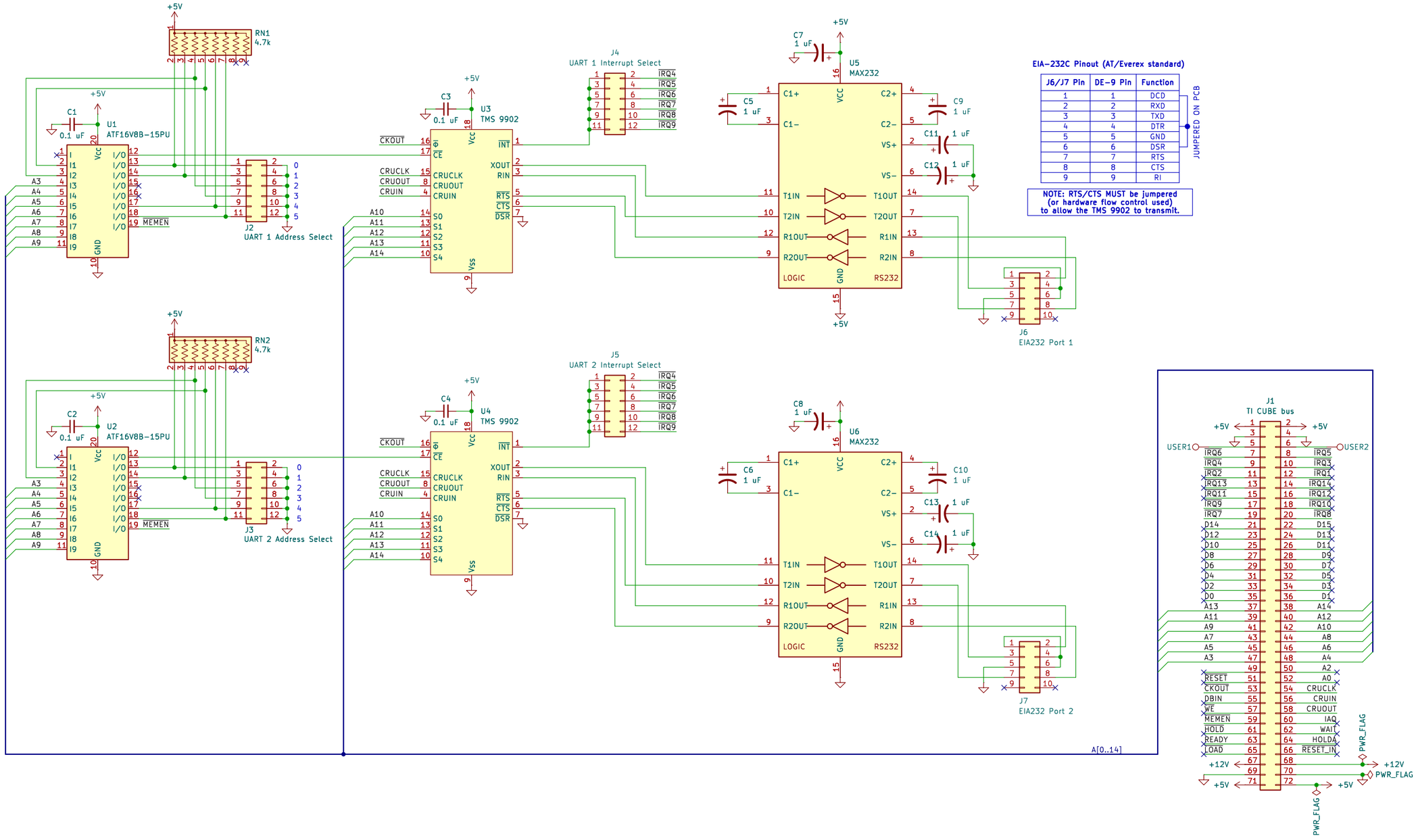

EIA-232C Pinout (AT/Everex standard)

J6/J7 Pin	DE-9 Pin	Function
1	1	DCD
2	2	RXD
3	3	TXD
4	4	DTR
5	5	GND
6	6	DSR
7	7	RTS
8	8	CTS
9	9	RI

JUMPERED ON PCB

NOTE: RTS/CTS MUST be jumpered (or hardware flow control used) to allow the TMS 9902 to transmit.

TI CUBE

Sheet: /
File: TI-CUBE-Serial-Interface.kicad_sch

Title: TI CUBE Serial Interface Board

Size: B	Date:	Rev: 1.1
KiCad E.D.A. 9.0.7		Id: 1/1