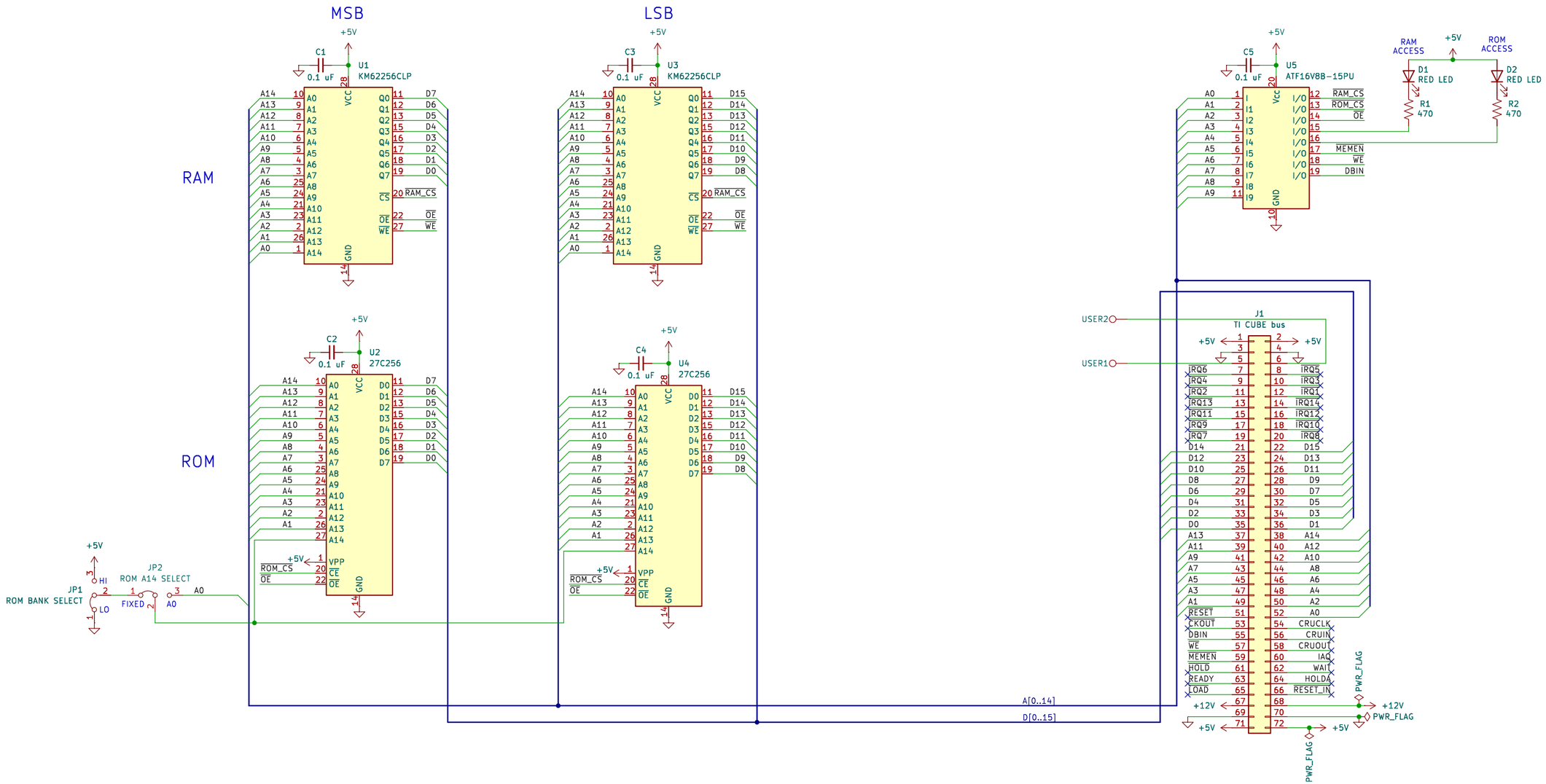

TI CUBE

Sheet: /
File: TI-CUBE-Memory.kicad_sch

Title: TI CUBE Memory Board

Size: B	Date:	Rev: 1.1
KiCad E.D.A. 9.0.7		Id: 1/1