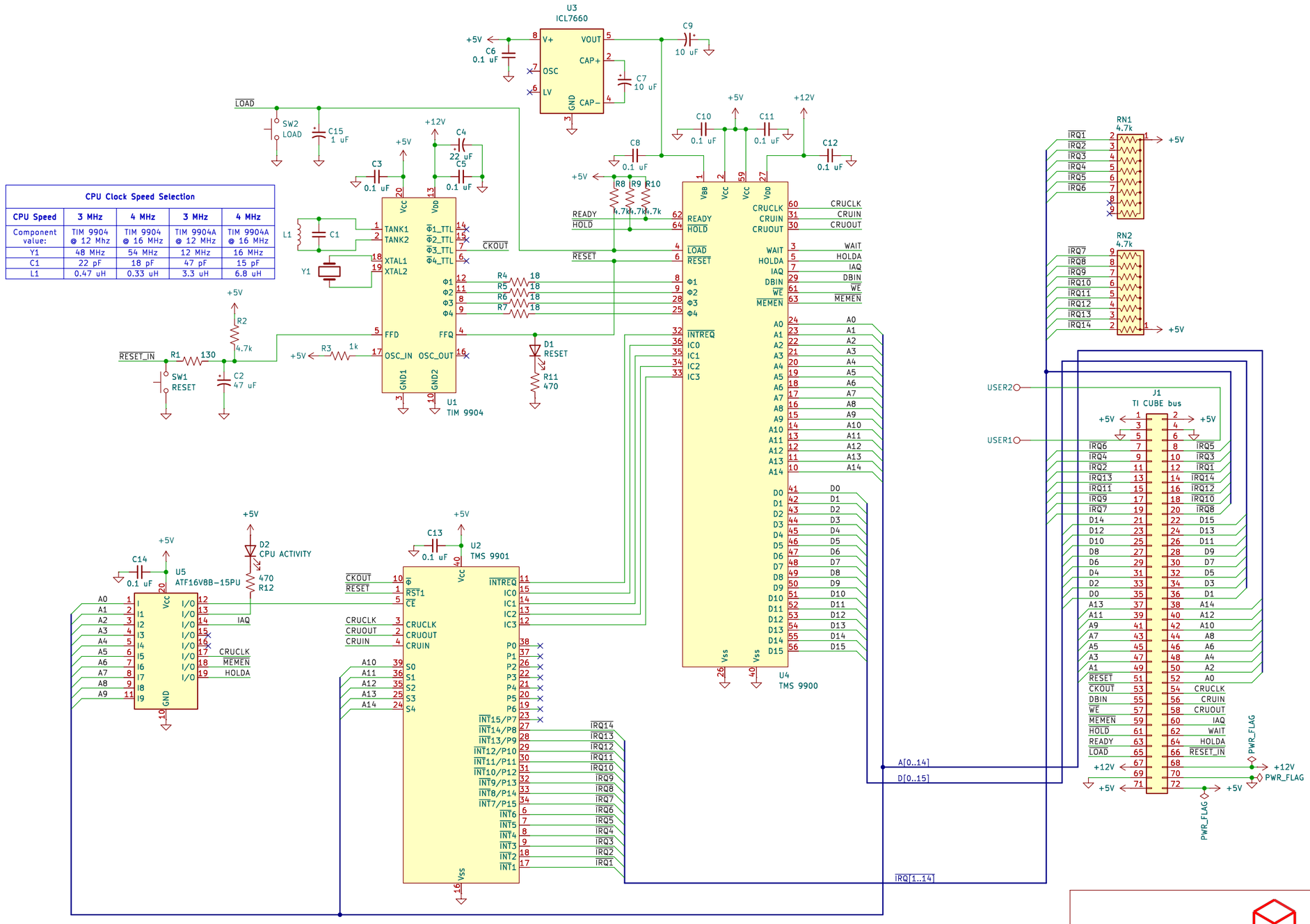

CPU Clock Speed Selection				
CPU Speed	3 MHz	4 MHz	3 MHz	4 MHz
Component value:	TIM 9904 @ 12 Mhz	TIM 9904 @ 16 MHz	TIM 9904A @ 12 MHz	TIM 9904A @ 16 MHz
Y1	48 MHz	54 MHz	12 MHz	16 MHz
C1	22 pF	18 pF	47 pF	15 pF
L1	0.47 uH	0.33 uH	3.3 uH	6.8 uH

TI CUBE

Sheet: /
File: TI-CUBE-CPU.kicad_sch

Title: TI Cube CPU Board

Size: B	Date:	Rev: 1.1
KiCad E.D.A. 9.0.7		Id: 1/1