STRUCTURAL DRAWING INDEX

DRG NO.	SHEET TITLE	REV
BELLEVUE DEPOT		
12-A-152-ST0001	COVER SHEET	0
12-A-152-ST0002	DRAWING INDEX	1
12-A-152-ST0003	STANDARD NOTES - SHEET 1 OF 2	0
12-A-152-ST0004	STANDARD NOTES - SHEET 2 OF 2	1
12-A-152-ST0010	STANDARD CONCRETE DETAILS - SHEET 1 OF 3	0
12-A-152-ST0011	STANDARD CONCRETE DETAILS - SHEET 2 OF 3	0
12-A-152-ST0021	STANDARD STEELWORK DETAILS - SHEET 1 OF 5	0
12-A-152-ST0022	STANDARD STEELWORK DETAILS - SHEET 2 OF 5	0
12-A-152-ST0023	STANDARD STEELWORK DETAILS - SHEET 3 OF 5	0
12-A-152-ST0024	STANDARD STEELWORK DETAILS - SHEET 4 OF 5	0
12-A-152-ST0025	STANDARD STEELWORK DETAILS - SHEET 5 OF 5	0
12-A-152-ST0031	STANDARD STAIR DETAILS - SHEET 1 OF 1	0
ASSEMBLY FACILITY		
12-A-152-ST0040	STANDARD PC CONCRETE DETAILS	0
12-A-152-ST0041	PRECAST PANEL ELEVATIONS	1
12-A-152-ST0045	PC CONCRETE CONNECTION DETAILS	0
12-A-152-ST0070	TRIMMING DETAILS	0
12-A-152-ST0095	LOADING DIAGRAM PLAN	0
12-A-152-ST0100	OVERALL FOOTING AND GROUND FLOOR PLAN	0
12-A-152-ST0101	FOOTING AND GROUND FLOOR PLAN - ZONE 01	0
12-A-152-ST0102	FOOTING AND GROUND FLOOR PLAN - ZONE 02	0
12-A-152-ST0103	FOOTING AND GROUND FLOOR PLAN - ZONE 03	0
12-A-152-ST0104	FOOTING AND GROUND FLOOR PLAN - ZONE 04	0
12-A-152-ST0105	FOOTING AND GROUND FLOOR PLAN - ZONE 05	0
12-A-152-ST0106	FOOTING AND GROUND FLOOR PLAN - ZONE 06	0
12-A-152-ST0107	FOOTING AND GROUND FLOOR PLAN - ZONE 07	0
12-A-152-ST0108	FOOTING AND GROUND FLOOR PLAN - ZONE 08	0
12-A-152-ST0110	BIKE SHED FLOOR PLAN - ZONE 08	0
12-A-152-ST0120	CRANE BEAM PLAN	0
12-A-152-ST0130	OVERALL ROOF FRAMING PLAN	0
12-A-152-ST0131	ROOF FRAMING PLAN - ZONE 01	0
12-A-152-ST0132	ROOF FRAMING PLAN - ZONE 02	0
12-A-152-ST0133	ROOF FRAMING PLAN - ZONE 03	0
12-A-152-ST0134	ROOF FRAMING PLAN - ZONE 04	0
12-A-152-ST0135	ROOF FRAMING PLAN - ZONE 05	0
12-A-152-ST0136	ROOF FRAMING PLAN - ZONE 06	0
12-A-152-ST0137	ROOF FRAMING PLAN - ZONE 07	0
12-A-152-ST0138	ROOF FRAMING PLAN - ZONE 08	0
12-A-152-ST0140	ADMIN ROOF FRAMING PLAN - ZONE 04	0
12-A-152-ST0151	NORTH ELEVATION - ZONE 04	0
12-A-152-ST0152	NORTH ELEVATION - ZONE 03	0
12-A-152-ST0153	NORTH ELEVATION - ZONE 02	0
12-A-152-ST0154	NORTH ELEVATION - ZONE 01	0
12-A-152-ST0156	SOUTH ELEVATION - ZONE 05	0
12-A-152-ST0157	SOUTH ELEVATION - ZONE 06	0
12-A-152-ST0158	SOUTH ELEVATION - ZONE 07	0
12-A-152-ST0159	SOUTH ELEVATION - ZONE 08	0
12-A-152-ST0160	WEST & EAST ELEVATIONS	0
12-A-152-ST0162	ELEVATION ON GRID C - ZONE 01 & 02	0
12-A-152-ST0163	WALL ELEVATION GRID C - ZONE 03 & 04	0
12-A-152-ST0165	BUILDING SECTIONS - SHEET 1 OF 5	0
12-A-152-ST0166	BUILDING SECTIONS - SHEET 2 OF 5 SHEET 2 OF 5	0
12-A-152-ST0167	BUILDING SECTIONS - SHEET 3 OF 5 SHEET 3 OF 5	0
12-A-152-ST0168	BUILDING SECTIONS - SHEET 4 OF 5 SHEET 4 OF 5	0
12-A-152-ST0169	BUILDING SECTIONS - SHEET 5 OF 5 SHEET 5 OF 5	0
12-A-152-ST0171	SECTIONS & DETAILS	0
12-A-152-ST0172	SECTIONS & DETAILS	0
12-A-152-ST0173	SECTIONS & DETAILS	0
12-A-152-ST0174	SECTIONS & DETAILS	0
12-A-152-ST0176	PEDESTAL DETAILS	0
12-A-152-ST0177	SECTIONS & DETAILS - SHEET 1 OF 4	0
12-A-152-ST0178	SECTIONS & DETAILS - SHEET 2 OF 4	0
12-A-152-ST0180	SECTIONS & DETAILS - SHEET 3 OF 4	0
12-A-152-ST0181	SECTIONS & DETAILS - SHEET 4 OF 4	0
12-A-152-ST0184	STEELWORK DETAILS - SHEET 1 OF 4	0
12-A-152-ST0185	STEELWORK DETAILS - SHEET 2 OF 4	0
12-A-152-ST0186	STEELWORK DETAILS - SHEET 3 OF 4	0
12-A-152-ST0187	STEELWORK DETAILS - SHEET 4 OF 4	0
12-A-152-ST0188	GENERAL CRANE BEAM FRAMING DETAILS	0
12-A-152-ST0189	GENERAL CRANE BEAM DETAILS	0
12-A-152-ST0190	3D VIEW - SHEET 1 OF 7	0
12-A-152-ST0191	3D VIEWS - SHEET 2 OF 7	0
12-A-152-ST0195	3D VIEWS - SHEET 3 OF 7	0
12-A-152-ST0196	3D VIEWS - SHEET 4 OF 7	0
12-A-152-ST0197	3D VIEWS - SHEET 5 OF 7	0
12-A-152-ST0198	3D VIEWS - SHEET 6 OF 7	0
12-A-152-ST0199	3D VIEWS - SHEET 7 OF 7	0

STRUCTURAL DRAWING INDEX

DRG NO.	SHEET TITLE	REV
HV TESTING FACILITY		
12-A-152-ST0201	LOADING DIAGRAM PLAN	0
12-A-152-ST0210	FOOTING AND GROUND FLOOR PLAN	0
12-A-152-ST0211	FOOTING AND GROUND FLOOR PLAN - ZONE 01	0
12-A-152-ST0212	FOOTING AND GROUND FLOOR PLAN - ZONE 02	0
12-A-152-ST0213	FOOTING AND GROUND FLOOR PLAN - ZONE 03	0
12-A-152-ST0220	ELEVATED PLATFORM PLAN	0
12-A-152-ST0221	ELEVATED PLATFORM PLAN - ZONE 01	0
12-A-152-ST0222	ELEVATED PLATFORM PLAN - ZONE 02	0
12-A-152-ST0223	ELEVATED PLATFORM PLAN - ZONE 03	0
12-A-152-ST0230	ROOF FRAMING PLAN	0
12-A-152-ST0231	ROOF FRAMING PLAN - ZONE 01	0
12-A-152-ST0232	ROOF FRAMING PLAN - ZONE 02	0
12-A-152-ST0233	ROOF FRAMING PLAN - ZONE 03	0
12-A-152-ST0250	NORTH ELEVATION	0
12-A-152-ST0251	NORTH ELEVATION - ZONE 01	0
12-A-152-ST0252	NORTH ELEVATION - ZONE 02	0
12-A-152-ST0253	NORTH ELEVATION - ZONE 03	0
12-A-152-ST0254	SOUTH ELEVATION	0
12-A-152-ST0255	SOUTH ELEVATION - ZONE 01	0
12-A-152-ST0256	SOUTH ELEVATION - ZONE 02	0
12-A-152-ST0257	SOUTH ELEVATION - ZONE 03	0
12-A-152-ST0258	WEST AND EAST ELEVATIONS	0
12-A-152-ST0260	BUILDING SECTIONS - SHEET 1 OF 1	0
12-A-152-ST0261	PLATFORM DETAILS	0
12-A-152-ST0270	SECTIONS AND DETAILS - SHEET 1 OF 7	0
12-A-152-ST0271	SECTIONS AND DETAILS - SHEET 2 OF 7	0
12-A-152-ST0272	SECTIONS AND DETAILS - SHEET 3 OF 7	0
12-A-152-ST0273	SECTIONS AND DETAILS - SHEET 4 OF 7	0
12-A-152-ST0274	STANDARD PC CONCRETE DETAILS	0
12-A-152-ST0279	SECTIONS AND DETAILS - SHEET 6 OF 7	0
12-A-152-ST0280	SECTIONS AND DETAILS - SHEET 6 OF 7	0
12-A-152-ST0281	SECTIONS AND DETAILS - SHEET 7 OF 7	0
12-A-152-ST0290	3D IMAGE - SHEET 1 OF 7 - GROUND	0
12-A-152-ST0291	3D IMAGE - SHEET 2 OF 7 - OVERALL BUILDING	0
12-A-152-ST0292	3D IMAGE - SHEET 3 OF 7 - OVERALL BUILDING	0
12-A-152-ST0293	3D IMAGE - SHEET 4 OF 7 - ZONE 01	0
12-A-152-ST0294	3D IMAGE - SHEET 5 OF 7 - ZONE 02	0
12-A-152-ST0295	3D IMAGE - SHEET 6 OF 7 - ZONE 03	0
12-A-152-ST0296	3D IMAGE - SHEET 7 OF 7 - SECTIONS	0

USE OF THESE DRAWINGS

1. THIS DRAWING SHALL BE READ IN CONJUNCTION WITH THE DISCIPLINE CONTRACT SPECIFICATION AND OTHER PROJECT DOCUMENTS.
2. INFORMATION SHOWN ON THIS DRAWING SHALL NOT BE USED FOR CONSTRUCTION PURPOSES. THE DRAWINGS AND SPECIFICATIONS DO NOT PURPORT TO SHOW ALL MINOR ITEMS OF EQUIPMENT AND ACCESSORIES WHICH MAY BE NECESSARY. THESE MINOR ITEMS SHALL BE PROVIDED TO FORM COMPLETE AND FULLY OPERATIONAL SYSTEMS.
3. THE CONTRACTORS SHALL BE FULLY AWARE OF THE OTHER INTERFACING PACKAGES AND SHALL HAVE DEEMED TO HAVE INCLUDED INTER-TRADE INTERFACES. THE INTERFACES IDENTIFIED IN THE DOCUMENTATION ARE TO INDICATE AN INTENT AND ARE NOT INTENDED TO BE EXHAUSTIVE. MAKE ALLOWANCES AS REQUIRED.

ISSUED FOR CONSTRUCTION

REV	DATE	AMENDMENT	DSN	DRN	CHKD	APP
1	01.10.19	ISSUED FOR CONSTRUCTION	J.B.	A.C.D.	M.P.	D.W.
0	30.08.19	ISSUED FOR CONSTRUCTION	J.B.	A.C.D.	M.P.	G.B.

ORIG SIZE A1

0 10 20 30 40 50 100mm

SCALE 1:1 AT A1

This document must not be copied without PTA's written permission, and the contents thereof must not be imparted to a third party nor be used for any unauthorised purpose.

aurecon

www.aurecongroup.com

505695-0000-DRG-ST-1002

REFERENCES

SCALE : (@ A1)

DATUM :
HORIZONTAL: PCG94
VERTICAL: AHD71

PTA ACCEPTANCE STAMP

DESIGNED J.BRUINS
DRAWN A.DAWSON
CHECKED M.PEARCE
APPROVED FOR ISSUE
G.BENTLEY
DATE

Government of Western Australia Public Transport Authority

DETAILED DESIGN FOR THE BELLEVUE DEPOT

BELLEVUE DEPOT
STRUCTURAL
DRAWING INDEX

PTA Drawing No: 12-A-152-ST0002 REV : 1

Plot Date: 10/1/2019 2:29:42 PM Office: Filename: BIM 360://505695 - Bellevue Depot/505695-ST-BELLEVUE DEPOT-00.rvt

STRUCTURAL STEELWORK NOTES

1. ALL WORKMANSHIP AND MATERIALS SHALL BE IN ACCORDANCE WITH AS4100, AS/NZ 4600, AS/NZS 1554 AND AS/NZS HB62 EXCEPT WHERE VARIED BY THE CONTRACT DOCUMENTS.

2. UNLESS NOTED OTHERWISE, ALL STEEL SHALL BE:
   GRADE 300 PLUS FOR HOT ROLLED SECTIONS
   GRADE 300 PLUS FOR WELDED SECTIONS (WB, WC)
   GRADE 300 PLUS FOR MERCHANT BAR (ROUND, SQUARE AND FLAT)
   GRADE 250 FOR PLATES
   GRADE C350 FOR RHS, SHS AND CHS

3. COMMERCIAL GRADE BOLTS SHALL CONFORM TO AS/NZS 1111 AND AS4100. HIGH STRENGTH STRUCTURAL BOLTS SHALL CONFORM TO AS/NZ 1252 AND AS4100. WELDS SHALL CONFORM TO AS/NZS 1554 AND WELDING ELECTRODES SHALL BE EITHER TO AS/NZS 1553, AS 1858, AS 2203 OR AS 2717 AS APPROPRIATE.

   THE INSPECTION/TESTING OF WELDS SHALL BE IN ACCORDANCE WITH THE STRUCTURAL STEEL SPECIFICATION.

4. ALL DETAILS, GAUGE LINES, ETC, WHERE NOT SPECIFICALLY SHOWN ARE TO BE IN ACCORDANCE WITH AISC DESIGN CAPACITY TABLES FOR STRUCTURAL STEEL AND AISC STANDARDISED STRUCTURAL CONNECTIONS.

5. BEFORE FABRICATION IS COMMENCED THE CONTRACTOR SHALL SUBMIT COPIES OF THE SHOP DRAWINGS TO THE SUPERINTENDENT FOR REVIEW. REVIEW DOES NOT INCLUDE CHECKING OF DIMENSIONS. 10 WORKING DAYS SHALL BE REQUIRED FOR THE REVIEW.

6. ALL WELDS SHALL BE SP (SPECIAL PURPOSE) IN ACCORDANCE WITH AS1554. ALL BUTT WELDS SHALL BE FULL STRENGTH COMPLETE PENETRATION WELDS. ALL ELECTRODES SHALL BE CLASS E49xx/W50 WITH NOMINAL TENSILE STRENGTH OF WELD METAL fuw = 490 mPa. THE EXTENT OF NON-DESTRUCTIVE WELD EXAMINATION SHALL BE AS NOTED BELOW (UNLESS NOTED OTHERWISE) RADIOGRAPHIC OR ULTRASONIC EXAMINATION SHALL BE TO AS/NZS 1554.1, AS 2177.1 AND AS 2207 AS APPROPRIATE.

TYPE OF WELD AND CATEGORY	EXAMINATION METHOD	EXTENT (% OF TOTAL LENGTH OF WELD TYPE)
FILLET WELDS (GP + SP)	VISUAL INSPECTION	100
BUTT WELDS (GP)	VISUAL INSPECTION	100
BUTT WELDS (SP)	VISUAL INSPECTION	100
BUTT WELDS (SP)	RADIOGRAPHIC OR ULTRASONIC	10

7. BOLT DESIGNATION:
   4.6/S REFERS TO COMMERCIAL BOLTS OF STRENGTH GRADE 4.6 TO AS1111 TIGHTENED TO A SNUG TIGHT CONDITION.
   8.8/S REFERS TO HIGH STRENGTH STRUCTURAL BOLTS OF GRADE 8.8 TO AS1252 TIGHTENED TO A SNUG TIGHT CONDITION.
   8.8/TB REFERS TO HIGH STRENGTH STRUCTURAL BOLTS OF GRADE 8.8 TO AS1252 FULLY TENSIONED TO AS4100 AS A BEARING JOINT (SOME SLIP ALLOWED).
   8.8/TF REFERS TO HIGH STRENGTH STRUCTURAL BOLTS OF GRADE 8.8 TO AS1252 FULLY TENSIONED TO AS4100 AS A FRICTION JOINT.

8. ALL BOLTS, NUTS AND WASHERS SHALL BE HOT DIP GALVANISED.

9. UNLESS SHOWN OTHERWISE ON THE DRAWINGS, ALL CONNECTIONS SHALL BE IN ACCORDANCE WITH THE FOLLOWING MINIMUM REQUIREMENTS:

   a) ALL WELDS SHALL BE 6mm CONTINUOUS FILLET WELDS ALL AROUND.
   b) ALL BOLTS SHALL BE M20 - 8.8/S, WITH A MINIMUM OF 2 BOLTS PER CONNECTION. PURLIN BOLTS TO BE M12 - 8.8/S WITH A MINIMUM OF 2 BOLTS PER PURLIN END.
   c) ALL GUSSET AND CLEAT PLATES SHALL BE 10mm THICK.
   d) ALL CAP PLATES SHALL BE 12mm THICK.
   e) ALL BASE PLATES SHALL BE 20mm THICK.

10. CONTACT SURFACES OF TF CONNECTIONS SHALL BE LEFT UNPAINTED AND FREE OF SCALE UNLESS OTHERWISE SPECIFIED (INORGANIC ZINC SILICATE PAINT IS ACCEPTABLE IN 8.8/TF JOINTS).

11. LOAD INDICATING WASHERS SHALL BE USED TO VERIFY TIGHTENING OF BOLTS IN TF AND TB CONNECTIONS. TORQUE WRENCHES SHALL NOT BE USED. A HARDENED WASHER SHALL BE USED UNDER THE BOLT HEAD OR NUT, WHICHEVER IS ROTATED. THE RE-USE OF FULLY TENSIONED BOLTS IS PROHIBITED.

12. COLUMNS AND MULLIONS SHALL HAVE THEIR BASE PLATES FULLY GROUTED IN ACCORDANCE WITH THE SPECIFICATIONS AFTER PLUMBING AND LEVELLING ON NEOPRENE PACKERS.

13. SUBSTITUTIONS FOR STEEL SECTIONS SHOWN ON DRAWINGS SHALL NOT BE MADE WITHOUT THE WRITTEN APPROVAL OF THE SUPERINTENDENT.

14. CONCRETE ENCASED STEELWORK SHALL HAVE A MINIMUM OF 50mm OF CONCRETE ENCASEMENT REINFORCED WITH W5 WIRE WRAPPING AT 150 CTS OR FGW41 FABRIC UNLESS NOTED OTHERWISE.

15. ALL STEELWORK BELOW GROUND OR FINISHED SURFACE LEVEL IS TO BE ENCASED IN 75mm MIN. CONCRETE ALL AROUND.

STRUCTURAL STEELWORK NOTES (CONT'D)

16. THE ENDS OF ALL TUBULAR MEMBERS ARE TO BE SEALED WITH NOMINAL THICKNESS PLATES AND CONTINUOUS FILLET WELDED UNLESS NOTED OTHERWISE.

17. ALL HOT DIP GALVANISED MEMBERS SHALL BE PROVIDED WITH VENT AND DRAINAGE HOLES IN ACCORDANCE WITH THE GALVANISER'S RECOMMENDATIONS AND TO THE ACCEPTANCE OF THE SUPERINTENDENT. ALL GALVANISING OF STRUCTURAL STEELWORK SHALL BE TO AS/NZS 4680. THE CONTINUOUS AVERAGE ZINC COATING MASS SHALL BE IN ACCORDANCE WITH THE SPECIFICATION BUT MIN 600g/m^2.

18. WHERE MEMBERS SHOWN ON THE STRUCTURAL OR ARCHITECTURAL DRAWINGS ARE REQUIRED TO BE CURVED, BENT OR ROLLED, THE CONTRACTOR SHALL BE RESPONSIBLE FOR THE METHODS REQUIRED TO ACHIEVE THE REQUIRED SHAPES WITHOUT LOCALISED DISTORTION OF THE MEMBERS.

19. THE CONTRACTOR SHALL PROVIDE AND LEAVE IN PLACE, UNTIL PERMANENT BRACING ELEMENTS ARE CONSTRUCTED, SUCH TEMPORARY BRACING AS IS NECESSARY TO STABILISE THE STRUCTURE DURING ERECTION.

20. THE PURLIN AND GIRT DESIGN HAS BEEN BASED ON LYSAGHT PURLINS, ALTERNATIVE PURLINS OF EQUAL OR GREATER LOAD CAPACITY MAY BE SUBSTITUTED ONLY WITH THE WRITTEN APPROVAL FROM THE SUPERINTENDENT.

21. PURLIN AND GIRT BOLTS AND BRIDGING SHALL BE IN ACCORDANCE WITH THE MANUFACTURER'S DETAILS UNLESS SHOWN OTHERWISE.

22. TRIMMING MEMBERS FOR MECHANICAL/HYDRAULIC PENETRATIONS ARE NOT NECESSARILY SHOWN.

23. TRIMMING MEMBERS FOR VALLEYS, FREE EDGES, RIDGES, ETC. ARE NOT NECESSARILY SHOWN, BUT SHALL BE PROVIDED AT NO ADDITIONAL COST TO ALL EDGES OF SHEETING AT AN ANGLE OF OTHER THAN 90 DEGREES TO THE PURLIN/GIRTS. REFER TO PURLIN MANUFACTURER FOR DETAILS.

24. THE CONTRACTOR SHALL PROVIDE ALL CLEATS AND DRILL ALL HOLES NECESSARY FOR FIXING STEEL, TIMBER AND OTHER ELEMENTS TO STEEL WHETHER OR NOT DETAILED ON THE STRUCTURAL DRAWINGS.

25. THE FABRICATION AND ERECTION OF THE STRUCTURAL STEELWORK SHALL BE SUPERVISED BY QUALIFIED PERSONNEL EXPERIENCED IN SUCH SUPERVISION TO ENSURE THAT ALL REQUIREMENTS OF OH&S AND THE DESIGN ARE MET. DETAILS OF ERECTION SEQUENCE SHALL BE SUBMITTED TO THE SUPERINTENDENT FOR REVIEW PRIOR TO COMMENCEMENT OF ERECTION. THE APPROVED ERECTION SEQUENCE SHALL NOT BE VARIED DURING THE ERECTION PROCESS WITHOUT THE APPROVAL OF THE SUPERINTENDENT.

26. STRUCTURAL STEELWORK SHALL HAVE SURFACE TREATMENT NOMINTATED BY CONTRACTOR IN ACCORDANCE WITH AS/NZS 2312 AND THE SPECIFICATION, REFER ALSO ARCHITECTURAL DOCUMENTATION. MEMBERS TO BE ENCASED IN CONCRETE OR FIRE SPRAYED MUST NOT BE PAINTED AND MUST BE FREE OF SCALE.

27. CAMBERS:
   ALL RAFTERS AND BEAMS OVER 6000mm IN LENGTH SHALL BE CAMBERED 5mm UPWARDS FOR EVERY 2000mm OF LENGTH UNLESS NOTED OTHERWISE ON THE DRAWINGS. ALL BEAMS AND RAFTERS SHALL BE FABRICATED AND ERECTED WITH NATURAL CAMBER UP. REFER TO DRAWINGS FOR OTHER CAMBER REQUIREMENTS.

28. ALL MEMBERS SHALL BE SUPPLIED IN SINGLE LENGTHS. SPLICES SHALL ONLY BE PERMITTED IN LOCATIONS SHOWN ON THE STRUCTURAL DRAWINGS.

29. ALL STEELWORK FABRICATION SHALL BE CARRIED OUT BY COMPANIES CERTIFIED IN ACCORDANCE WITH THE NATIONAL STRUCTURAL STEELWORK COMPLIANCE SCHEME.

30. ALL STRUCTURAL STEEL, ASSOCIATED COMPONENTS AND WELDING CONSUMABLES SHALL BE MANUFACTURED BY COMPANIES ACCREDITED TO AS9001 WHICH HOLD A VALID CERTIFICATE OF APPROVAL ISSUED BY THE AUSTRALIAN CERTIFICATION AUTHORITY FOR REINFORCING AND STRUCTURAL STEELS (ACERS) OR APPROVED EQUIVALENT.

31. ALL STEELWORK FABRICATION AND ERECTION SHALL BE CARRIED OUT IN ACCORDANCE WITH AS/NZS 5131 UNLESS NOTED OTHERWISE, ALL STEELWORK SHALL BE CONSTRUCTION CATEGORY CC2, TREATMENT GRADE P2, WITH FULL TRACEABILITY.

32. FOR STEELWORK CORROSION PROTECTION SYSTEMS THE COATING LIFE TO FIRST MAJOR MAINTENANCE SHALL BE GREATER THAN 25 YEARS CORRESPONDING TO THE EXTRA LONG TERM RANGE DEFINED IN CLAUSE 1.6 OF AS2312. ATMOSPHETRIC CORROSIVITY CATEGORY C3: MEDIUM AS DEFINED IN CLAUSE 2.3 OF AS2312 SHALL APPLY TO ALL STEELWORK PROTECTION CORROSION SYTEMS

PRECAST CONCRETE NOTES

1. ALL WORKMANSHIP AND MATERIALS SHALL BE IN ACCORDANCE WITH AS3600 EXCEPT AS VARIED BY THE CONTRACT DOCUMENTS.

2. PRECAST CONCRETE IS TO BE IN ACCORDANCE WITH THE "NATIONAL CODE OF PRACTICE FOR PRECAST, TILT-UP AND CONCRETE ELEMENTS IN CONSTRUCTION".

3. FOR LOCATIONS AND NON-STRUCTURAL DIMENSIONS OF PRECAST PANELS REFER TO ARCHITECTURAL DRAWINGS.

4. PANELS ARE TO CONSIST OF OFF FORM CONCRETE POURED IN APPROVED MOULDS AS SPECIFIED. FINISH AS SPECIFIED BY THE ARCHITECT.

5. THE CONCRETE IN THE PANELS IS TO HAVE A CHARACTERISTIC STRENGTH f'c AS SPECIFIED ON THE DRAWINGS. THE CONCRETE STRENGTH AT REMOVAL FROM MOULDS IS TO BE A MINIMUM OF 20MPa. ALL PANELS ARE TO BE CONSTRUCTED FROM NORMAL WEIGHT CONCRETE.

6. ALL CORBELS TO THE PRECAST PANELS TO BE POURED MONOLITHICALLY WITH THE PANEL.

7. WATER CEMENT RATIO = NOT TO EXCEED 0.45
   SLUMP = NOT TO EXCEED 50mm

8. CALCIUM CHLORIDE WILL UNDER NO CIRCUMSTANCES BE PERMITTED, AND OTHER ADMIXTURES WILL ONLY BE PERMITTED WITH THE WRITTEN CONSENT OF THE SUPERINTENDENT.

9. ACID ETCHING WILL UNDER NO CIRCUMSTANCES BE PERMITTED, ACID CLEANING WITH DILUTE HYDROCHLORIC ACID OF MAXIMUM CONCENTRATIONOF 20 TO 1 MAY BE PERMITTED UNDER CONTROLLED CONDITIONS IF THE CHLORIDE ION PENETRATION AND CONCENTRATION IS WITHIN ACCEPTABLE LIMITS. HIGH PRESSURE WATER JETS ARE TO BE USED TO REMOVE ALL TRACES OF ACID FROM THE SURFACE. FULL DETAILS OF PROPOSED CLEANING PROCEDURE IS TO BE SUBMITTED TO THE SUPERINTENDENT FOR WRITTEN APPROVAL PRIOR TO CLEANING.

10. THE MAXIMUM TOTAL CHLORIDE ION CONTENT BY MASS OF CEMENT IS NOT TO EXCEED 0.1%. CHEMICAL TEST RESULTS ON TRIAL PANELS TREATED IN THE INTENDED MANNER HALL BE SUBMITTED TO THE SUPERINTENDENT AND APPROVAL GAINED PRIOR TO MANUFACTURE.

11. VENEERED CONSTRUCTION AND/OR USE OF DIFFERENT CONCRETE MIX AND/OR USE OF DIFFERENT CONCRETE SUPPLIERS IS NOT PERMITTED.

12. DETAILS OF ALL SURFACE TREATMENTS ARE TO BE SUBMITTED TO THE PERINTENDENT FOR WRITTEN APPROVAL PRIOR TO MANUFACTURE.

13. CONCRETE COVER SHALL BE AS NOTED ON THE DRAWINGS OR EXPOSED FACE AND INTERNAL FACE 25mm, WHICHEVER IS THE GREATER, TOLERANCE + 5mm, - 0mm UNLESS NOTED OTHERWISE.

14. LIFTING FERRULES ARE TO BE DESIGNED AND DETAILED BY THE PRECAST MANUFACTURER TO SUIT THE METHOD OF PRECAST MANUFACTURE AND ERECTION.

15. TYPICAL LIFTING FERRULES ARE TO BE AT LEAST 24mm DIA, HOT DIPPED GALVANISED STEEL FERRULES FITTED WITH A "J" BAR ANCHOR CAPABLE OF DEVELOPING AT LEAST THE FULL DESIGN CAPACITY OF THE BOLT. LIFTING FERRULES ARE NOT SHOWN ON DESIGN DRAWINGS.

16. LIFTING FIXINGS SHALL NOT BE LOCATED IN THE FACE WHICH IS EXPOSED TO VIEW IN THE FINAL CONDITION AND AFTER USE SHALL BE PROTECTED TO AVOID CORROSION AND STAINING.

17. FERRULES THAT WOULD BE EXPOSED ON COMPLETION OF ERECTION ARE TO BE SET 25mm BELOW FINISHED LEVEL AND THE RECESS TO BE GROUTED ON COMPLETION.

18. ALL CONNECTION MEMBERS AND FIXINGS ARE TO BE HOT DIPPED GALVANISED.

19. CLOSED CELL POLYETHYLENE FOAM ROD COMPRESSION SEALS (25% MIN. COMPRESSION) OR APPROVED EQUIVALENT TO BE USED AS SHOWN IN DETAILS TO CONTAIN IN-SITU GROUT AND TO EXCLUDE CONCRETE SCREED IN JOINTS BETWEEN PANEL AND IN-SITU FLOOR.

20. FOR DETAILS OF FIRE PROTECTION AND WEATHERPROOFING OF JOINTS REFER TO ARCHITECT'S DRAWINGS.

21. PRECAST MANUFACTURER TO PROVIDE FOUR SETS OF FULLY DETAILED SHOP DRAWINGS INCLUDING DETAILS OF ALL INSERTS, FIXINGS, ANCHORS, BOLTS, FERRULES, PENETRATIONS, LIFTING DEVICES, ETC. TO THE SUPERINTENDENT FOR APPROVAL.

22. THE CONTRACTOR IS TO PROVIDE TEMPORARY SUPPORTS DURING THE ERECTION OF THE PRECAST PANELS AS REQUIRED TO ENSURE STABILITY OF THE PRECAST UNITS UNTIL THE PERMANENT FIXINGS BOTH TOP AND BOTTOM HAVE BEEN INSTALLED.

23. GROUT TO BE USED SHALL BE NON-SHRINK AND HAVE A 28 DAY CHARACTERISTIC STRENGTH OF 60 MPa. UNLESS NOTED OTHERWISE ON THE DRAWINGS.

PRECAST CONCRETE NOTES - CONTINUED

24. THE PRECAST PANELS HAVE BEEN DESIGNED FOR IN SERVICE CONDITIONS ONLY (IE. LOADS THE PRECAST PANELS ARE SUBJECTED TO AFTER ERECTION ON SITE).

25. THE PRECAST MANUFACTURER IS TO PROVIDE COMPUTATIONS TO THE SUPERINTENDENT FOR REVIEW OF STRESSES INDUCED DURING REMOVAL FROM THE MOULD, HANDLING, LIFTING, TRANSPORTATION AND ERECTION. ADDITIONAL REINFORCEMENT REQUIRED FOR THESE CONDITIONS IS THE RESPONSIBILITY OF THE PRECAST MANUFACTURER AND SHALL BE ALLOWED FOR IN THE TENDER.

26. PANELS CALLED UP AS SIMILAR ARE ONLY STRUCTURALLY SIMILAR, ARCHITECTURAL DIFFERENCES SUCH AS DIMENSIONS, GROOVES, REBATES, FERRULES, MINOR PENETRATIONS, ETC. MAY EXIST BETWEEN PANELS WHICH ARE STRUCTURALLY SIMILAR, REFER ARCHITECTS DRAWINGS FOR DETAILS.

EARTHING AND BONDING

1. ALL BONDING SHALL BE IN ACCORDANCE WITH THE PTA SPECIFICATION 8880-900-677. - EARTHING AND BONDING IN THE 25Kv a.c. ELECTRIFIED AREA - AS WELL AS THE EARTHING AND BONDING DOCUMENTATION FOR THE SITE.

2. THESE DRAWING SHALL BE READ IN CONJUNCTION WITH ALL OTHER PACKAGE DRAWINGS WHERE EARTHING AND BONDING IS REQUIRED. THE CONTRACTOR SHALL UNDERTAKE TESTING AT PACKAGE INTERFACE POINTS FOR TESTING OF ELECTRICAL CONTINUITY BETWEEN CONDUCTIVE PATHS.

3. OVERHEAD CONTACTLINE ZONE (4 METRES FROM TRACK CENTRE) DEFINES THE EXTENT FROM WHICH STRUCTURES AND TRACKSIDE EQUIPMENT COULD POTENTIALLY BECOME LIVE THROUGH ACCIDENTAL DAMAGE OF AND CONTACT WITH THE 25KV RAIL CONDUCTOR. THE WORKSHOP FLOOR IS TO BE PROVIDED WITH A EARTHING GRID OF STEEL REINFORCEMENT BAR (RE-BARS) AS STRUCTURE EARTH WHICH CONNECTS TO THE EARTH COLLECTOR CABINET (ECC) OF EACH BUILDING.

4. ALL WELDING OF RE-BARS USED FOR STRUCTURE EARTH SHALL BE ACHIEVED BY AN EXOTHERMIC BOND OR ELECTRICAL WELD TO AS1554 OR AS4100. EVERY TRACK SHALL BE PROVIDED WITH LONGITUDUNAL EARTHING RE-BARS WITH A TOTAL COMBINED CROSS SECTION OF. THIS CORRESPONDS TO 4 NO. 16MM DIA. BARS. A 16mm DIA BAR MUST BE WELDED PERPENDICULAR TO THE LONGITUDIONAL BARS. REFER PTA SPECIFICATION 8880-900-677 SECTION 8.12.1 AND 5.3.1 FOR DETAIL.

5. REINFORCEMENT EARTHING / CONNECTING BARS PROVIDED TO ACHIEVE CONTINUITY WITH STRUCTURAL STEEL MEMBERS OR REINFORCEMENT FOR CONDUCTIVE FAULT PATHS SHALL BE MINIMUM 12MM DIAMETER AND PREFERABLY COGGED (EITHER N OR Z BARS WITH A MINIMUM COG LENGTH OF 150MM) WITH MINIMUM 100MM CONTINUOUS FILLET WELDED AT EACH END, REFER TO PTA SPECIFICATION 8880-900-677 SECTION 5.3.2 FOR DETAILS.

6. WHERE STEEL REINFORCEMENT FOR THE PURPOSE OF A CONDUCTIVE FAULT PATH IS PROJECTING FROM A PREVIOUS INSITU OR PRECAST CONCRETE ELEMENT, THE DESIGNATED FAULT BAR SHALL BE CLEARLY IDENTIFIED TO PROVIDE CONTINUITY OF THE CONDUCTIVE FAULT PATH.

7. THE MAXIMUM COVER TO THE UPPER SURFACE OF ANY GROUND OR WALL REINFORCEMENT WHERE BONDED TO TRACTION EARTH SHOULD NOT BE GREATER THAN 100MM BELOW THE EXPOSED SURFACE.

8. THE CONDUCTIVE INTERCONNECTED REINFORCEMENT OF STEEL-REINFORCED CONCRETE STRUCTURES AND THE METALLIC COMPONENTS OF OTHER STRUCTURES ARE DESIGNATED AS STRUCTURE EARTH.

9. A M16 GROUND PLATE CONNECTING THE FLOOR RE-BAR IS PROVIDED AT NORTH-WEST CORNER OF THE ASSEMBLY BUILDING AND HV TESTING FACILITY TO FACILITATE THE BONDING OF STRUCTURE EARTH TO THE BUILDINGS' EARTHING COLLECTION CABINET VIA A BONDING CABLE BY OTHERS.

10. A M16 THREADED STUD MUST BE WELDED TO THE STRUCTURAL STEEL AT THE NORTH-WEST CORNER OF THE ASSEMBLY BUILDING TO FACILITATE THE BONDING OF BUILDING STRUCTURE TO THE BUILDING'S EARTHING COLLECTION CABINET VIA A BONDING CABLE BY OTHERS.

11. THE EMBEDDED BONDING CONDUCTORS / REINFORCEMENT EARTHING BARS ARE TO BE INSPECTED DURING THE CONSTRUCTION PHASE IN COMPLIANCE WITH PTA SPECIFICATION 8880-900-677.

USE OF THESE DRAWINGS

1. THIS DRAWING SHALL BE READ IN CONJUNCTION WITH THE DISCIPLINE CONTRACT SPECIFICATION AND OTHER PROJECT DOCUMENTS.
2. INFORMATION SHOWN ON THIS DRAWING SHALL NOT BE USED FOR CONSTRUCTION PURPOSES. THE DRAWINGS AND SPECIFICATIONS DO NOT PURPORT TO SHOW ALL MINOR ITEMS OF EQUIPMENT AND ACCESSORIES WHICH MAY BE NECESSARY. THESE MINOR ITEMS SHALL BE PROVIDED TO FORM COMPLETE AND FULLY OPERATIONAL SYSTEMS.
3. THE CONTRACTORS SHALL BE FULLY AWARE OF THE OTHER INTERFACING PACKAGES AND SHALL HAVE DEEMED TO HAVE INCLUDED INTER-TRADE INTERFACES. THE INTERFACES IDENTIFIED IN THE DOCUMENTATION ARE TO INDICATE AN INTENT AND ARE NOT INTENDED TO BE EXHAUSTIVE. MAKE ALLOWANCES AS REQUIRED.

ISSUED FOR CONSTRUCTION

REV	DATE	AMENDMENT	DSN	DRN	CHKD	APP
1	27.09.19	ISSUED FOR CONSTRUCTION	J.S.	A.C.D.	M.P.	D.W.
0	30.08.19	ISSUED FOR CONSTRUCTION	J.B.	A.C.D.	M.P.	G.B.

ORIG SIZE A1

0 10 20 30 40 50 100mm
SCALE 1:1 AT A1

This document must not be copied without PTA's written permission, and the contents thereof must not be imparted to a third party nor be used for any unauthorised purpose.

aurecon
www.aurecongroup.com

505695-0000-DRG-ST-1004

REFERENCES

SCALE : 1 : 1 (@ A1)
DATUM :
HORIZONTAL: PCG94
VERTICAL: AHD71
PTA ACCEPTANCE STAMP

DESIGNED J.BRUINS
DRAWN A.DAWSON
CHECKED M.PEARCE
APPROVED FOR ISSUE
G.BENTLEY
DATE

Government of Western Australia Public Transport Authority
DETAILED DESIGN FOR THE BELLEVUE DEPOT

BELLEVUE DEPOT
STRUCTURAL
STANDARD NOTES - SHEET 2 OF 2

PTA Drawing No: 12-A-152-ST0004 REV : 1

Plot Date: 9/26/2019 9:17:49 AM Office: Filename: BIM 360://505695 - Bellevue Depot/505695-ST-BELLEVUE DEPOT-00.rvt

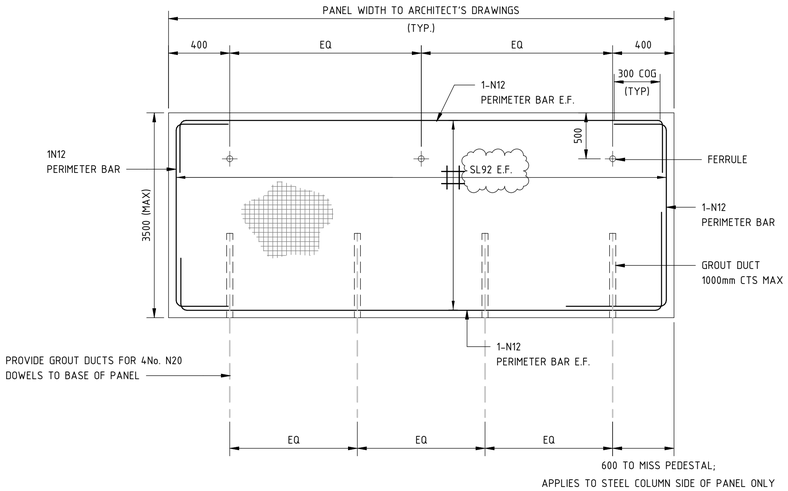

TYPICAL PANEL TYPE "PC01"

PRECAST PANEL: 150 STRUCTURAL THICKNESS

- BASE CONNECTION: PCN01
- TOP CONNECTION: PCN02

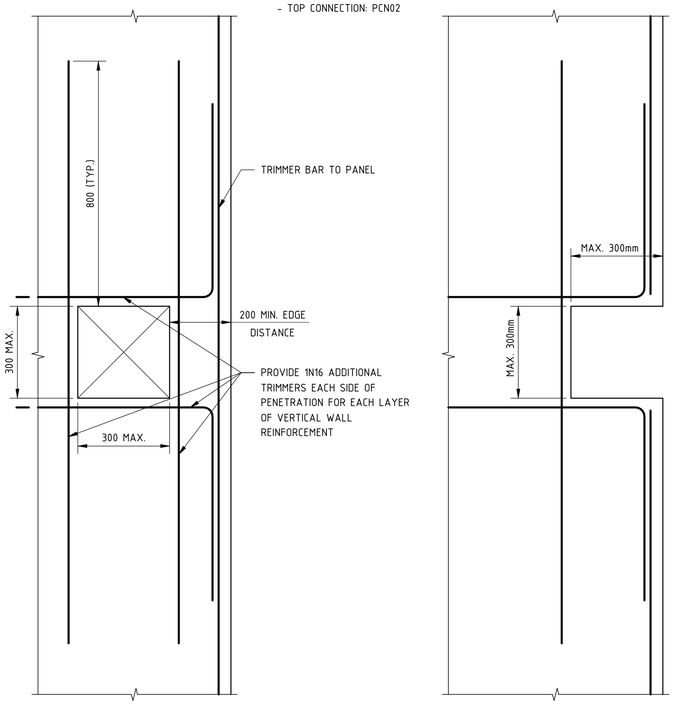

WHERE PENETRATION IS FURTHER THAN 200mm FROM EDGE

WHERE PENETRATION IS WITHIN 200mm OF EDGE

TYPICAL PRECAST WALL PENETRATION DETAIL NEAR EDGE OF PANEL

NOTES:

1. LOCATION OF PENETRATIONS TO ENGINEERS APPROVAL.
2. USE ABOVE DETAIL UNLESS OTHERWISE NOTED ON WALL ELEVATIONS.

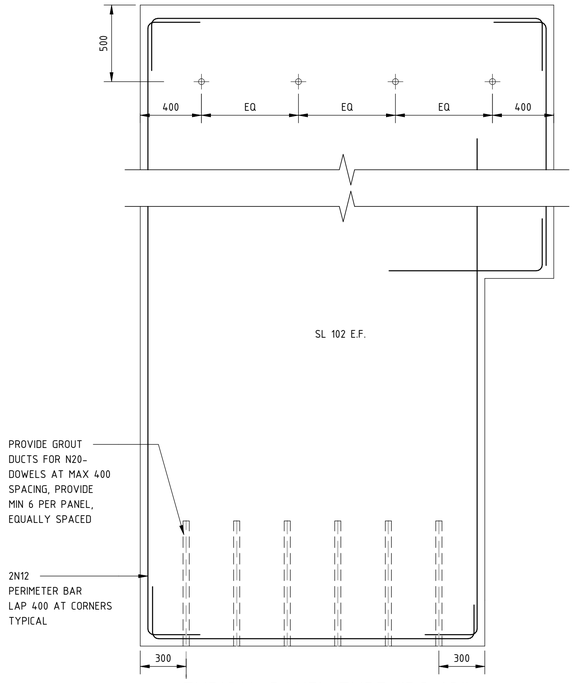

TYPICAL PANEL TYPE "PC-03"

PRECAST PANEL: 200 STRUCTURAL THICKNESS

- BASE CONNECTION: PCN03
- TOP CONNECTION: PCN04

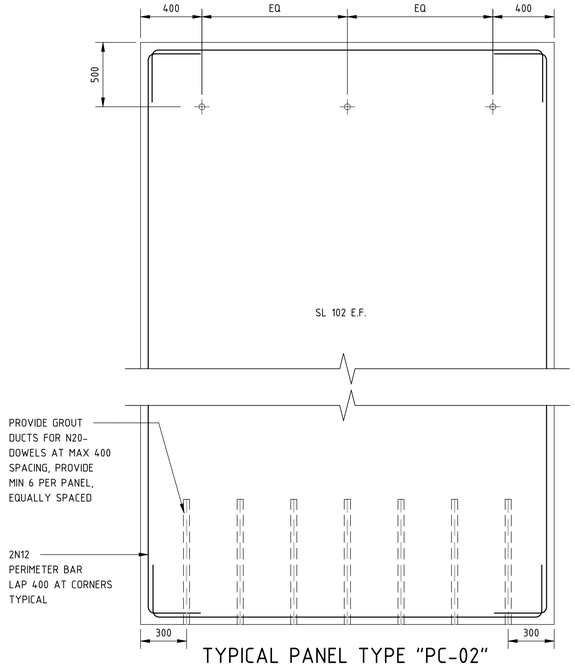

TYPICAL PANEL TYPE "PC-02"

PRECAST PANEL: 200 STRUCTURAL THICKNESS

- BASE CONNECTION: PCN03
- TOP CONNECTION: PCN04

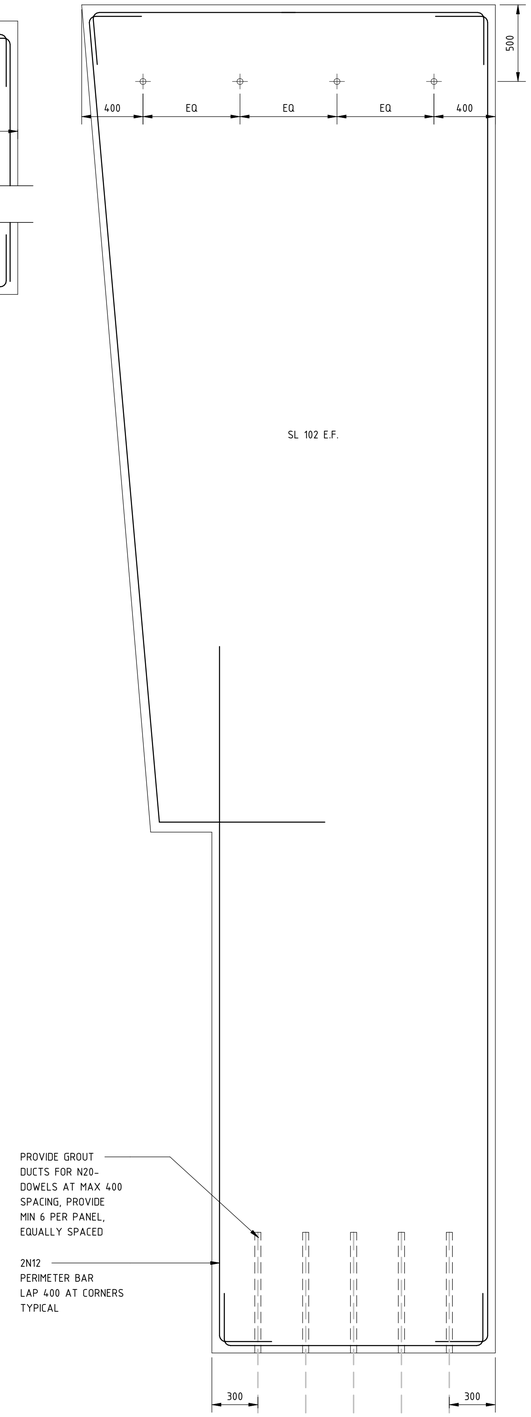

TYPICAL PANEL TYPE "PC-04"

PRECAST PANEL: 200 STRUCTURAL THICKNESS

- BASE CONNECTION: PCN03
- TOP CONNECTION: PCN04

NOTES:

1. REFER ARCHITECTURAL DRAWINGS FOR DETAILS ON THE APPLIED FIRE PROTECTION TO STRUCTURAL STEELWORK
2. REFER DRAWING 12-A-152-ST0010 FOR STANDARD CONNECTION DETAILS
   ALL DIMENSIONS TO PRECAST PANELS ARE NOMINAL ONLY AND SHOULD BE REFERENCED WITH THE ARCHITECTS DRAWINGS. THESE SHALL BE CONFIRMED WITH THE PRECAST CONTRACTOR
3. REFER TO THE ARCHITECTS DRAWINGS FOR REBATES, CHAMFERS, DRIPS, SEALS, BAFFLES, ETC. AND EXTENT OF FINISHES
4. REFER TO THE ARCHITECTS DRAWINGS FOR ALL JOINTING DETAILS
   IT IS THE CONTRACTORS RESPONSIBILITY TO CO-ORDINATE ALL PENETRATIONS FOR SERVICES ETC. ALL PENETRATIONS SHALL BE SHOWN ON SHOP DRAWINGS FOR APPROVAL PRIOR TO FABRICATION OF ANY PANEL
5. REFER TO 12-A-152-ST0004 FOR GENERAL PRECAST NOTES, REFER TO 12-A-152-ST0169 FOR PRECAST PANEL TYPES
6. DOWEL TUBE AND FERRULE LOCATIONS ON PRECAST SHOP DRAWINGS SHALL INCORPORATE THE SURVEYED AS BUILT LOCATIONS OF DOWELS
7. PROVIDE ADDITIONAL FERRULES AND/OR WELD PLATES AS REQUIRED - REFER PLANS AND DETAILS

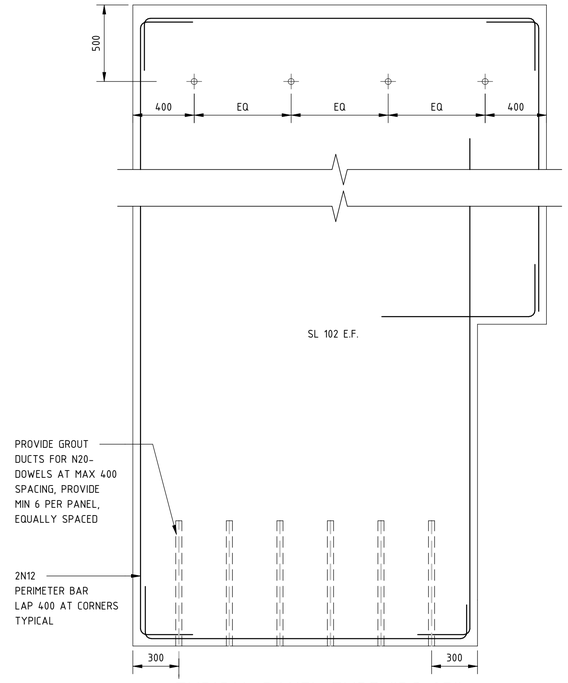

TYPICAL PANEL TYPE "PC-05"

PRECAST PANEL: 200 STRUCTURAL THICKNESS

- BASE CONNECTION: PCN03
- TOP CONNECTION: PCN04

USE OF THESE DRAWINGS

1. THIS DRAWING SHALL BE READ IN CONJUNCTION WITH THE DISCIPLINE CONTRACT SPECIFICATION AND OTHER PROJECT DOCUMENTS.
2. INFORMATION SHOWN ON THIS DRAWING SHALL NOT BE USED FOR CONSTRUCTION PURPOSES. THE DRAWINGS AND SPECIFICATIONS DO NOT PURPORT TO SHOW ALL MINOR ITEMS OF EQUIPMENT AND ACCESSORIES WHICH MAY BE NECESSARY. THESE MINOR ITEMS SHALL BE PROVIDED TO FORM COMPLETE AND FULLY OPERATIONAL SYSTEMS.
3. THE CONTRACTORS SHALL BE FULLY AWARE OF THE OTHER INTERFACING PACKAGES AND SHALL HAVE DEEMED TO HAVE INCLUDED INTER-TRADE INTERFACES. THE INTERFACES IDENTIFIED IN THE DOCUMENTATION ARE TO INDICATE AN INTENT AND ARE NOT INTENDED TO BE EXHAUSTIVE. MAKE ALLOWANCES AS REQUIRED.

ISSUED FOR CONSTRUCTION

REV	DATE	AMENDMENT	DSN	DRN	CHKD	APP
1	27.09.19	ISSUED FOR CONSTRUCTION	J.B.	A.C.D.	M.P.	G.B.
0	30.08.19	ISSUED FOR CONSTRUCTION	J.B.	A.C.D.	M.P.	G.B.

ORIG SIZE A1

0 0.2 0.4 0.6 0.8 1 2m
SCALE 1:20 AT A1

This document must not be copied without PTA's written permission, and the contents thereof must not be imparted to a third party nor be used for any unauthorised purpose.

aurecon
www.aurecongroup.com

505695-0000-DRG-ST-1654

REFERENCES

SCALE : As indicated (@ A1)
DATUM : HORIZONTAL: PCG94 VERTICAL: AHD71
PTA ACCEPTANCE STAMP

DESIGNED J.BRUINS
DRAWN A.DAWSON
CHECKED M.PEARCE
APPROVED FOR ISSUE
G.BENTLEY
DATE

Government of Western Australia Public Transport Authority
DETAILED DESIGN FOR THE BELLEVUE DEPOT

ASSEMBLY FACILITY
STRUCTURAL
PRECAST PANEL ELEVATIONS

PTA Drawing No: 12-A-152-ST0041 REV : 1

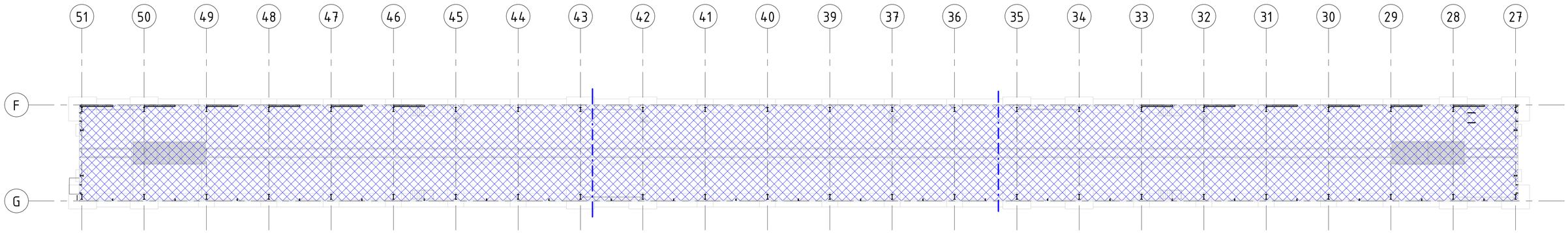

HV TEST FACILITY GROUND LD

1 : 250

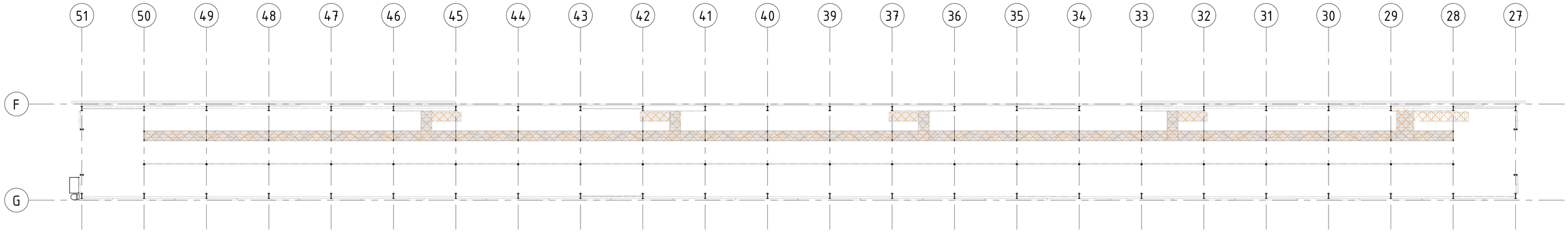

HV MEZZANINE LD

1 : 250

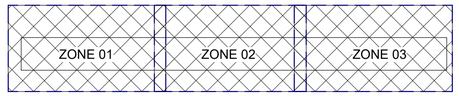

ZONE PLAN

NOTES:

1. DO NO SCALE DRAWINGS. WRITTEN DIMENSIONS GOVERN.
2. ALL DIMENSIONS ARE IN MILLIMETRES UNLESS NOTED OTHERWISE
3. ALL DIMENSIONS SHALL BE VERIFIED ON SITE BEFORE PROCEEDING WITH THE WORK. RELEVANT PARTY SHALL BE NOTIFIED IN WRITING OF ANY DISCREPANCIES.
4. THIS DRAWING MUST BE READ IN CONJUNCTION WITH ALL RELEVANT CONTRACTS, SPECIFICATIONS, REPORTS AND DRAWINGS.

DESIGN LOAD ALLOWANCES - UNFACTORED LIVE LOADS

LEGEND

GENERAL

AREA LOAD - 10kPa
AXLE LOAD - 4250kg

ELEVATED WALKING PLATFORM & STAIRS

AREA LOAD - 2.5kPa
AXLE LOAD - N/A

ROOF

AREA LOAD - 0.25kPa
SDL - 0.25kPa

- AXLE LOAD BASED ON 2000kg CAPACITY PNEUMATIC AND CUSHION FORKLIFT - REFERENCE TYPE CROWN CGC20SC-5
- SDL = 0.5 kPa TYPICAL
- ALLOWANCE FOR RAIL CAR LINE LOADS 22T

USE OF THESE DRAWINGS

1. THIS DRAWING SHALL BE READ IN CONJUNCTION WITH THE DISCIPLINE CONTRACT SPECIFICATION AND OTHER PROJECT DOCUMENTS.
2. DRAWINGS AND DESIGNS UNDERTAKEN BY A SHOP DETAILER SHALL BE PRESENTED TO THE PTA FOR REVIEW AND CONCURRENCE THAT THE DESIGN INTENT HAS BEEN ACHIEVED.
3. THE CONTRACTORS SHALL BE FULLY AWARE OF THE OTHER INTERFACING PACKAGES AND SHALL HAVE DEEMED TO HAVE INCLUDED INTER-TRADE INTERFACES. THE INTERFACES IDENTIFIED IN THE DOCUMENTATION ARE TO INDICATE AN INTENT AND ARE NOT INTENDED TO BE EXHAUSTIVE. MAKE ALLOWANCES AS REQUIRED.

ISSUED FOR CONSTRUCTION

REV	DATE	AMENDMENT	DSN	DRN	CHKD	APP
0	01.10.19	ISSUED FOR CONSTRUCTION	J.S.	A.C.D.	M.P.	G.B.

ORIG SIZE A1

0 3 6 9 12 15 30m
SCALE 1:300 AT A1

This document must not be copied without PTA's written permission, and the contents thereof must not be imparted to a third party nor be used for any unauthorised purpose.

aurecon
www.aurecongroup.com

505695-0000-DRG-ST-1150

REFERENCES

SCALE : As indicated (@ A1)
DATUM :
HORIZONTAL: PCG94
VERTICAL: AHD71

PTA ACCEPTANCE STAMP

DESIGNED J.SPANO
DRAWN A.DAWSON
CHECKED M.PEARCE
APPROVED FOR ISSUE
G.BENTLEY
DATE

Government of Western Australia Public Transport Authority

DETAILED DESIGN FOR THE BELLEVUE DEPOT

HV TESTING FACILITY
STRUCTURAL
LOADING DIAGRAM PLAN

PTA Drawing No: 12-A-152-ST0201 REV : 0

Plot Date: 10/1/2019 9:25:12 AM Office: PERTH Filename: BIM 360://505695 - Bellevue Depot/505695-ST-BELLEVUE DEPOT-02B.rvt

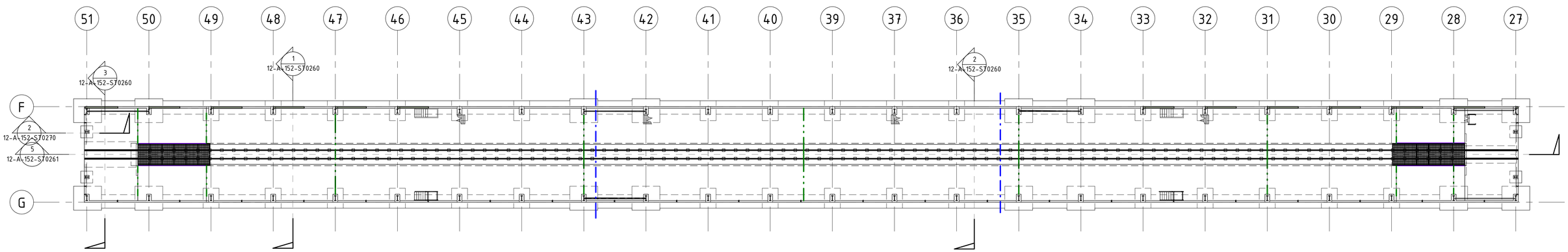

FOOTING AND GROUND SLAB PLAN

1 : 250

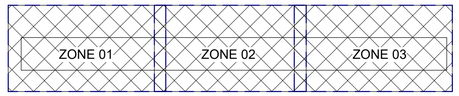

ZONE PLAN

NOTES:

1. DO NO SCALE DRAWINGS. WRITTEN DIMENSIONS GOVERN.
2. ALL DIMENSIONS ARE IN MILLIMETRES UNLESS NOTED OTHERWISE
3. ALL DIMENSIONS SHALL BE VERIFIED ON SITE BEFORE PROCEEDING WITH THE WORK. RELEVANT PARTY SHALL BE NOTIFIED IN WRITING OF ANY DISCREPANCIES.
4. THIS DRAWING MUST BE READ IN CONJUNCTION WITH ALL RELEVANT CONTRACTS, SPECIFICATIONS, REPORTS AND DRAWINGS.

USE OF THESE DRAWINGS

1. THIS DRAWING SHALL BE READ IN CONJUNCTION WITH THE DISCIPLINE CONTRACT SPECIFICATION AND OTHER PROJECT DOCUMENTS.
2. DRAWINGS AND DESIGNS UNDERTAKEN BY A SHOP DETAILER SHALL BE PRESENTED TO THE PTA FOR REVIEW AND CONCURRENCE THAT THE DESIGN INTENT HAS BEEN ACHIEVED.
3. THE CONTRACTORS SHALL BE FULLY AWARE OF THE OTHER INTERFACING PACKAGES AND SHALL HAVE DEEMED TO HAVE INCLUDED INTER-TRADE INTERFACES. THE INTERFACES IDENTIFIED IN THE DOCUMENTATION ARE TO INDICATE AN INTENT AND ARE NOT INTENDED TO BE EXHAUSTIVE. MAKE ALLOWANCES AS REQUIRED.

ISSUED FOR CONSTRUCTION

REV	DATE	AMENDMENT	DSN	DRN	CHKD	APP
0	01.10.19	ISSUED FOR CONSTRUCTION	J.S.	A.C.D.	M.P.	G.B.

ORIG SIZE A1

0 2.5 5 7.5 10 12.5 25m

SCALE 1:250 AT A1

This document must not be copied without PTA's written permission, and the contents thereof must not be imparted to a third party nor be used for any unauthorised purpose.

aurecon

www.aurecongroup.com

505695-0000-DRG-ST-1250

REFERENCES

SCALE : As indicated (@ A1)

DATUM : HORIZONTAL: PCG94 VERTICAL: AHD71

PTA ACCEPTANCE STAMP

DESIGNED J.SPANO

DRAWN A.DAWSON

CHECKED M.PEARCE

APPROVED FOR ISSUE

G.BENTLEY

DATE

Government of Western Australia Public Transport Authority

DETAILED DESIGN FOR THE BELLEVUE DEPOT

HV TESTING FACILITY

STRUCTURAL

FOOTING AND GROUND FLOOR PLAN

PTA Drawing No: 12-A-152-ST0210

REV : 0

Plot Date: 10/1/2019 9:25:14 AM Office: Filename: BIM 360://505695 - Bellevue Depot/505695-ST-BELLEVUE DEPOT-02B.rvt

NOTES :

1. FOR GENERAL NOTES AND DETAILS REFER TO 12-A-152-ST0003 TO 12-A-152-ST0031
2. FOR SLAB DETAILS , REFER TO 12-A-152-0010
3. FOR FOUNDATION DETAILS REFER TO 12-A-152-0271
4. FOR CONCRETE PEDESTAL DETAILS, REFER TO 12-A-152-0272
5. SLAB IN HV BUILDING TO BE 150MM THK.WITH STEEL FIBRE REINFORCEMENT + SUPPLEMENTARY MESH UNO.
   FIBRE SUPPLIER : BOSFA PTY. LTD
   FIBRE NAME : DRAMIX 4D
   DOSAGE : 65/60 AT 30KG/M3
   TYPICAL SUPPLEMENTARY MESH : SL81
   OTHER SUPPLEMENTARY REINFORCEMENT : REFER TO CONCRETE DRAWINGS
6. ISOLATION JOINTS TO ALL SLAB PERIMETERS UNO
7. FOUNDING MATERIAL BELOW GROUND TO HAVE MINIMUM 250KPA BEARING CAPACITY
8. PENETRATIONS FOR BELOW GROUND CONDUITS MUST BE COORDINATED WITH SERVICES DRAWINGS
9. REFER TO EARTHING AND BONDING REPORT FOR EARTHING AND BONDING REQUIREMENTS
10. REFER TO TRACK DRAWINGS FOR RAIL TYPE, GAUGE AND FIXING DETAILS
11 . REFER 12-A-152-ST0070 FOR TYPICAL SLAB TRIMMING DETAILS

ZONE 01

ZONE PLAN

NOTES:

1. DO NO SCALE DRAWINGS. WRITTEN DIMENSIONS GOVERN.
2. ALL DIMENSIONS ARE IN MILLIMETRES UNLESS NOTED OTHERWISE
3. ALL DIMENSIONS SHALL BE VERIFIED ON SITE BEFORE PROCEEDING WITH THE WORK. RELEVANT PARTY SHALL BE NOTIFIED IN WRITING OF ANY DISCREPANCIES.
4. THIS DRAWING MUST BE READ IN CONJUNCTION WITH ALL RELEVANT CONTRACTS, SPECIFICATIONS, REPORTS AND DRAWINGS.

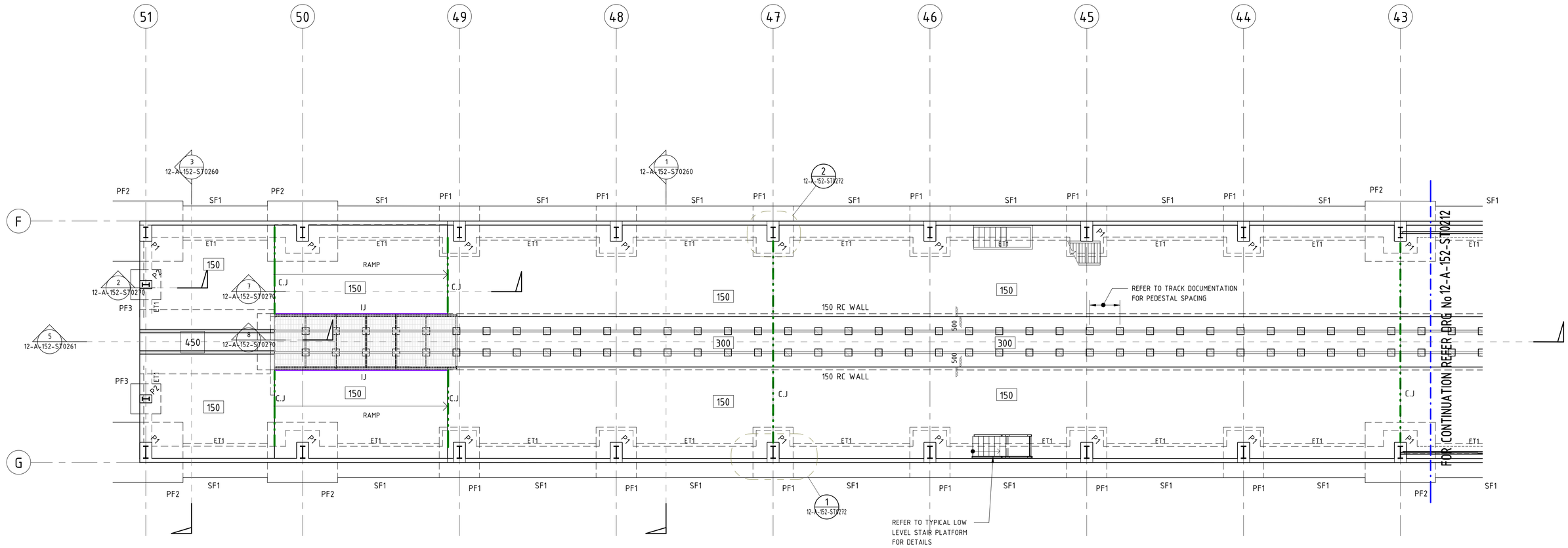

SLAB ON GRADE LEGEND

300 – DENOTES SLAB THICKNESS

STEP – DENOTES SLAB STEP; REFER ARCHITECTURAL DRAWINGS FOR DETAILS

– DENOTES ISOLATION JOINT (IJ)

– DENOTES CONSTRUCTION JOINT (C.J.)

P3 – DENOTES PEDESTAL, REFER ST-00176

FOOTING SCHEDULE

MARK	SIZE (W x L x D)	REMARKS
PF1	2500 x 2000 x 600	
PF2	3000 x 3500 x 600	
PF3	1500 x 1500 x 500	
SF1	1700 x 300	

USE OF THESE DRAWINGS

1. THIS DRAWING SHALL BE READ IN CONJUNCTION WITH THE DISCIPLINE CONTRACT SPECIFICATION AND OTHER PROJECT DOCUMENTS.
2. DRAWINGS AND DESIGNS UNDERTAKEN BY A SHOP DETAILER SHALL BE PRESENTED TO THE PTA FOR REVIEW AND CONCURRENCE THAT THE DESIGN INTENT HAS BEEN ACHIEVED.
3. THE CONTRACTORS SHALL BE FULLY AWARE OF THE OTHER INTERFACING PACKAGES AND SHALL HAVE DEEMED TO HAVE INCLUDED INTER-TRADE INTERFACES. THE INTERFACES IDENTIFIED IN THE DOCUMENTATION ARE TO INDICATE AN INTENT AND ARE NOT INTENDED TO BE EXHAUSTIVE. MAKE ALLOWANCES AS REQUIRED.

ISSUED FOR CONSTRUCTION

REV	DATE	AMENDMENT	DSN	DRN	CHKD	APP
0	01.10.19	ISSUED FOR CONSTRUCTION	J.S.	A.C.D.	M.P.	G.B.

ORIG SIZE A1

0 1 2 3 4 5 10m
SCALE 1:100 AT A1

This document must not be copied without PTA's written permission, and the contents thereof must not be imparted to a third party nor be used for any unauthorised purpose.

aurecon
www.aurecongroup.com

505695-0000-DRG-ST-1251

REFERENCES

SCALE : As indicated (@ A1)
DATUM :
HORIZONTAL: PCG94
VERTICAL: AHD71

PTA ACCEPTANCE STAMP

DESIGNED J.SPANO
DRAWN A.DAWSON
CHECKED M.PEARCE
APPROVED FOR ISSUE
G.BENTLEY
DATE

Government of Western Australia Public Transport Authority

DETAILED DESIGN FOR THE BELLEVUE DEPOT

HV TESTING FACILITY
STRUCTURAL
FOOTING AND GROUND FLOOR PLAN - ZONE 01

PTA Drawing No: 12-A-152-ST0211 REV : 0

Plot Date: 10/1/2019 9:25:17 AM Office: PERTH Filename: BIM 360://505695 - Bellevue Depot/505695-ST-BELLEVUE DEPOT-02B.rvt

NOTES :

1. FOR GENERAL NOTES AND DETAILS REFER TO 12-A-152-ST0003 TO 12-A-152-ST0031
2. FOR SLAB DETAILS , REFER TO 12-A-152-0010
3. FOR FOUNDATION DETAILS REFER TO 12-A-152-0271
4. FOR CONCRETE PEDESTAL DETAILS, REFER TO 12-A-152-0272
5. SLAB IN HV BUILDING TO BE 150MM THK.WITH STEEL FIBRE REINFORCEMENT + SUPPLEMENTARY MESH UNO.
   FIBRE SUPPLIER : BOSFA PTY. LTD
   FIBRE NAME : DRAMIX 4D
   DOSAGE : 65/60 AT 30KG/M3
   TYPICAL SUPPLEMENTARY MESH : SL81
   OTHER SUPPLEMENTARY REINFORCEMENT : REFER TO CONCRETE DRAWINGS
6. ISOLATION JOINTS TO ALL SLAB PERIMETERS UNO
7. FOUNDING MATERIAL BELOW GROUND TO HAVE MINIMUM 250KPA BEARING CAPACITY
8. PENETRATIONS FOR BELOW GROUND CONDUITS MUST BE COORDINATED WITH SERVICES DRAWINGS
9. REFER TO EARTHING AND BONDING REPORT FOR EARTHING AND BONDING REQUIREMENTS
10. REFER TO TRACK DRAWINGS FOR RAIL TYPE, GAUGE AND FIXING DETAILS
11. REFER 12-A-152-ST0070 FOR TYPICAL SLAB TRIMMING DETAILS

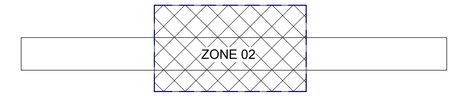

ZONE PLAN

NOTES:

1. DO NO SCALE DRAWINGS. WRITTEN DIMENSIONS GOVERN.
2. ALL DIMENSIONS ARE IN MILLIMETRES UNLESS NOTED OTHERWISE
3. ALL DIMENSIONS SHALL BE VERIFIED ON SITE BEFORE PROCEEDING WITH THE WORK. RELEVANT PARTY SHALL BE NOTIFIED IN WRITING OF ANY DISCREPANCIES.
4. THIS DRAWING MUST BE READ IN CONJUNCTION WITH ALL RELEVANT CONTRACTS, SPECIFICATIONS, REPORTS AND DRAWINGS.

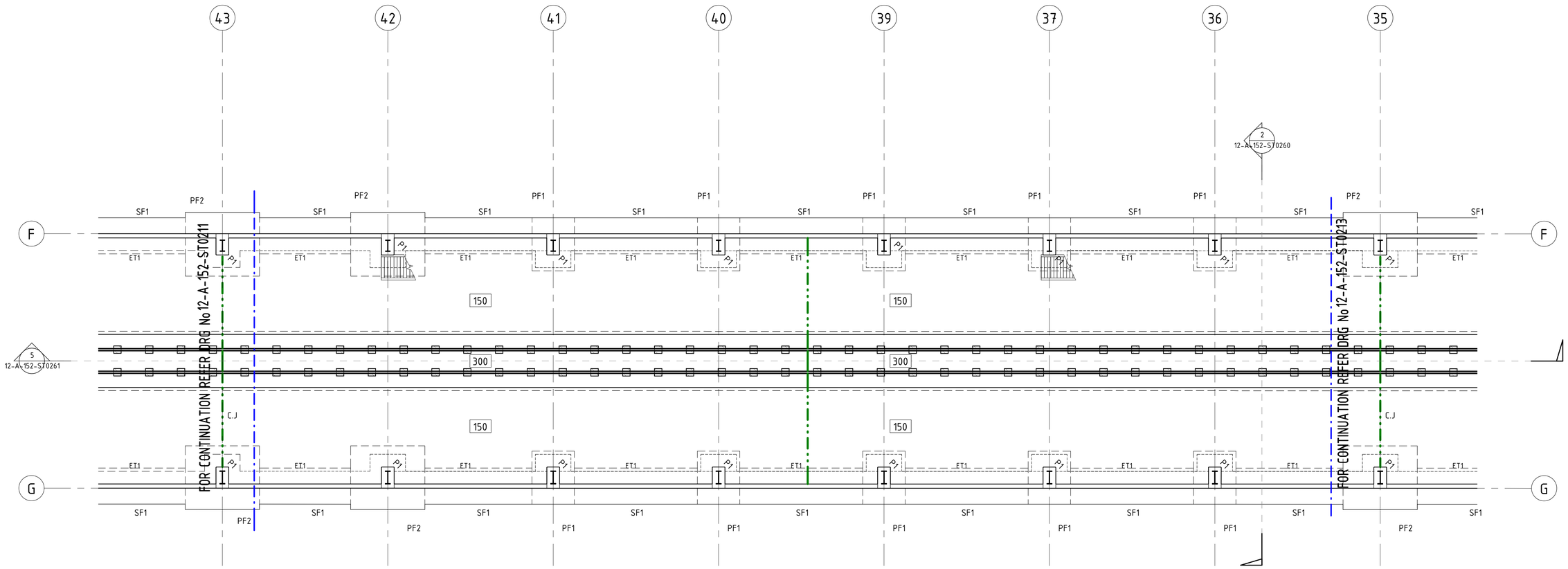

FOOTING AND GROUND SLAB PLAN (ZONE 2)

1 : 100

FOOTING SCHEDULE

MARK	SIZE (W x L x D)	REMARKS
PF1	2500 x 2000 x 600	
PF2	3000 x 3500 x 600	
PF3	1500 x 1500 x 500	
SF1	1700 x 300	

SLAB ON GRADE LEGEND

300 - DENOTES SLAB THICKNESS

STEP - DENOTES SLAB STEP; REFER ARCHITECTURAL DRAWINGS FOR DETAILS

- DENOTES ISOLATION JOINT (IJ)

- DENOTES CONSTRUCTION JOINT (C.J.)

- DENOTES PEDESTAL, REFER ST-00176

USE OF THESE DRAWINGS

1. THIS DRAWING SHALL BE READ IN CONJUNCTION WITH THE DISCIPLINE CONTRACT SPECIFICATION AND OTHER PROJECT DOCUMENTS.
2. DRAWINGS AND DESIGNS UNDERTAKEN BY A SHOP DETAILER SHALL BE PRESENTED TO THE PTA FOR REVIEW AND CONCURRENCE THAT THE DESIGN INTENT HAS BEEN ACHIEVED.
3. THE CONTRACTORS SHALL BE FULLY AWARE OF THE OTHER INTERFACING PACKAGES AND SHALL HAVE DEEMED TO HAVE INCLUDED INTER-TRADE INTERFACES. THE INTERFACES IDENTIFIED IN THE DOCUMENTATION ARE TO INDICATE AN INTENT AND ARE NOT INTENDED TO BE EXHAUSTIVE. MAKE ALLOWANCES AS REQUIRED.

ISSUED FOR CONSTRUCTION

REV	DATE	AMENDMENT	DSN	DRN	CHKD	APP
0	01.10.19	ISSUED FOR CONSTRUCTION	J.S.	A.C.D.	M.P.	G.B.

ORIG SIZE A1

0 1 2 3 4 5 10m
SCALE 1:100 AT A1

This document must not be copied without PTA's written permission, and the contents thereof must not be imparted to a third party nor be used for any unauthorised purpose.

aurecon
www.aurecongroup.com

505695-0000-DRG-ST-1252

REFERENCES

SCALE : As indicated (@ A1)
DATUM : HORIZONTAL: PCG94 VERTICAL: AHD71
PTA ACCEPTANCE STAMP

DESIGNED J.SPANO
DRAWN A.DAWSON
CHECKED M.PEARCE
APPROVED FOR ISSUE
G.BENTLEY
DATE

Government of Western Australia Public Transport Authority
DETAILED DESIGN FOR THE BELLEVUE DEPOT

HV TESTING FACILITY
STRUCTURAL
FOOTING AND GROUND FLOOR PLAN - ZONE 02

PTA Drawing No: 12-A-152-ST0212 REV : 0

Plot Date: 10/1/2019 9:25:20 AM Office: PERTH Filename: BIM 360://505695 - Bellevue Depot/505695-ST-BELLEVUE DEPOT-02B.rvt

NOTES :

1. FOR GENERAL NOTES AND DETAILS REFER TO 12-A-152-ST0003 TO 12-A-152-ST0031
2. FOR SLAB DETAILS , REFER TO 12-A-152-0010
3. FOR FOUNDATION DETAILS REFER TO 12-A-152-0271
4. FOR CONCRETE PEDESTAL DETAILS, REFER TO 12-A-152-0272
5. SLAB IN HV BUILDING TO BE 150MM THK.WITH STEEL FIBRE REINFORCEMENT + SUPPLEMENTARY MESH UNO.
   FIBRE SUPPLIER : BOSFA PTY. LTD
   FIBRE NAME : DRAMIX 4D
   DOSAGE : 65/60 AT 30KG/M3
   TYPICAL SUPPLEMENTARY MESH : SL81
   OTHER SUPPLEMENTARY REINFORCEMENT : REFER TO CONCRETE DRAWINGS
6. ISOLATION JOINTS TO ALL SLAB PERIMETERS UNO
7. FOUNDING MATERIAL BELOW GROUND TO HAVE MINIMUM 250KPA BEARING CAPACITY
8. PENETRATIONS FOR BELOW GROUND CONDUITS MUST BE COORDINATED WITH SERVICES DRAWINGS
9. REFER TO EARTHING AND BONDING REPORT FOR EARTHING AND BONDING REQUIREMENTS
10. REFER TO TRACK DRAWINGS FOR RAIL TYPE, GAUGE AND FIXING DETAILS
11 . REFER 12-A-152-ST0070 FOR TYPICAL SLAB TRIMMING DETAILS

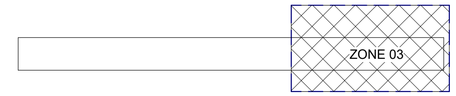

ZONE PLAN

NOTES:

1. DO NO SCALE DRAWINGS. WRITTEN DIMENSIONS GOVERN.
2. ALL DIMENSIONS ARE IN MILLIMETRES UNLESS NOTED OTHERWISE
3. ALL DIMENSIONS SHALL BE VERIFIED ON SITE BEFORE PROCEEDING WITH THE WORK. RELEVANT PARTY SHALL BE NOTIFIED IN WRITING OF ANY DISCREPANCIES.
4. THIS DRAWING MUST BE READ IN CONJUNCTION WITH ALL RELEVANT CONTRACTS, SPECIFICATIONS, REPORTS AND DRAWINGS.

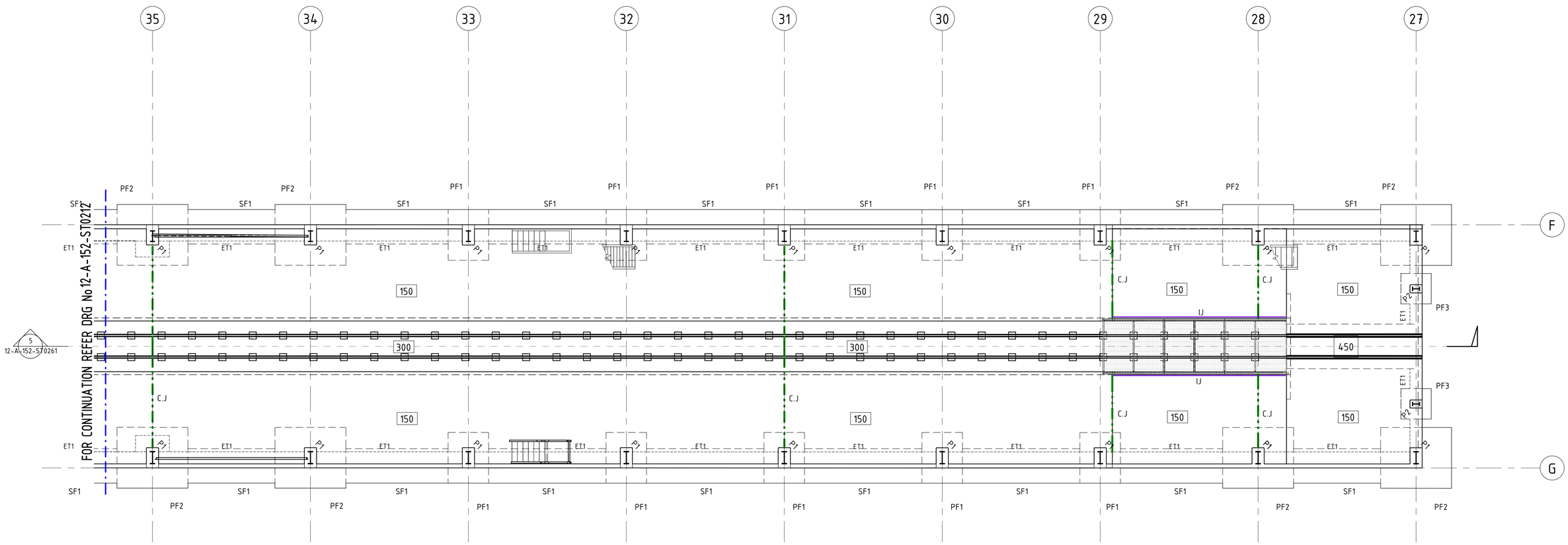

FOOTING AND GROUND SLAB PLAN (ZONE 3)

1 : 100

SLAB ON GRADE LEGEND

FOOTING SCHEDULE		
MARK	SIZE (W x L x D)	REMARKS
PF1	2500 x 2000 x 600	
PF2	3000 x 3500 x 600	
PF3	1500 x 1500 x 500	
SF1	1700 x 300	

300 - DENOTES SLAB THICKNESS

STEP - DENOTES SLAB STEP; REFER ARCHITECTURAL DRAWINGS FOR DETAILS

- DENOTES ISOLATION JOINT (IJ)

- DENOTES CONSTRUCTION JOINT (C.J.)

P3 - DENOTES PEDESTAL, REFER ST-00176

USE OF THESE DRAWINGS

1. THIS DRAWING SHALL BE READ IN CONJUNCTION WITH THE DISCIPLINE CONTRACT SPECIFICATION AND OTHER PROJECT DOCUMENTS.
2. DRAWINGS AND DESIGNS UNDERTAKEN BY A SHOP DETAILER SHALL BE PRESENTED TO THE PTA FOR REVIEW AND CONCURRENCE THAT THE DESIGN INTENT HAS BEEN ACHIEVED.
3. THE CONTRACTORS SHALL BE FULLY AWARE OF THE OTHER INTERFACING PACKAGES AND SHALL HAVE DEEMED TO HAVE INCLUDED INTER-TRADE INTERFACES. THE INTERFACES IDENTIFIED IN THE DOCUMENTATION ARE TO INDICATE AN INTENT AND ARE NOT INTENDED TO BE EXHAUSTIVE. MAKE ALLOWANCES AS REQUIRED.

ISSUED FOR CONSTRUCTION

REV	DATE	AMENDMENT	DSN	DRN	CHKD	APP
0	01.10.19	ISSUED FOR CONSTRUCTION	J.S.	A.C.D.	M.P.	G.B.

ORIG SIZE A1

0 1 2 3 4 5 10m
SCALE 1:100 AT A1

This document must not be copied without PTA's written permission, and the contents thereof must not be imparted to a third party nor be used for any unauthorised purpose.

aurecon
www.aurecongroup.com

505695-0000-DRG-ST-1253

REFERENCES

SCALE : As indicated (@ A1)
DATUM :
HORIZONTAL: PCG94
VERTICAL: AHD71
PTA ACCEPTANCE STAMP

DESIGNED J.SPANO
DRAWN A.DAWSON
CHECKED M.PEARCE
APPROVED FOR ISSUE
G.BENTLEY
DATE

Government of Western Australia Public Transport Authority

DETAILED DESIGN FOR THE BELLEVUE DEPOT

HV TESTING FACILITY
STRUCTURAL
FOOTING AND GROUND FLOOR PLAN - ZONE 03

PTA Drawing No: 12-A-152-ST0213 REV : 0

Plot Date: 10/1/2019 9:25:23 AM Office: PERTH Filename: BIM 360://505695 - Bellevue Depot/505695-ST-BELLEVUE DEPOT-02B.rvt

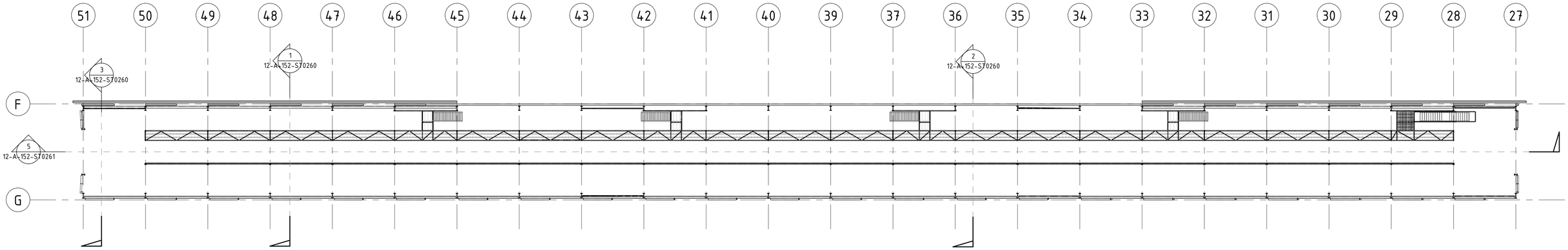

OVERALL MEZZANINE STEELWORK PLAN

1 : 250

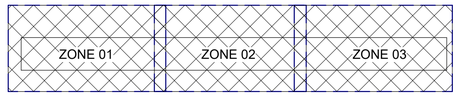

ZONE PLAN

NOTES:

1. DO NO SCALE DRAWINGS. WRITTEN DIMENSIONS GOVERN.
2. ALL DIMENSIONS ARE IN MILLIMETRES UNLESS NOTED OTHERWISE
3. ALL DIMENSIONS SHALL BE VERIFIED ON SITE BEFORE PROCEEDING WITH THE WORK. RELEVANT PARTY SHALL BE NOTIFIED IN WRITING OF ANY DISCREPANCIES.
4. THIS DRAWING MUST BE READ IN CONJUNCTION WITH ALL RELEVANT CONTRACTS, SPECIFICATIONS, REPORTS AND DRAWINGS.

USE OF THESE DRAWINGS

1. THIS DRAWING SHALL BE READ IN CONJUNCTION WITH THE DISCIPLINE CONTRACT SPECIFICATION AND OTHER PROJECT DOCUMENTS.
2. DRAWINGS AND DESIGNS UNDERTAKEN BY A SHOP DETAILER SHALL BE PRESENTED TO THE PTA FOR REVIEW AND CONCURRENCE THAT THE DESIGN INTENT HAS BEEN ACHIEVED.
3. THE CONTRACTORS SHALL BE FULLY AWARE OF THE OTHER INTERFACING PACKAGES AND SHALL HAVE DEEMED TO HAVE INCLUDED INTER-TRADE INTERFACES. THE INTERFACES IDENTIFIED IN THE DOCUMENTATION ARE TO INDICATE AN INTENT AND ARE NOT INTENDED TO BE EXHAUSTIVE. MAKE ALLOWANCES AS REQUIRED.

ISSUED FOR CONSTRUCTION

REV	DATE	AMENDMENT	DSN	DRN	CHKD	APP
0	01.10.19	ISSUED FOR CONSTRUCTION	J.S.	A.C.D.	M.P.	G.B.

ORIG SIZE A1

0 2.5 5 7.5 10 12.5 25m

SCALE 1:250 AT A1

This document must not be copied without PTA's written permission, and the contents thereof must not be imparted to a third party nor be used for any unauthorised purpose.

aurecon

www.aurecongroup.com

505695-0000-DRG-ST-1450

REFERENCES

SCALE : As indicated (@ A1)

DATUM : HORIZONTAL: PCG94 VERTICAL: AHD71

PTA ACCEPTANCE STAMP

DESIGNED J.SPANO

DRAWN A.DAWSON

CHECKED M.PEARCE

APPROVED FOR ISSUE G.BENTLEY

DATE

Government of Western Australia Public Transport Authority

DETAILED DESIGN FOR THE BELLEVUE DEPOT

HV TESTING FACILITY

STRUCTURAL

ELEVATED PLATFORM PLAN

PTA Drawing No: 12-A-152-ST0220 REV : 0

Plot Date: 10/1/2019 9:25:25 AM Office: Filename: BIM 360://505695 - Bellevue Depot/505695-ST-BELLEVUE DEPOT-02B.rvt

NOTES:

1. REFER TO ARCHITECTS DRAWINGS FOR DIMENSIONS AND LEVELS
2. REFER TO THE STRUCTURAL SPECIFICATION FOR H.D. GALVANISING REQUIREMENTS
3. REFER TO SERVICES SUBCONTRACTOR DETAILS FOR SECONDARY STEELWORK TO SUPPORT SERVICES EQUIPMENT AND FOR ISOLATION DETAILS
4. PROVIDE EDGE PROTECTION TO ARCHITECTS DETAILS
5. DESIGN OF FLOOR GRATING TO BE UNDERTAKEN BY D&C CONTRACTOR
6. REFER TO ARCHITECTURAL DRAWINGS FOR TYP. SYSTEM WIDE PROPRIETARY HANDRAIL DETAILS

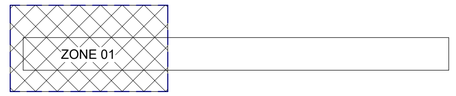

ZONE PLAN

NOTES:

1. DO NO SCALE DRAWINGS. WRITTEN DIMENSIONS GOVERN.
2. ALL DIMENSIONS ARE IN MILLIMETRES UNLESS NOTED OTHERWISE
3. ALL DIMENSIONS SHALL BE VERIFIED ON SITE BEFORE PROCEEDING WITH THE WORK. RELEVANT PARTY SHALL BE NOTIFIED IN WRITING OF ANY DISCREPANCIES.
4. THIS DRAWING MUST BE READ IN CONJUNCTION WITH ALL RELEVANT CONTRACTS, SPECIFICATIONS, REPORTS AND DRAWINGS.

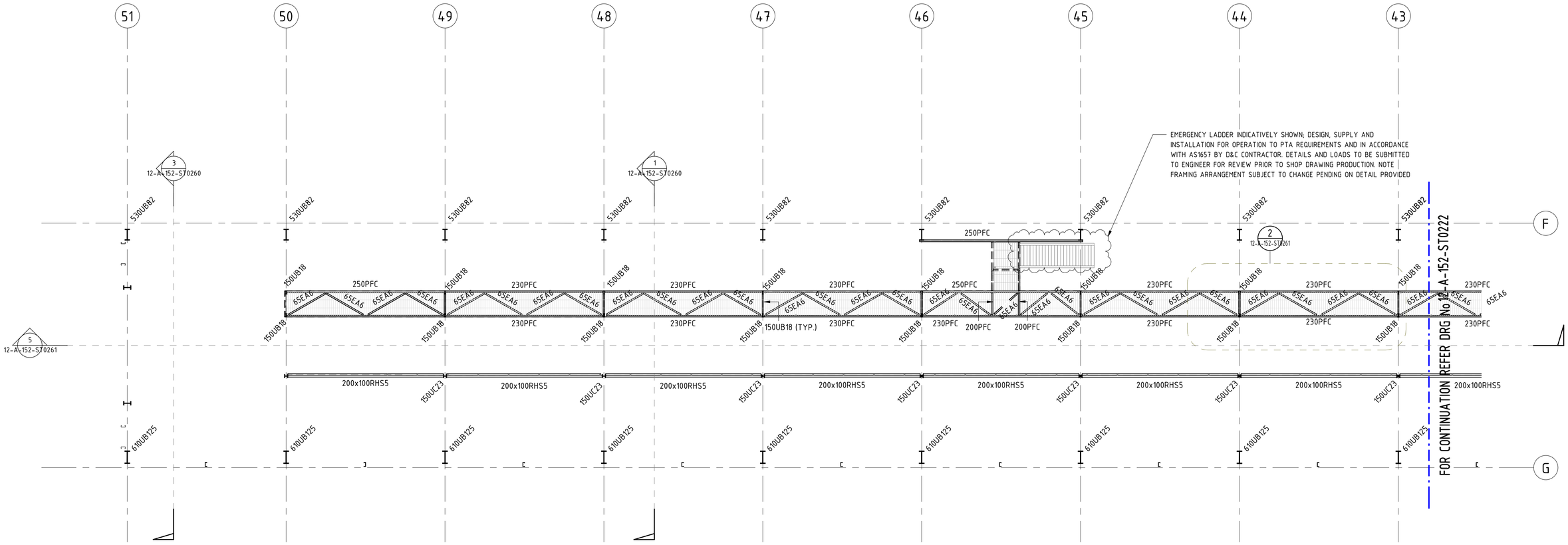

MEZZANINE STEELWORK PLAN (ZONE 1)

1 : 100

USE OF THESE DRAWINGS

1. THIS DRAWING SHALL BE READ IN CONJUNCTION WITH THE DISCIPLINE CONTRACT SPECIFICATION AND OTHER PROJECT DOCUMENTS.
2. DRAWINGS AND DESIGNS UNDERTAKEN BY A SHOP DETAILER SHALL BE PRESENTED TO THE PTA FOR REVIEW AND CONCURRENCE THAT THE DESIGN INTENT HAS BEEN ACHIEVED.
3. THE CONTRACTORS SHALL BE FULLY AWARE OF THE OTHER INTERFACING PACKAGES AND SHALL HAVE DEEMED TO HAVE INCLUDED INTER-TRADE INTERFACES. THE INTERFACES IDENTIFIED IN THE DOCUMENTATION ARE TO INDICATE AN INTENT AND ARE NOT INTENDED TO BE EXHAUSTIVE. MAKE ALLOWANCES AS REQUIRED.

ISSUED FOR CONSTRUCTION

REV	DATE	AMENDMENT	DSN	DRN	CHKD	APP
0	01.10.19	ISSUED FOR CONSTRUCTION	J.S.	A.C.D.	M.P.	G.B.

ORIG SIZE A1

0 1 2 3 4 5 10m

SCALE 1:100 AT A1

This document must not be copied without PTA's written permission, and the contents thereof must not be imparted to a third party nor be used for any unauthorised purpose.

aurecon

www.aurecongroup.com

505695-0000-DRG-ST-1451

REFERENCES

SCALE : As indicated (@ A1)

DATUM : HORIZONTAL: PCG94 VERTICAL: AHD71

PTA ACCEPTANCE STAMP

DESIGNED	J.SPANO
DRAWN	A.DAWSON
CHECKED	M.PEARCE
APPROVED FOR ISSUE	G.BENTLEY
DATE	

Government of Western Australia Public Transport Authority

DETAILED DESIGN FOR THE BELLEVUE DEPOT

HV TESTING FACILITY

STRUCTURAL

ELEVATED PLATFORM PLAN - ZONE 01

PTA Drawing No: 12-A-152-ST0221 REV : 0

Plot Date: 10/1/2019 9:25:28 AM Office: PERTH Filename: BIM 360://505695 - Bellevue Depot/505695-ST-BELLEVUE DEPOT-02B.rvt

NOTES:

1. REFER TO ARCHITECTS DRAWINGS FOR DIMENSIONS AND LEVELS
2. REFER TO THE STRUCTURAL SPECIFICATION FOR H.D. GALVANISING REQUIREMENTS
3. REFER TO SERVICES SUBCONTRACTOR DETAILS FOR SECONDARY STEELWORK TO SUPPORT SERVICES EQUIPMENT AND FOR ISOLATION DETAILS
4. PROVIDE EDGE PROTECTION TO ARCHITECTS DETAILS
5. DESIGN OF FLOOR GRATING TO BE UNDERTAKEN BY D&C CONTRACTOR
6. REFER TO ARCHITECTURAL DRAWINGS FOR TYP. SYSTEM WIDE PROPRIETARY HANDRAIL DETAILS

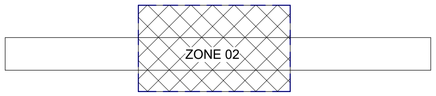

ZONE PLAN

NOTES:

1. DO NO SCALE DRAWINGS. WRITTEN DIMENSIONS GOVERN.
2. ALL DIMENSIONS ARE IN MILLIMETRES UNLESS NOTED OTHERWISE
3. ALL DIMENSIONS SHALL BE VERIFIED ON SITE BEFORE PROCEEDING WITH THE WORK. RELEVANT PARTY SHALL BE NOTIFIED IN WRITING OF ANY DISCREPANCIES.
4. THIS DRAWING MUST BE READ IN CONJUNCTION WITH ALL RELEVANT CONTRACTS, SPECIFICATIONS, REPORTS AND DRAWINGS.

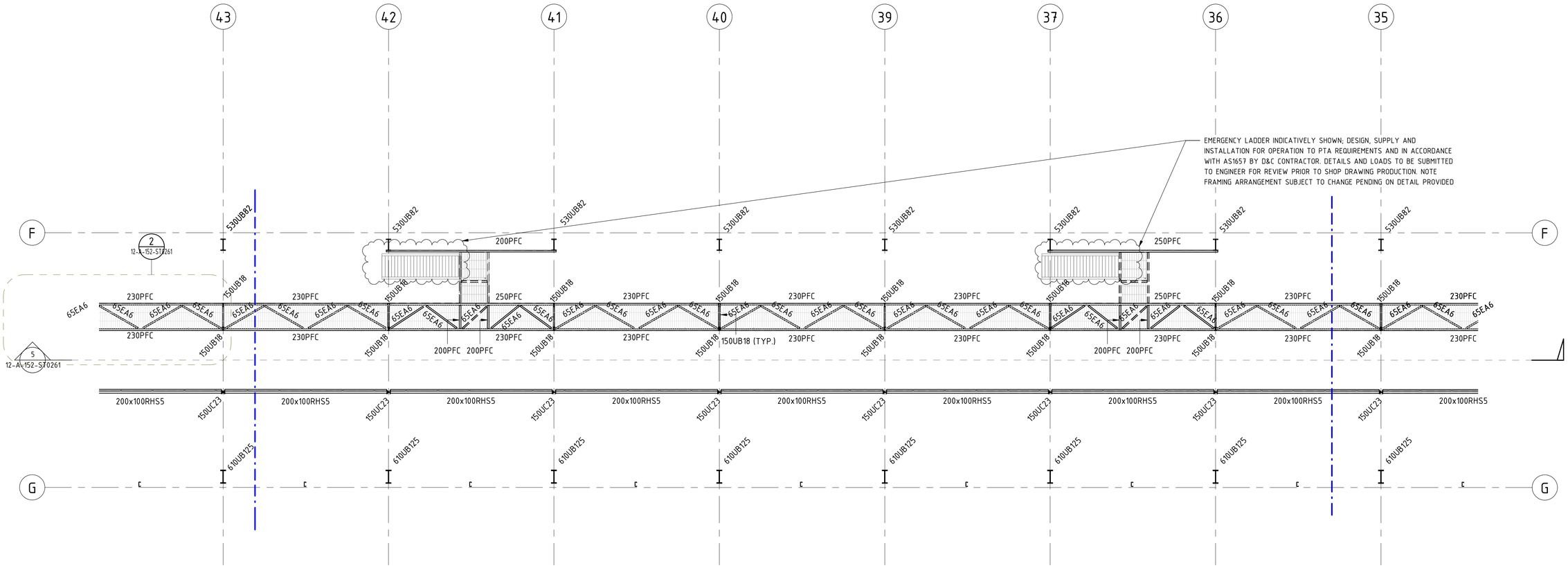

MEZZANINE STEELWORK PLAN (ZONE 2)

1 : 100

USE OF THESE DRAWINGS

1. THIS DRAWING SHALL BE READ IN CONJUNCTION WITH THE DISCIPLINE CONTRACT SPECIFICATION AND OTHER PROJECT DOCUMENTS.
2. DRAWINGS AND DESIGNS UNDERTAKEN BY A SHOP DETAILER SHALL BE PRESENTED TO THE PTA FOR REVIEW AND CONCURRENCE THAT THE DESIGN INTENT HAS BEEN ACHIEVED.
3. THE CONTRACTORS SHALL BE FULLY AWARE OF THE OTHER INTERFACING PACKAGES AND SHALL HAVE DEEMED TO HAVE INCLUDED INTER-TRADE INTERFACES. THE INTERFACES IDENTIFIED IN THE DOCUMENTATION ARE TO INDICATE AN INTENT AND ARE NOT INTENDED TO BE EXHAUSTIVE. MAKE ALLOWANCES AS REQUIRED.

ISSUED FOR CONSTRUCTION

REV	DATE	AMENDMENT	DSN	DRN	CHKD	APP
0	01.10.19	ISSUED FOR CONSTRUCTION	J.S.	A.C.D.	M.P.	G.B.

ORIG SIZE A1

0 3 6 9 12 15 30m

SCALE 1:300 AT A1

This document must not be copied without PTA's written permission, and the contents thereof must not be imparted to a third party nor be used for any unauthorised purpose.

aurecon

www.aurecongroup.com

505695-0000-DRG-ST-1452

REFERENCES

SCALE : As indicated (@ A1)

DATUM : HORIZONTAL: PCG94 VERTICAL: AHD71

PTA ACCEPTANCE STAMP

DESIGNED J.SPANO

DRAWN A.DAWSON

CHECKED M.PEARCE

APPROVED FOR ISSUE

G.BENTLEY

DATE

Government of Western Australia Public Transport Authority

DETAILED DESIGN FOR THE BELLEVUE DEPOT

HV TESTING FACILITY

STRUCTURAL

ELEVATED PLATFORM PLAN - ZONE 02

PTA Drawing No: 12-A-152-ST0222 REV : 0

Plot Date: 10/1/2019 9:25:30 AM Office: PERTH Filename: BIM 360://505695 - Bellevue Depot/505695-ST-BELLEVUE DEPOT-02B.rvt

NOTES:

1. REFER TO ARCHITECTS DRAWINGS FOR DIMENSIONS AND LEVELS
2. REFER TO THE STRUCTURAL SPECIFICATION FOR H.D. GALVANISING REQUIREMENTS
3. REFER TO SERVICES SUBCONTRACTOR DETAILS FOR SECONDARY STEELWORK TO SUPPORT SERVICES EQUIPMENT AND FOR ISOLATION DETAILS
4. PROVIDE EDGE PROTECTION TO ARCHITECTS DETAILS
5. DESIGN OF FLOOR GRATING TO BE UNDERTAKEN BY D&C CONTRACTOR
6. REFER TO ARCHITECTURAL DRAWINGS FOR TYP. SYSTEM WIDE PROPRIETARY HANDRAIL DETAILS

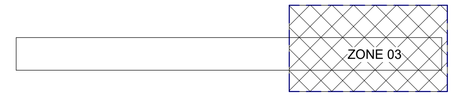

ZONE PLAN

NOTES:

1. DO NO SCALE DRAWINGS. WRITTEN DIMENSIONS GOVERN.
2. ALL DIMENSIONS ARE IN MILLIMETRES UNLESS NOTED OTHERWISE
3. ALL DIMENSIONS SHALL BE VERIFIED ON SITE BEFORE PROCEEDING WITH THE WORK. RELEVANT PARTY SHALL BE NOTIFIED IN WRITING OF ANY DISCREPANCIES.
4. THIS DRAWING MUST BE READ IN CONJUNCTION WITH ALL RELEVANT CONTRACTS, SPECIFICATIONS, REPORTS AND DRAWINGS.

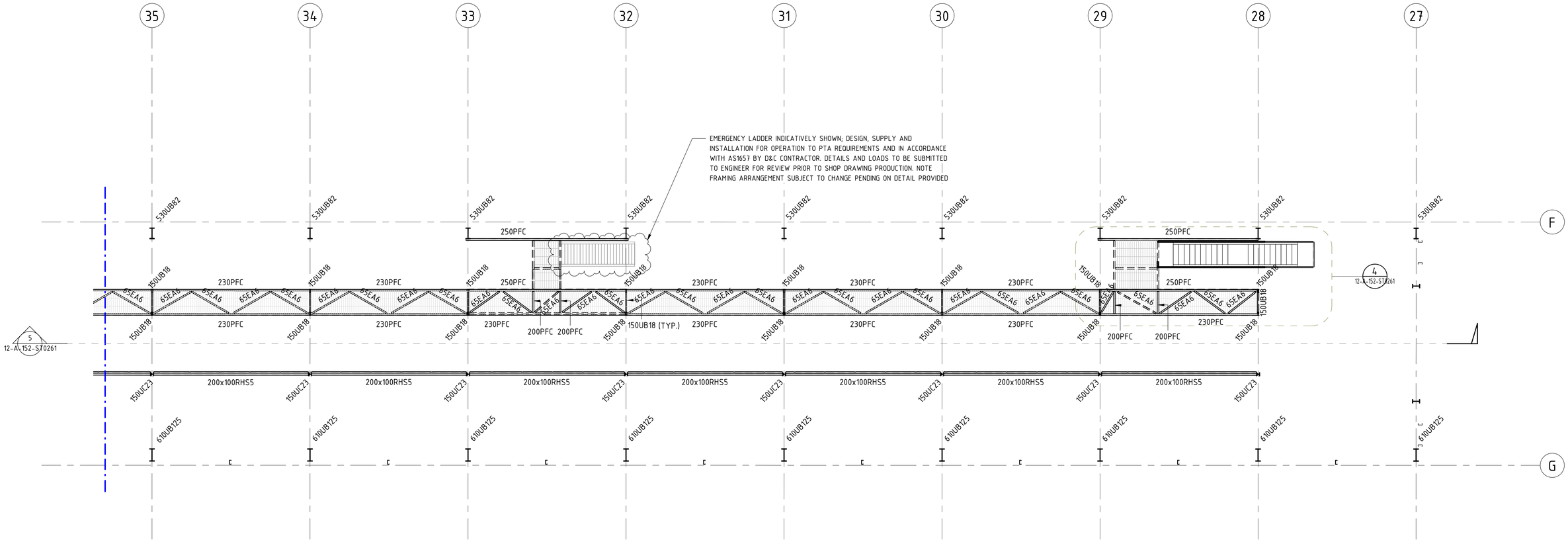

MEZZANINE STEELWORK PLAN (ZONE 3)

1 : 100

USE OF THESE DRAWINGS

1. THIS DRAWING SHALL BE READ IN CONJUNCTION WITH THE DISCIPLINE CONTRACT SPECIFICATION AND OTHER PROJECT DOCUMENTS.
2. DRAWINGS AND DESIGNS UNDERTAKEN BY A SHOP DETAILER SHALL BE PRESENTED TO THE PTA FOR REVIEW AND CONCURRENCE THAT THE DESIGN INTENT HAS BEEN ACHIEVED.
3. THE CONTRACTORS SHALL BE FULLY AWARE OF THE OTHER INTERFACING PACKAGES AND SHALL HAVE DEEMED TO HAVE INCLUDED INTER-TRADE INTERFACES. THE INTERFACES IDENTIFIED IN THE DOCUMENTATION ARE TO INDICATE AN INTENT AND ARE NOT INTENDED TO BE EXHAUSTIVE. MAKE ALLOWANCES AS REQUIRED.

ISSUED FOR CONSTRUCTION

REV	DATE	AMENDMENT	DSN	DRN	CHKD	APP
0	01.10.19	ISSUED FOR CONSTRUCTION	J.S.	A.C.D.	M.P.	G.B.

ORIG SIZE A1

0 1 2 3 4 5 10m

SCALE 1:100 AT A1

This document must not be copied without PTA's written permission, and the contents thereof must not be imparted to a third party nor be used for any unauthorised purpose.

aurecon

www.aurecongroup.com

505695-0000-DRG-ST-1453

REFERENCES

SCALE : As indicated (@ A1)

DATUM : HORIZONTAL: PCG94 VERTICAL: AHD71

PTA ACCEPTANCE STAMP

DESIGNED J.SPANO

DRAWN A.DAWSON

CHECKED M.PEARCE

APPROVED FOR ISSUE

G.BENTLEY

DATE

Government of Western Australia Public Transport Authority

DETAILED DESIGN FOR THE BELLEVUE DEPOT

HV TESTING FACILITY

STRUCTURAL

ELEVATED PLATFORM PLAN - ZONE 03

PTA Drawing No: 12-A-152-ST0223

REV : 0

Plot Date: 10/1/2019 9:25:33 AM Office: PERTH Filename: BIM 360://505695 - Bellevue Depot/505695-ST-BELLEVUE DEPOT-02B.rvt

NOTES:

1. DO NO SCALE DRAWINGS. WRITTEN DIMENSIONS GOVERN.
2. ALL DIMENSIONS ARE IN MILLIMETRES UNLESS NOTED OTHERWISE
3. ALL DIMENSIONS SHALL BE VERIFIED ON SITE BEFORE PROCEEDING WITH THE WORK. RELEVANT PARTY SHALL BE NOTIFIED IN WRITING OF ANY DISCREPANCIES.
4. THIS DRAWING MUST BE READ IN CONJUNCTION WITH ALL RELEVANT CONTRACTS, SPECIFICATIONS, REPORTS AND DRAWINGS.

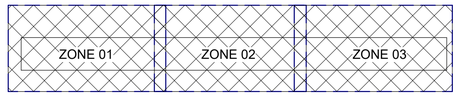

ZONE PLAN

NOTES:

1. DO NO SCALE DRAWINGS. WRITTEN DIMENSIONS GOVERN.
2. ALL DIMENSIONS ARE IN MILLIMETRES UNLESS NOTED OTHERWISE
3. ALL DIMENSIONS SHALL BE VERIFIED ON SITE BEFORE PROCEEDING WITH THE WORK. RELEVANT PARTY SHALL BE NOTIFIED IN WRITING OF ANY DISCREPANCIES.
4. THIS DRAWING MUST BE READ IN CONJUNCTION WITH ALL RELEVANT CONTRACTS, SPECIFICATIONS, REPORTS AND DRAWINGS.

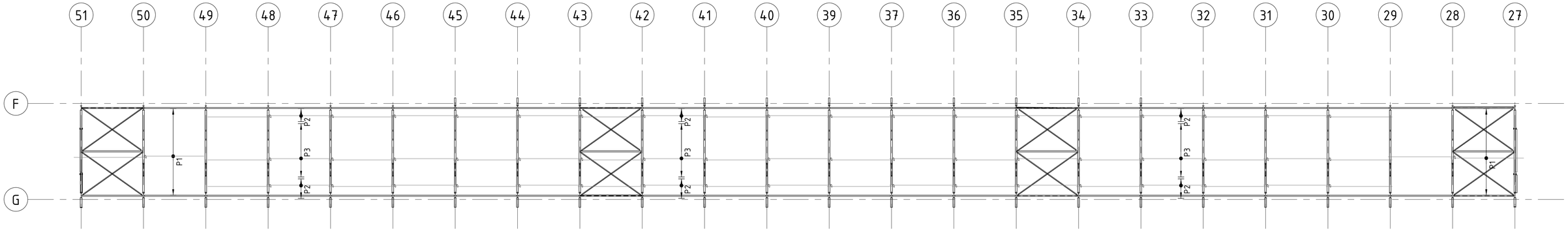

OVERALL ROOF PLAN

1 : 250

USE OF THESE DRAWINGS

1. THIS DRAWING SHALL BE READ IN CONJUNCTION WITH THE DISCIPLINE CONTRACT SPECIFICATION AND OTHER PROJECT DOCUMENTS.
2. DRAWINGS AND DESIGNS UNDERTAKEN BY A SHOP DETAILER SHALL BE PRESENTED TO THE PTA FOR REVIEW AND CONCURRENCE THAT THE DESIGN INTENT HAS BEEN ACHIEVED.
3. THE CONTRACTORS SHALL BE FULLY AWARE OF THE OTHER INTERFACING PACKAGES AND SHALL HAVE DEEMED TO HAVE INCLUDED INTER-TRADE INTERFACES. THE INTERFACES IDENTIFIED IN THE DOCUMENTATION ARE TO INDICATE AN INTENT AND ARE NOT INTENDED TO BE EXHAUSTIVE. MAKE ALLOWANCES AS REQUIRED.

ISSUED FOR CONSTRUCTION

REV	DATE	AMENDMENT	DSN	DRN	CHKD	APP
0	01.10.19	ISSUED FOR CONSTRUCTION	J.S.	A.C.D.	M.P.	G.B.

ORIG SIZE A1

0 0.5 1 1.5 2 2.5 5m

SCALE 1:50 AT A1

This document must not be copied without PTA's written permission, and the contents thereof must not be imparted to a third party nor be used for any unauthorised purpose.

aurecon

www.aurecongroup.com

505695-0000-DRG-ST-1554

REFERENCES

SCALE : As indicated (@ A1)

DATUM : HORIZONTAL: PCG94 VERTICAL: AHD71

PTA ACCEPTANCE STAMP

DESIGNED J.SPANO

DRAWN A.DAWSON

CHECKED M.PEARCE

APPROVED FOR ISSUE G.BENTLEY

DATE

Government of Western Australia Public Transport Authority

DETAILED DESIGN FOR THE BELLEVUE DEPOT

HV TESTING FACILITY

STRUCTURAL

ROOF FRAMING PLAN

PTA Drawing No: 12-A-152-ST0230

REV : 0

NOTES :

1. REFER TO ARCHITECT'S DRAWINGS FOR DIMENSIONS AND LEVELS
2. REFER TO 12-A-152-ST0022 TO ST0031 FOR STANDARD CONNECTIONS DETAILS
3. REFER TO THE STRUCTURAL SPECIFICATION FOR H.D. GALAVANISING REQUIREMENTS
4. CONTRACTOR TO NOTE THAT THE MAIN WAREHOUSE FRAME ROOF BRACING IS DESIGNED TO FUNCTION IN THE PERMANENT WORKS CASE AS TENSION ONLY BRACES AND TO MAKE DUE ALLOWANCE WHEN CONSIDERING TEMPORARY WORKS REQUIREMENTS FOR SAFE ERECTION
5. BRIDGING REQUIREMENTS AS NOTED ON PLANS, REFER TO MANUFACTURES SPECIFICATION
6. GIRTS AND PURLINS TO BE PROVIDED WITH A MINIMUM ZINC COATING CLASS OF Z450
8. PROVIDE A 50x50x3 COLD FORMED ANGLE TRIMMER BETWEEN ALL PURLINS AT ROO HIP, VALLEY AND PENETRATION LOCATIONS TO SUPPORT CUT EDGES OF ROOF SHEETING
9. REFER TO SERVICES SUBCONTRACTOR DETAILS FOR SECONDARY STEELWORK TO SUPPORT SERVICES EQUIPMENT AND ISOLATION DETAILS
10. PROVIDE EDGE PROTECTION TO ARCHITECTS DETAILS

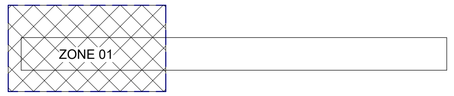

ZONE PLAN

NOTES:

1. DO NO SCALE DRAWINGS. WRITTEN DIMENSIONS GOVERN.
2. ALL DIMENSIONS ARE IN MILLIMETRES UNLESS NOTED OTHERWISE
3. ALL DIMENSIONS SHALL BE VERIFIED ON SITE BEFORE PROCEEDING WITH THE WORK. RELEVANT PARTY SHALL BE NOTIFIED IN WRITING OF ANY DISCREPANCIES.
4. THIS DRAWING MUST BE READ IN CONJUNCTION WITH ALL RELEVANT CONTRACTS, SPECIFICATIONS, REPORTS AND DRAWINGS.

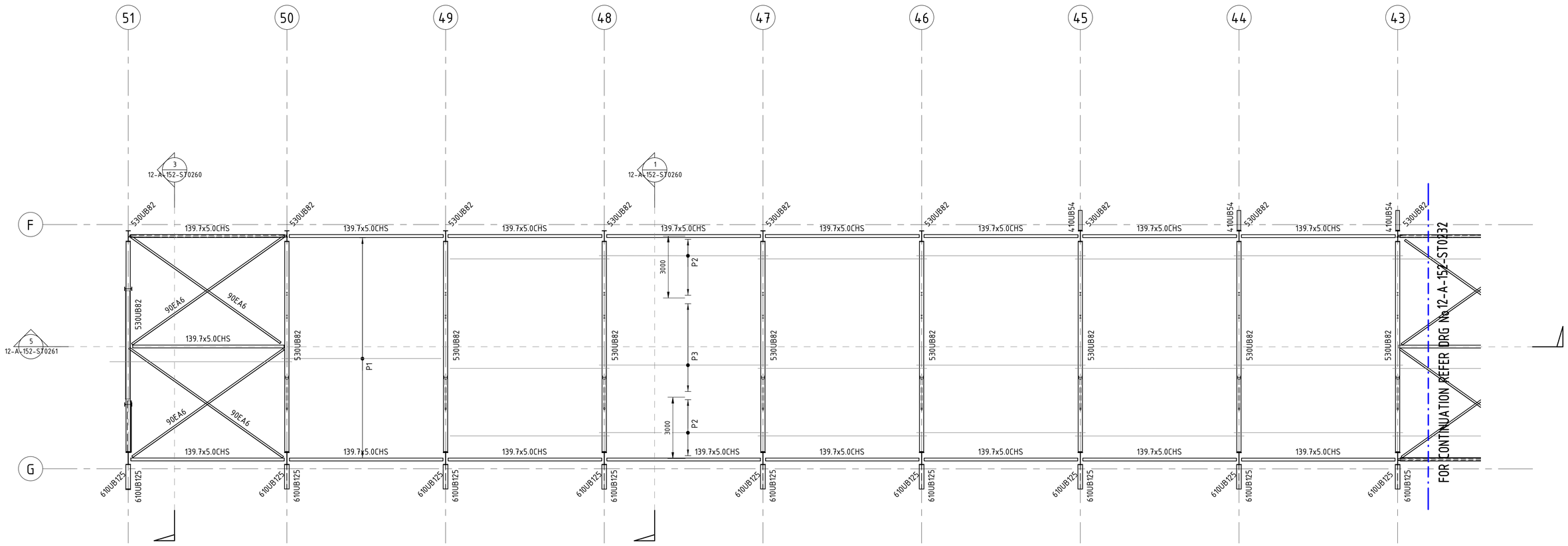

OVERALL ROOF PLAN (ZONE 1)

1 : 100

PURLIN SCHEDULE

TAG	MEMBER	COMMENTS
P1	Z20024 AT 600 CTS	1 ROW OF BRIDGING (MIN 2 LAPPED SPANS)
P2	Z20024 AT 1200 CTS	1 ROW OF BRIDGING (MIN 4 LAPPED SPANS)
P3	Z20024 AT 1500 CTS	1 ROW OF BRIDGING (MIN 4 LAPPED SPANS)

NOTES:

1. PURLINS/GIRTS TO BE LAPPED WHERE SHOWN. LAP LENGTH TO BE AS PER MANUFACTURER'S RECOMMENDATIONS (MIN 15% OF SPAN).
2. PURLINS/GIRTS TO BE PROVIDED WITH MIN 1 MIDSPAN BRIDGING FOR ALL SPANS ABOVE 4m (U.N.O).

USE OF THESE DRAWINGS

1. THIS DRAWING SHALL BE READ IN CONJUNCTION WITH THE DISCIPLINE CONTRACT SPECIFICATION AND OTHER PROJECT DOCUMENTS.
2. DRAWINGS AND DESIGNS UNDERTAKEN BY A SHOP DETAILER SHALL BE PRESENTED TO THE PTA FOR REVIEW AND CONCURRENCE THAT THE DESIGN INTENT HAS BEEN ACHIEVED.
3. THE CONTRACTORS SHALL BE FULLY AWARE OF THE OTHER INTERFACING PACKAGES AND SHALL HAVE DEEMED TO HAVE INCLUDED INTER-TRADE INTERFACES. THE INTERFACES IDENTIFIED IN THE DOCUMENTATION ARE TO INDICATE AN INTENT AND ARE NOT INTENDED TO BE EXHAUSTIVE. MAKE ALLOWANCES AS REQUIRED.

ISSUED FOR CONSTRUCTION

REV	DATE	AMENDMENT	DSN	DRN	CHKD	APP
0	01.10.19	ISSUED FOR CONSTRUCTION	J.S.	A.C.D.	M.P.	G.B.

ORIG SIZE A1

0 3 6 9 12 15 30m
SCALE 1:300 AT A1

This document must not be copied without PTA's written permission, and the contents thereof must not be imparted to a third party nor be used for any unauthorised purpose.

aurecon
www.aurecongroup.com

505695-0000-DRG-ST-1555

REFERENCES

SCALE : As indicated (@ A1)
DATUM : HORIZONTAL: PCG94 VERTICAL: AHD71
PTA ACCEPTANCE STAMP

DESIGNED J.SPANO
DRAWN A.DAWSON
CHECKED M.PEARCE
APPROVED FOR ISSUE
G.BENTLEY
DATE

Government of Western Australia Public Transport Authority

DETAILED DESIGN FOR THE BELLEVUE DEPOT

HV TESTING FACILITY
STRUCTURAL
ROOF FRAMING PLAN - ZONE 01

PTA Drawing No: 12-A-152-ST0231 REV : 0

Plot Date: 10/1/2019 9:25:37 AM Office: PERTH Filename: BIM 360://505695 - Bellevue Depot/505695-ST-BELLEVUE DEPOT-02B.rvt

NOTES :

1. REFER TO ARCHITECT'S DRAWINGS FOR DIMENSIONS AND LEVELS
2. REFER TO 12-A-152-ST0022 TO ST0031 FOR STANDARD CONNECTIONS DETAILS
3. REFER TO THE STRUCTURAL SPECIFICATION FOR H.D. GALAVANISING REQUIREMENTS
4. CONTRACTOR TO NOTE THAT THE MAIN WAREHOUSE FRAME ROOF BRACING IS DESIGNED TO FUNCTION IN THE PERMANENT WORKS CASE AS TENSION ONLY BRACES AND TO MAKE DUE ALLOWANCE WHEN CONSIDERING TEMPORARY WORKS REQUIREMENTS FOR SAFE ERECTION
5. BRIDGING REQUIREMENTS AS NOTED ON PLANS, REFER TO MANUFACTURES SPECIFICATION
6. GIRTS AND PURLINS TO BE PROVIDED WITH A MINIMUM ZINC COATING CLASS OF Z450
8. PROVIDE A 50x50x3 COLD FORMED ANGLE TRIMMER BETWEEN ALL PURLINS AT ROO HIP, VALLEY AND PENETRATION LOCATIONS TO SUPPORT CUT EDGES OF ROOF SHEETING
9. REFER TO SERVICES SUBCONTRACTOR DETAILS FOR SECONDARY STEELWORK TO SUPPORT SERVICES EQUIPMENT AND ISOLATION DETAILS
10. PROVIDE EDGE PROTECTION TO ARCHITECTS DETAILS

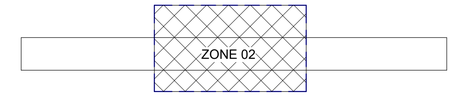

ZONE PLAN

NOTES:

1. DO NO SCALE DRAWINGS. WRITTEN DIMENSIONS GOVERN.
2. ALL DIMENSIONS ARE IN MILLIMETRES UNLESS NOTED OTHERWISE
3. ALL DIMENSIONS SHALL BE VERIFIED ON SITE BEFORE PROCEEDING WITH THE WORK. RELEVANT PARTY SHALL BE NOTIFIED IN WRITING OF ANY DISCREPANCIES.
4. THIS DRAWING MUST BE READ IN CONJUNCTION WITH ALL RELEVANT CONTRACTS, SPECIFICATIONS, REPORTS AND DRAWINGS.

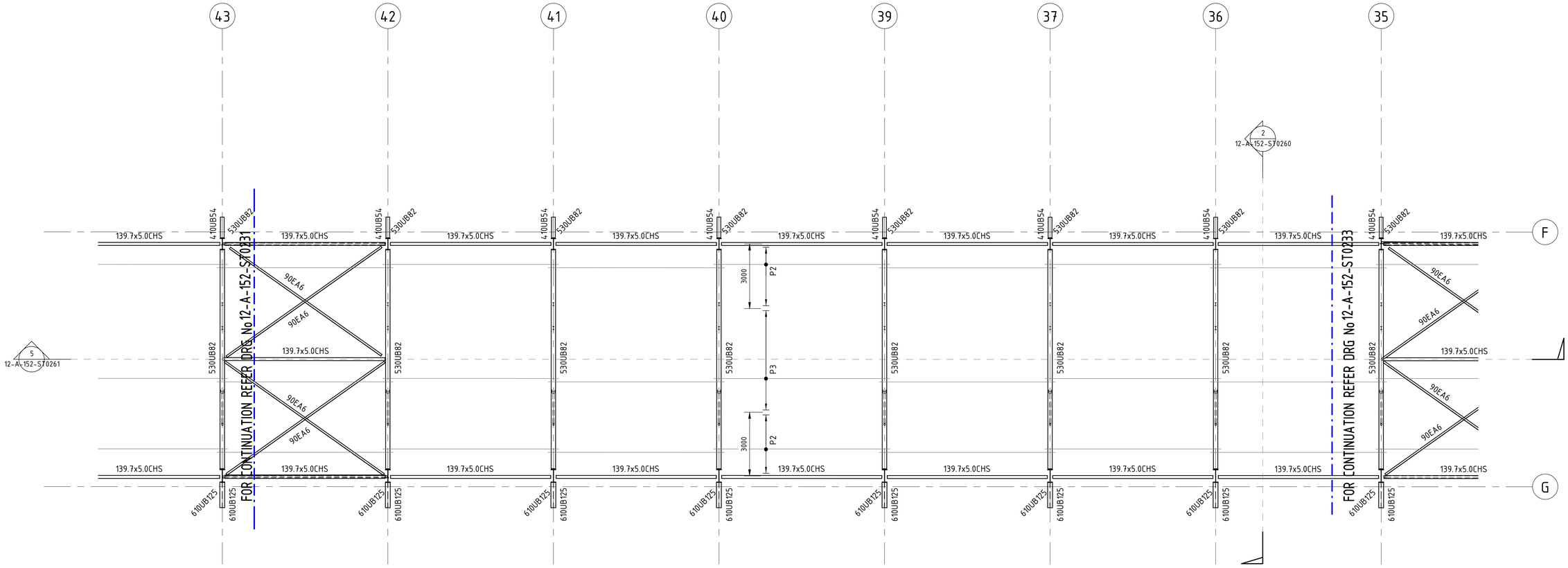

OVERALL ROOF PLAN (ZONE 2)

1 : 100

PURLIN SCHEDULE

TAG	MEMBER	COMMENTS
P1	Z20024 AT 600 CTS	1 ROW OF BRIDGING (MIN 2 LAPPED SPANS)
P2	Z20024 AT 1200 CTS	1 ROW OF BRIDGING (MIN 4 LAPPED SPANS)
P3	Z20024 AT 1500 CTS	1 ROW OF BRIDGING (MIN 4 LAPPED SPANS)

NOTES:

1. PURLINS/GIRTS TO BE LAPPED WHERE SHOWN. LAP LENGTH TO BE AS PER MANUFACTURER'S RECOMMENDATIONS (MIN 15% OF SPAN).
2. PURLINS/GIRTS TO BE PROVIDED WITH MIN 1 MIDSPAN BRIDGING FOR ALL SPANS ABOVE 4m (U.N.O).

USE OF THESE DRAWINGS

1. THIS DRAWING SHALL BE READ IN CONJUNCTION WITH THE DISCIPLINE CONTRACT SPECIFICATION AND OTHER PROJECT DOCUMENTS.
2. DRAWINGS AND DESIGNS UNDERTAKEN BY A SHOP DETAILER SHALL BE PRESENTED TO THE PTA FOR REVIEW AND CONCURRENCE THAT THE DESIGN INTENT HAS BEEN ACHIEVED.
3. THE CONTRACTORS SHALL BE FULLY AWARE OF THE OTHER INTERFACING PACKAGES AND SHALL HAVE DEEMED TO HAVE INCLUDED INTER-TRADE INTERFACES. THE INTERFACES IDENTIFIED IN THE DOCUMENTATION ARE TO INDICATE AN INTENT AND ARE NOT INTENDED TO BE EXHAUSTIVE. MAKE ALLOWANCES AS REQUIRED.

ISSUED FOR CONSTRUCTION

REV	DATE	AMENDMENT	DSN	DRN	CHKD	APP
0	01.10.19	ISSUED FOR CONSTRUCTION	J.S.	A.C.D.	M.P.	G.B.

ORIG SIZE A1

SCALE 1:100 AT A1

This document must not be copied without PTA's written permission, and the contents thereof must not be imparted to a third party nor be used for any unauthorised purpose.

aurecon
www.aurecongroup.com

505695-0000-DRG-ST-1556

REFERENCES

SCALE : As indicated (@ A1)
DATUM :
HORIZONTAL: PCG94
VERTICAL: AHD71

PTA ACCEPTANCE STAMP

DESIGNED J.SPANO
DRAWN A.DAWSON
CHECKED M.PEARCE
APPROVED FOR ISSUE
G.BENTLEY
DATE

Government of Western Australia Public Transport Authority

DETAILED DESIGN FOR THE BELLEVUE DEPOT

HV TESTING FACILITY
STRUCTURAL
ROOF FRAMING PLAN - ZONE 02

PTA Drawing No: 12-A-152-ST0232 REV : 0

NOTES :

1. REFER TO ARCHITECT'S DRAWINGS FOR DIMENSIONS AND LEVELS
2. REFER TO 12-A-152-ST0022 TO ST0031 FOR STANDARD CONNECTIONS DETAILS
3. REFER TO THE STRUCTURAL SPECIFICATION FOR H.D. GALAVANISING REQUIREMENTS
4. CONTRACTOR TO NOTE THAT THE MAIN WAREHOUSE FRAME ROOF BRACING IS DESIGNED TO FUNCTION IN THE PERMANENT WORKS CASE AS TENSION ONLY BRACES AND TO MAKE DUE ALLOWANCE WHEN CONSIDERING TEMPORARY WORKS REQUIREMENTS FOR SAFE ERECTION
5. BRIDGING REQUIREMENTS AS NOTED ON PLANS, REFER TO MANUFACTURES SPECIFICATION
6. GIRTS AND PURLINS TO BE PROVIDED WITH A MINIMUM ZINC COATING CLASS OF Z450
8. PROVIDE A 50x50x3 COLD FORMED ANGLE TRIMMER BETWEEN ALL PURLINS AT ROO HIP, VALLEY AND PENETRATION LOCATIONS TO SUPPORT CUT EDGES OF ROOF SHEETING
9. REFER TO SERVICES SUBCONTRACTOR DETAILS FOR SECONDARY STEELWORK TO SUPPORT SERVICES EQUIPMENT AND ISOLATION DETAILS
10. PROVIDE EDGE PROTECTION TO ARCHITECTS DETAILS

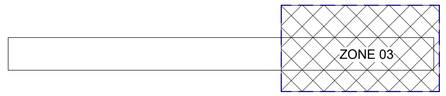

ZONE PLAN

NOTES:

1. DO NO SCALE DRAWINGS. WRITTEN DIMENSIONS GOVERN.
2. ALL DIMENSIONS ARE IN MILLIMETRES UNLESS NOTED OTHERWISE
3. ALL DIMENSIONS SHALL BE VERIFIED ON SITE BEFORE PROCEEDING WITH THE WORK. RELEVANT PARTY SHALL BE NOTIFIED IN WRITING OF ANY DISCREPANCIES.
4. THIS DRAWING MUST BE READ IN CONJUNCTION WITH ALL RELEVANT CONTRACTS, SPECIFICATIONS, REPORTS AND DRAWINGS.

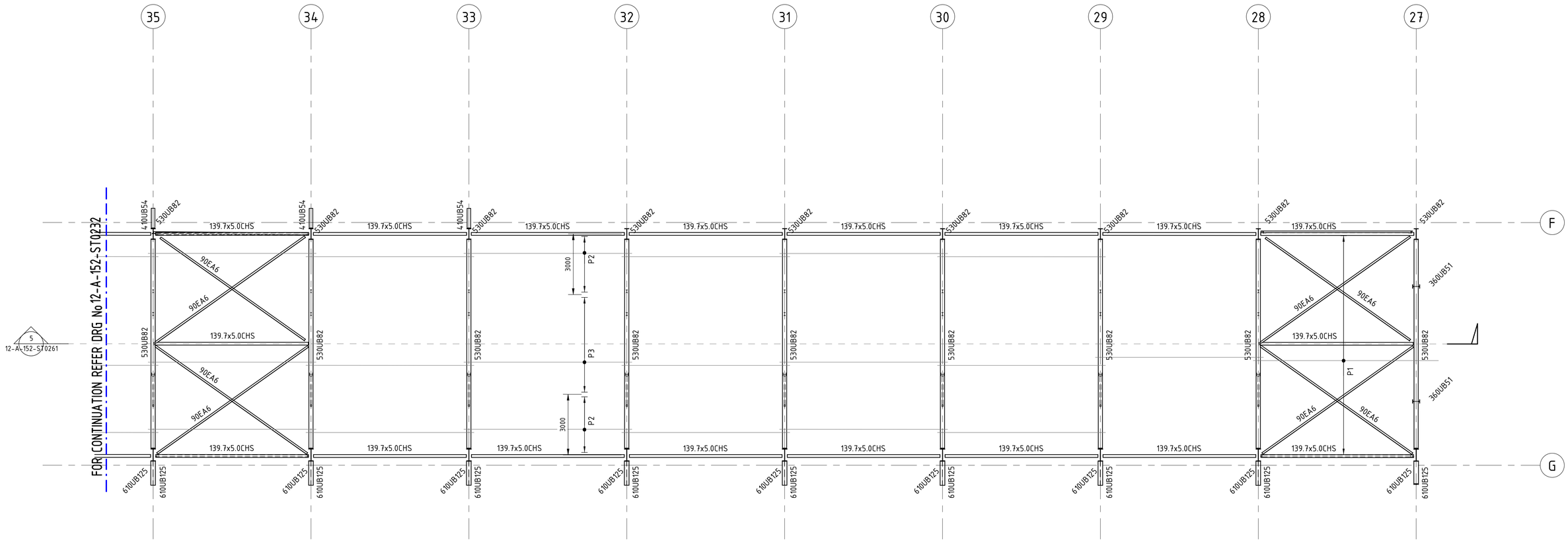

OVERALL ROOF PLAN (ZONE 3)

1 : 100

PURLIN SCHEDULE

TAG	MEMBER	COMMENTS
P1	Z20024 AT 600 CTS	1 ROW OF BRIDGING (MIN 2 LAPPED SPANS)
P2	Z20024 AT 1200 CTS	1 ROW OF BRIDGING (MIN 4 LAPPED SPANS)
P3	Z20024 AT 1500 CTS	1 ROW OF BRIDGING (MIN 4 LAPPED SPANS)

NOTES:

1. PURLINS/GIRTS TO BE LAPPED WHERE SHOWN. LAP LENGTH TO BE AS PER MANUFACTURER'S RECOMMENDATIONS (MIN 15% OF SPAN).
2. PURLINS/GIRTS TO BE PROVIDED WITH MIN 1 MIDSPAN BRIDGING FOR ALL SPANS ABOVE 4m (U.N.O).

USE OF THESE DRAWINGS

1. THIS DRAWING SHALL BE READ IN CONJUNCTION WITH THE DISCIPLINE CONTRACT SPECIFICATION AND OTHER PROJECT DOCUMENTS.
2. DRAWINGS AND DESIGNS UNDERTAKEN BY A SHOP DETAILER SHALL BE PRESENTED TO THE PTA FOR REVIEW AND CONCURRENCE THAT THE DESIGN INTENT HAS BEEN ACHIEVED.
3. THE CONTRACTORS SHALL BE FULLY AWARE OF THE OTHER INTERFACING PACKAGES AND SHALL HAVE DEEMED TO HAVE INCLUDED INTER-TRADE INTERFACES. THE INTERFACES IDENTIFIED IN THE DOCUMENTATION ARE TO INDICATE AN INTENT AND ARE NOT INTENDED TO BE EXHAUSTIVE. MAKE ALLOWANCES AS REQUIRED.

ISSUED FOR CONSTRUCTION

REV	DATE	AMENDMENT	DSN	DRN	CHKD	APP
0	01.10.19	ISSUED FOR CONSTRUCTION	J.S.	A.C.D.	M.P.	G.B.

ORIG SIZE A1

0 1 2 3 4 5 10m
SCALE 1:100 AT A1

This document must not be copied without PTA's written permission, and the contents thereof must not be imparted to a third party nor be used for any unauthorised purpose.

aurecon
www.aurecongroup.com

505695-0000-DRG-ST-1557

REFERENCES

SCALE : As indicated (@ A1)
DATUM :
HORIZONTAL: PCG94
VERTICAL: AHD71

PTA ACCEPTANCE STAMP

DESIGNED J.SPANO
DRAWN A.DAWSON
CHECKED M.PEARCE
APPROVED FOR ISSUE
G.BENTLEY
DATE

Government of Western Australia Public Transport Authority

DETAILED DESIGN FOR THE BELLEVUE DEPOT

HV TESTING FACILITY
STRUCTURAL
ROOF FRAMING PLAN - ZONE 03

PTA Drawing No: 12-A-152-ST0233 REV : 0

Plot Date: 10/1/2019 9:25:44 AM Office: PERTH Filename: BIM 360://505695 - Bellevue Depot/505695-ST-BELLEVUE DEPOT-02B.rvt

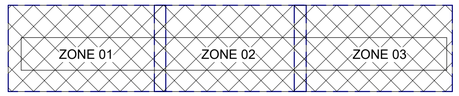

ZONE PLAN

NOTES:

1. DO NO SCALE DRAWINGS. WRITTEN DIMENSIONS GOVERN.
2. ALL DIMENSIONS ARE IN MILLIMETRES UNLESS NOTED OTHERWISE
3. ALL DIMENSIONS SHALL BE VERIFIED ON SITE BEFORE PROCEEDING WITH THE WORK. RELEVANT PARTY SHALL BE NOTIFIED IN WRITING OF ANY DISCREPANCIES.
4. THIS DRAWING MUST BE READ IN CONJUNCTION WITH ALL RELEVANT CONTRACTS, SPECIFICATIONS, REPORTS AND DRAWINGS.

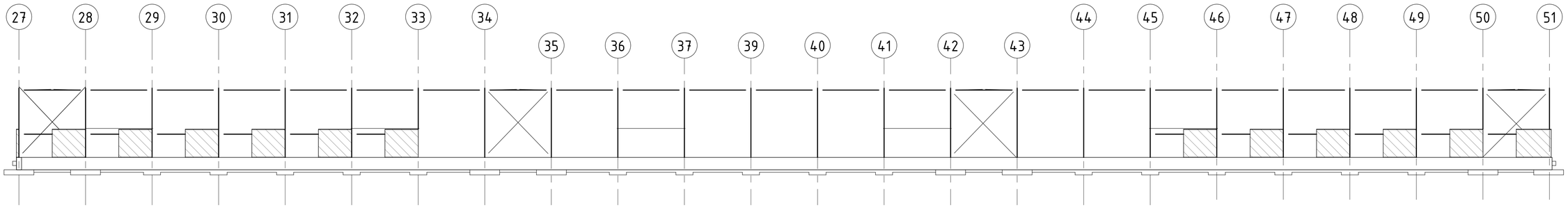

NORTH ELEVATION

1 : 250

USE OF THESE DRAWINGS

1. THIS DRAWING SHALL BE READ IN CONJUNCTION WITH THE DISCIPLINE CONTRACT SPECIFICATION AND OTHER PROJECT DOCUMENTS.
2. DRAWINGS AND DESIGNS UNDERTAKEN BY A SHOP DETAILER SHALL BE PRESENTED TO THE PTA FOR REVIEW AND CONCURRENCE THAT THE DESIGN INTENT HAS BEEN ACHIEVED.
3. THE CONTRACTORS SHALL BE FULLY AWARE OF THE OTHER INTERFACING PACKAGES AND SHALL HAVE DEEMED TO HAVE INCLUDED INTER-TRADE INTERFACES. THE INTERFACES IDENTIFIED IN THE DOCUMENTATION ARE TO INDICATE AN INTENT AND ARE NOT INTENDED TO BE EXHAUSTIVE. MAKE ALLOWANCES AS REQUIRED.

ISSUED FOR CONSTRUCTION

REV	DATE	AMENDMENT	DSN	DRN	CHKD	APP
0	01.10.19	ISSUED FOR CONSTRUCTION	J.S.	A.C.D.	M.P.	G.B.

ORIG SIZE A1

0 2.5 5 7.5 10 12.5 25m

SCALE 1:250 AT A1

This document must not be copied without PTA's written permission, and the contents thereof must not be imparted to a third party nor be used for any unauthorised purpose.

aurecon

www.aurecongroup.com

505695-0000-DRG-ST-1633

REFERENCES

SCALE : As indicated (@ A1)

DATUM : HORIZONTAL: PCG94 VERTICAL: AHD71

PTA ACCEPTANCE STAMP

DESIGNED J.SPANO

DRAWN A.DAWSON

CHECKED M.PEARCE

APPROVED FOR ISSUE G.BENTLEY

DATE

Government of Western Australia Public Transport Authority

DETAILED DESIGN FOR THE BELLEVUE DEPOT

HV TESTING FACILITY

STRUCTURAL

NORTH ELEVATION

PTA Drawing No: 12-A-152-ST0250

REV : 0

Plot Date: 10/1/2019 9:25:47 AM Office: PERTH Filename: BIM 360://505695 - Bellevue Depot/505695-ST-BELLEVUE DEPOT-02B.rvt

ZONE 01

ZONE PLAN

NOTES:

1. DO NO SCALE DRAWINGS. WRITTEN DIMENSIONS GOVERN.
2. ALL DIMENSIONS ARE IN MILLIMETRES UNLESS NOTED OTHERWISE
3. ALL DIMENSIONS SHALL BE VERIFIED ON SITE BEFORE PROCEEDING WITH THE WORK. RELEVANT PARTY SHALL BE NOTIFIED IN WRITING OF ANY DISCREPANCIES.
4. THIS DRAWING MUST BE READ IN CONJUNCTION WITH ALL RELEVANT CONTRACTS, SPECIFICATIONS, REPORTS AND DRAWINGS.

NOTES:

1. REFER TO ARCHITECTS DRAWINGS FOR DIMENSIONS AND LEVELS
2. REFER TO 12-A-152-ST0022 TO ST0031 FOR STANDARD CONNECTIONS DETAILS
3. REFER TO 12-A-152-ST0003 & ST0004 FOR STANDARD NOTES
4. REFER TO THE STRUCTURAL SPECIFICATION FOR H.D. GALVANISING REQUIREMENTS
5. CONTRACTOR TO NOTE THAT THE MAIN WAREHOUSE FRAME ROOF BRACING ARE DESIGNED TO FUNCTION IN THE PERMANENT WORKS CASE AS TENSION ONLY BRACES AND TO MAKE DUE ALLOWANCE WHEN CONSIDERING TEMPORARY WORKS REQUIREMENTS FOR SAFE ERECTION
6. BRIDGING REQUIREMENTS AS NOTED ON PLANS, REFER TO MANUFACTURES' SPECIFICATIONS.
7. GIRTS AND PURLINS TO BE PROVIDED WITH A MINIMUM ZINC COATING CLASS OF Z450
8. PROVIDE A 50X50X3 COLD FORMED ANGLE TRIMMER BETWEEN ALL PURLINS AT ROOF HIP, VALLEY AND PENETRATION LOCATIONS TO SUPPORT CUT EDGES OF ROOF SHEETING
9. REFER TO SERVICES SUBCONTRACTOR DETAILS FOR SECONDARY STEELWORK TO SUPPORT SERVICES EQUIPMENT AND FOR ISOLATION DETAILS
10. PROVIDE EDGE PROTECTION TO ARCHITECTS DETAILS
11. ALL DIMENSIONS TO PRECAST PANELS ARE NOMINAL ONLY AND SHOULD BE REFERENCED WITH THE ARCHITECTS DRAWINGS. THESE SHALL BE CONFIRMED WITH THE PRECAST CONTRACTOR
12. REFER TO THE ARCHITECTS DRAWINGS FOR REBATES, CHAMFERS, DRIPS, SEALS, BAFFLES, ETC. AND EXTENT OF FINISHES
13. DOWEL TUBE SPACING ON PRECAST SHOP DRAWINGS SHALL INCORPORATE THE SURVEYED AS BUILT SETOUT OF DOWELS
14. IT IS THE CONTRACTORS RESPONSIBILITY TO CO-ORDINATE ALL PENETRATIONS FOR SERVICES ETC. ALL PENETRATIONS SHALL BE SHOWN ON SHOP DRAWINGS FOR APPROVAL PRIOR TO FABRICATION OF ANY PANEL
15. REFER TO THE ARCHITECTS DRAWINGS FOR ALL JOINTING DETAILS

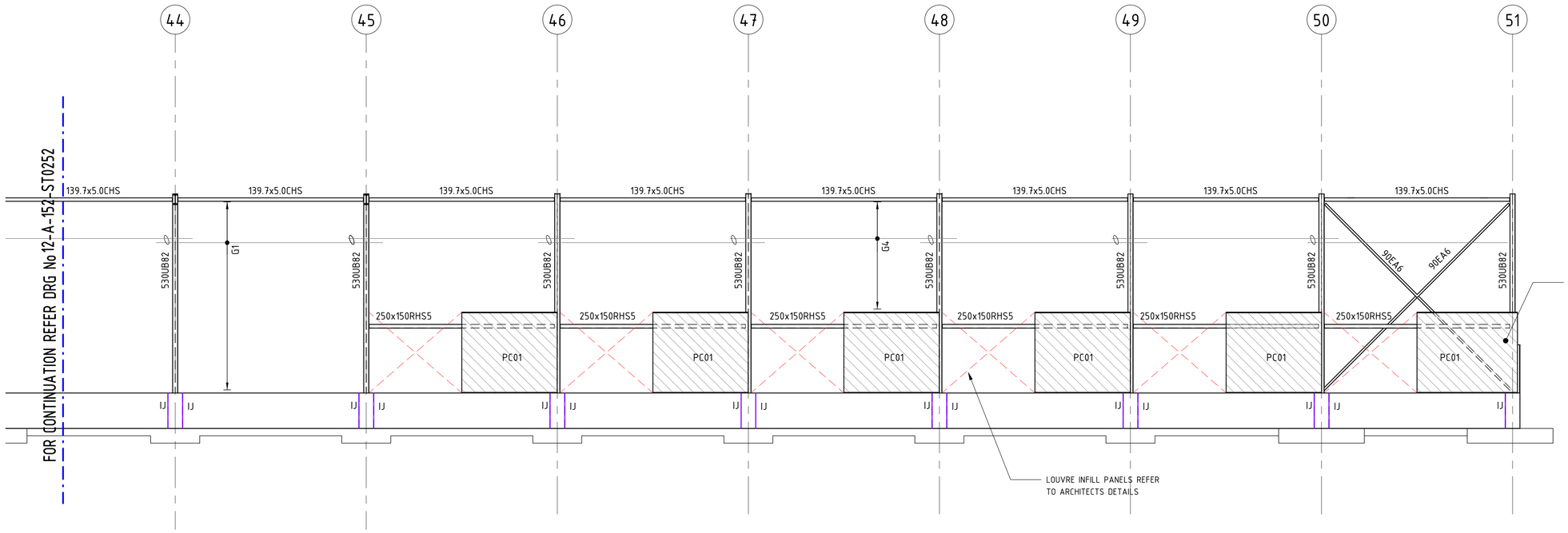

NORTH ELEVATION (ZONE 1)

1 : 100

GIRT SCHEDULE

TAG	MEMBER	COMMENTS
G1	Z20024 AT 1200 CTS	1 ROW OF BRIDGING (MIN 4 LAPPED SPANS)
G2	Z20019 AT 1200CTS	(SINGLE SPAN)
G3	Z20019 AT 600CTS	(SINGLE SPAN)
G4	Z20019 AT 600CTS	MIN 4 LAPPED SPANS

NOTES:

1. PURLINS/GIRTS TO BE LAPPED WHERE SHOWN. LAP LENGTH TO BE AS PER MANUFACTURER'S RECOMMENDATIONS (MIN 15% OF SPAN).
2. PURLINS/GIRTS TO BE PROVIDED WITH MIN 1 MIDSPAN BRIDGING FOR ALL SPANS ABOVE 4m (U.N.O).
3. PROVIDE GIRT HANGERS/SAG RODS/BRIDGING TO MANUFACTURERS DETAILS

USE OF THESE DRAWINGS

1. THIS DRAWING SHALL BE READ IN CONJUNCTION WITH THE DISCIPLINE CONTRACT SPECIFICATION AND OTHER PROJECT DOCUMENTS.
2. DRAWINGS AND DESIGNS UNDERTAKEN BY A SHOP DETAILER SHALL BE PRESENTED TO THE PTA FOR REVIEW AND CONCURRENCE THAT THE DESIGN INTENT HAS BEEN ACHIEVED.
3. THE CONTRACTORS SHALL BE FULLY AWARE OF THE OTHER INTERFACING PACKAGES AND SHALL HAVE DEEMED TO HAVE INCLUDED INTER-TRADE INTERFACES. THE INTERFACES IDENTIFIED IN THE DOCUMENTATION ARE TO INDICATE AN INTENT AND ARE NOT INTENDED TO BE EXHAUSTIVE. MAKE ALLOWANCES AS REQUIRED.

ISSUED FOR CONSTRUCTION

REV	DATE	AMENDMENT	DSN	DRN	CHKD	APP
0	01.10.19	ISSUED FOR CONSTRUCTION	J.S.	A.C.D.	M.P.	G.B.

ORIG SIZE A1

0 1 2 3 4 5 10m

SCALE 1:100 AT A1

This document must not be copied without PTA's written permission, and the contents thereof must not be imparted to a third party nor be used for any unauthorised purpose.

aurecon

www.aurecongroup.com

505695-0000-DRG-ST-1634

REFERENCES

SCALE : As indicated (@ A1)

DATUM : HORIZONTAL: PCG94 VERTICAL: AHD71

PTA ACCEPTANCE STAMP

DESIGNED J.SPANO

DRAWN A.DAWSON

CHECKED M.PEARCE

APPROVED FOR ISSUE

G.BENTLEY

DATE

Government of Western Australia Public Transport Authority

DETAILED DESIGN FOR THE BELLEVUE DEPOT

HV TESTING FACILITY

STRUCTURAL

NORTH ELEVATION - ZONE 01

PTA Drawing No: 12-A-152-ST0251

REV : 0

Plot Date: 10/1/2019 9:25:50 AM Office: Filename: BIM 360://505695 - Bellevue Depot/505695-ST-BELLEVUE DEPOT-02B.rvt

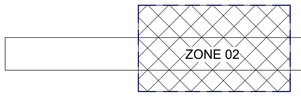

ZONE PLAN

NOTES:

1. DO NO SCALE DRAWINGS. WRITTEN DIMENSIONS GOVERN.
2. ALL DIMENSIONS ARE IN MILLIMETRES UNLESS NOTED OTHERWISE
3. ALL DIMENSIONS SHALL BE VERIFIED ON SITE BEFORE PROCEEDING WITH THE WORK. RELEVANT PARTY SHALL BE NOTIFIED IN WRITING OF ANY DISCREPANCIES.
4. THIS DRAWING MUST BE READ IN CONJUNCTION WITH ALL RELEVANT CONTRACTS, SPECIFICATIONS, REPORTS AND DRAWINGS.

NOTES:

1. REFER TO ARCHITECTS DRAWINGS FOR DIMENSIONS AND LEVELS
2. REFER TO 12-A-152-ST0022 TO ST0031 FOR STANDARD CONNECTIONS DETAILS
3. REFER TO 12-A-152-ST0003 & ST0004 FOR STANDARD NOTES
4. REFER TO THE STRUCTURAL SPECIFICATION FOR H.D. GALVANISING REQUIREMENTS
5. CONTRACTOR TO NOTE THAT THE MAIN WAREHOUSE FRAME ROOF BRACING ARE DESIGNED TO FUNCTION IN THE PERMANENT WORKS CASE AS TENSION ONLY BRACES AND TO MAKE DUE ALLOWANCE WHEN CONSIDERING TEMPORARY WORKS REQUIREMENTS FOR SAFE ERECTION
6. BRIDGING REQUIREMENTS AS NOTED ON PLANS, REFER TO MANUFACTURES' SPECIFICATIONS.
7. GIRTS AND PURLINS TO BE PROVIDED WITH A MINIMUM ZINC COATING CLASS OF Z450
8. PROVIDE A 50X50X3 COLD FORMED ANGLE TRIMMER BETWEEN ALL PURLINS AT ROOF HIP, VALLEY AND PENETRATION LOCATIONS TO SUPPORT CUT EDGES OF ROOF SHEETING
9. REFER TO SERVICES SUBCONTRACTOR DETAILS FOR SECONDARY STEELWORK TO SUPPORT SERVICES EQUIPMENT AND FOR ISOLATION DETAILS
10. PROVIDE EDGE PROTECTION TO ARCHITECTS DETAILS
11. ALL DIMENSIONS TO PRECAST PANELS ARE NOMINAL ONLY AND SHOULD BE REFERENCED WITH THE ARCHITECTS DRAWINGS. THESE SHALL BE CONFIRMED WITH THE PRECAST CONTRACTOR
12. REFER TO THE ARCHITECTS DRAWINGS FOR REBATES, CHAMFERS, DRIPS, SEALS, BAFFLES, ETC. AND EXTENT OF FINISHES
13. DOWEL TUBE SPACING ON PRECAST SHOP DRAWINGS SHALL INCORPORATE THE SURVEYED AS BUILT SETOUT OF DOWELS
14. IT IS THE CONTRACTORS RESPONSIBILITY TO CO-ORDINATE ALL PENETRATIONS FOR SERVICES ETC. ALL PENETRATIONS SHALL BE SHOWN ON SHOP DRAWINGS FOR APPROVAL PRIOR TO FABRICATION OF ANY PANEL
15. REFER TO THE ARCHITECTS DRAWINGS FOR ALL JOINTING DETAILS

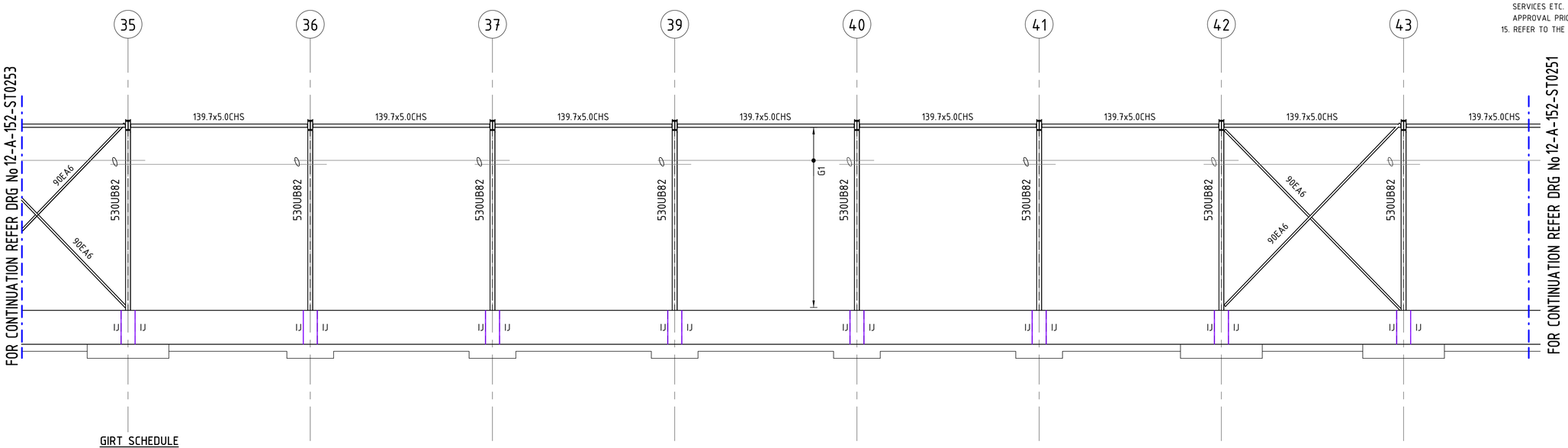

NORTH ELEVATION (ZONE 2)

1 : 100

GIRT SCHEDULE

TAG	MEMBER	COMMENTS
G1	Z20024 AT 1200 CTS	1 ROW OF BRIDGING (MIN 4 LAPPED SPANS)
G2	Z20019 AT 1200CTS	(SINGLE SPAN)
G3	Z20019 AT 600CTS	(SINGLE SPAN)
G4	Z20019 AT 600CTS	MIN 4 LAPPED SPANS

NOTES:

1. PURLINS/GIRTS TO BE LAPPED WHERE SHOWN. LAP LENGTH TO BE AS PER MANUFACTURER'S RECOMMENDATIONS (MIN 15% OF SPAN).
2. PURLINS/GIRTS TO BE PROVIDED WITH MIN 1 MIDSPAN BRIDGING FOR ALL SPANS ABOVE 4m (U.N.O).
3. PROVIDE GIRT HANGERS/SAG RODS/BRIDGING TO MANUFACTURERS DETAILS

USE OF THESE DRAWINGS

1. THIS DRAWING SHALL BE READ IN CONJUNCTION WITH THE DISCIPLINE CONTRACT SPECIFICATION AND OTHER PROJECT DOCUMENTS.
2. DRAWINGS AND DESIGNS UNDERTAKEN BY A SHOP DETAILER SHALL BE PRESENTED TO THE PTA FOR REVIEW AND CONCURRENCE THAT THE DESIGN INTENT HAS BEEN ACHIEVED.
3. THE CONTRACTORS SHALL BE FULLY AWARE OF THE OTHER INTERFACING PACKAGES AND SHALL HAVE DEEMED TO HAVE INCLUDED INTER-TRADE INTERFACES. THE INTERFACES IDENTIFIED IN THE DOCUMENTATION ARE TO INDICATE AN INTENT AND ARE NOT INTENDED TO BE EXHAUSTIVE. MAKE ALLOWANCES AS REQUIRED.

ISSUED FOR CONSTRUCTION

REV	DATE	AMENDMENT	DSN	DRN	CHKD	APP
0	01.10.19	ISSUED FOR CONSTRUCTION	J.S.	A.C.D.	M.P.	G.B.

ORIG SIZE A1

0 1 2 3 4 5 10m

SCALE 1:100 AT A1

This document must not be copied without PTA's written permission, and the contents thereof must not be imparted to a third party nor be used for any unauthorised purpose.

aurecon

www.aurecongroup.com

505695-0000-DRG-ST-1635

REFERENCES

SCALE : As indicated (@ A1)

DATUM : HORIZONTAL: PCG94 VERTICAL: AHD71

PTA ACCEPTANCE STAMP

DESIGNED J.SPANO

DRAWN A.DAWSON

CHECKED M.PEARCE

APPROVED FOR ISSUE

G.BENTLEY

DATE

Government of Western Australia Public Transport Authority

DETAILED DESIGN FOR THE BELLEVUE DEPOT

HV TESTING FACILITY

STRUCTURAL

NORTH ELEVATION - ZONE 02

PTA Drawing No: 12-A-152-ST0252 REV : 0

Plot Date: 10/1/2019 9:25:51 AM Office: Filename: BIM 360://505695 - Bellevue Depot/505695-ST-BELLEVUE DEPOT-02B.rvt

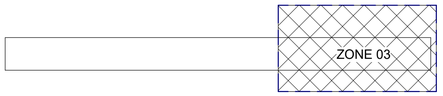

ZONE PLAN

NOTES:

1. DO NO SCALE DRAWINGS. WRITTEN DIMENSIONS GOVERN.
2. ALL DIMENSIONS ARE IN MILLIMETRES UNLESS NOTED OTHERWISE
3. ALL DIMENSIONS SHALL BE VERIFIED ON SITE BEFORE PROCEEDING WITH THE WORK. RELEVANT PARTY SHALL BE NOTIFIED IN WRITING OF ANY DISCREPANCIES.
4. THIS DRAWING MUST BE READ IN CONJUNCTION WITH ALL RELEVANT CONTRACTS, SPECIFICATIONS, REPORTS AND DRAWINGS.

NOTES:

1. REFER TO ARCHITECTS DRAWINGS FOR DIMENSIONS AND LEVELS
2. REFER TO 12-A-152-ST0022 TO ST0031 FOR STANDARD CONNECTIONS DETAILS
3. REFER TO 12-A-152-ST0003 & ST0004 FOR STANDARD NOTES
4. REFER TO THE STRUCTURAL SPECIFICATION FOR H.D. GALVANISING REQUIREMENTS
5. CONTRACTOR TO NOTE THAT THE MAIN WAREHOUSE FRAME ROOF BRACING ARE DESIGNED TO FUNCTION IN THE PERMANENT WORKS CASE AS TENSION ONLY BRACES AND TO MAKE DUE ALLOWANCE WHEN CONSIDERING TEMPORARY WORKS REQUIREMENTS FOR SAFE ERECTION
6. BRIDGING REQUIREMENTS AS NOTED ON PLANS, REFER TO MANUFACTURES' SPECIFICATIONS.
7. GIRTS AND PURLINS TO BE PROVIDED WITH A MINIMUM ZINC COATING CLASS OF Z450
8. PROVIDE A 50X50X3 COLD FORMED ANGLE TRIMMER BETWEEN ALL PURLINS AT ROOF HIP, VALLEY AND PENETRATION LOCATIONS TO SUPPORT CUT EDGES OF ROOF SHEETING
9. REFER TO SERVICES SUBCONTRACTOR DETAILS FOR SECONDARY STEELWORK TO SUPPORT SERVICES EQUIPMENT AND FOR ISOLATION DETAILS
10. PROVIDE EDGE PROTECTION TO ARCHITECTS DETAILS
11. ALL DIMENSIONS TO PRECAST PANELS ARE NOMINAL ONLY AND SHOULD BE REFERENCED WITH THE ARCHITECTS DRAWINGS. THESE SHALL BE CONFIRMED WITH THE PRECAST CONTRACTOR
12. REFER TO THE ARCHITECTS DRAWINGS FOR REBATES, CHAMFERS, DRIPS, SEALS, BAFFLES, ETC. AND EXTENT OF FINISHES
13. DOWEL TUBE SPACING ON PRECAST SHOP DRAWINGS SHALL INCORPORATE THE SURVEYED AS BUILT SETOUT OF DOWELS
14. IT IS THE CONTRACTORS RESPONSIBILITY TO CO-ORDINATE ALL PENETRATIONS FOR SERVICES ETC. ALL PENETRATIONS SHALL BE SHOWN ON SHOP DRAWINGS FOR APPROVAL PRIOR TO FABRICATION OF ANY PANEL
15. REFER TO THE ARCHITECTS DRAWINGS FOR ALL JOINTING DETAILS

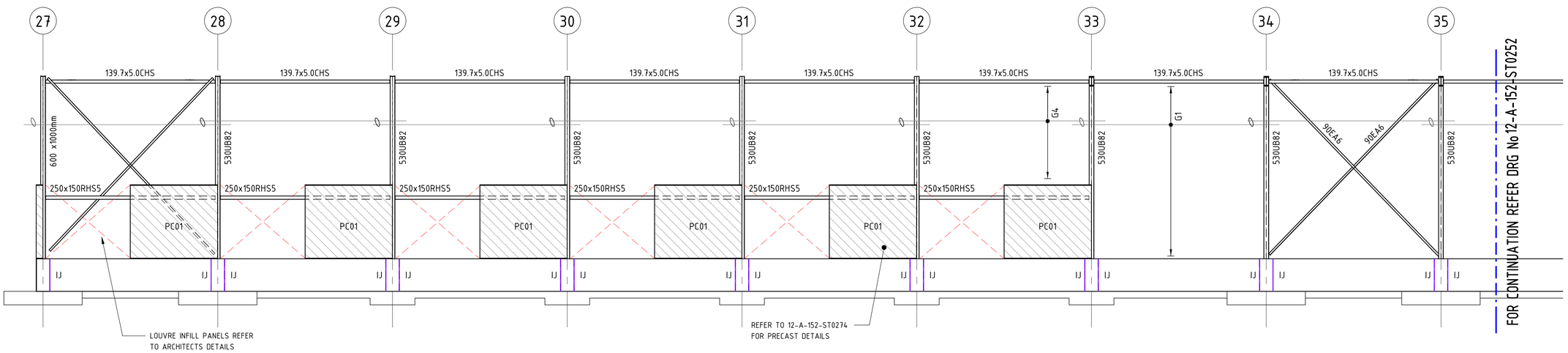

GIRT SCHEDULE

TAG	MEMBER	COMMENTS
G1	Z20024 AT 1200 CTS	1 ROW OF BRIDGING (MIN 4 LAPPED SPANS)
G2	Z20019 AT 1200CTS	(SINGLE SPAN)
G3	Z20019 AT 600CTS	(SINGLE SPAN)
G4	Z20019 AT 600CTS	MIN 4 LAPPED SPANS

NOTES:

1. PURLINS/GIRTS TO BE LAPPED WHERE SHOWN. LAP LENGTH TO BE AS PER MANUFACTURER'S RECOMMENDATIONS (MIN 15% OF SPAN).
2. PURLINS/GIRTS TO BE PROVIDED WITH MIN 1 MIDSPAN BRIDGING FOR ALL SPANS ABOVE 4m (U.N.O).
3. PROVIDE GIRT HANGERS/SAG RODS/BRIDGING TO MANUFACTURERS DETAILS

NORTH ELEVATION (ZONE 3)

1 : 100

USE OF THESE DRAWINGS

1. THIS DRAWING SHALL BE READ IN CONJUNCTION WITH THE DISCIPLINE CONTRACT SPECIFICATION AND OTHER PROJECT DOCUMENTS.
2. DRAWINGS AND DESIGNS UNDERTAKEN BY A SHOP DETAILER SHALL BE PRESENTED TO THE PTA FOR REVIEW AND CONCURRENCE THAT THE DESIGN INTENT HAS BEEN ACHIEVED.
3. THE CONTRACTORS SHALL BE FULLY AWARE OF THE OTHER INTERFACING PACKAGES AND SHALL HAVE DEEMED TO HAVE INCLUDED INTER-TRADE INTERFACES. THE INTERFACES IDENTIFIED IN THE DOCUMENTATION ARE TO INDICATE AN INTENT AND ARE NOT INTENDED TO BE EXHAUSTIVE. MAKE ALLOWANCES AS REQUIRED.

ISSUED FOR CONSTRUCTION

REV	DATE	AMENDMENT	DSN	DRN	CHKD	APP
0	01.10.19	ISSUED FOR CONSTRUCTION	J.S.	A.C.D.	M.P.	G.B.

ORIG SIZE A1

0 1 2 3 4 5 10m
SCALE 1:100 AT A1

This document must not be copied without PTA's written permission, and the contents thereof must not be imparted to a third party nor be used for any unauthorised purpose.

aurecon
www.aurecongroup.com

505695-0000-DRG-ST-1636

REFERENCES

SCALE : As indicated (@ A1)
DATUM :
HORIZONTAL: PCG94
VERTICAL: AHD71

PTA ACCEPTANCE STAMP

DESIGNED J.SPANO
DRAWN A.DAWSON
CHECKED M.PEARCE
APPROVED FOR ISSUE
G.BENTLEY
DATE

Government of Western Australia Public Transport Authority

DETAILED DESIGN FOR THE BELLEVUE DEPOT

HV TESTING FACILITY
STRUCTURAL
NORTH ELEVATION - ZONE 03

PTA Drawing No: 12-A-152-ST0253 REV : 0

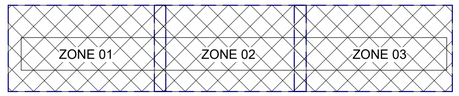

ZONE PLAN

NOTES:

1. DO NO SCALE DRAWINGS. WRITTEN DIMENSIONS GOVERN.
2. ALL DIMENSIONS ARE IN MILLIMETRES UNLESS NOTED OTHERWISE
3. ALL DIMENSIONS SHALL BE VERIFIED ON SITE BEFORE PROCEEDING WITH THE WORK. RELEVANT PARTY SHALL BE NOTIFIED IN WRITING OF ANY DISCREPANCIES.
4. THIS DRAWING MUST BE READ IN CONJUNCTION WITH ALL RELEVANT CONTRACTS, SPECIFICATIONS, REPORTS AND DRAWINGS.

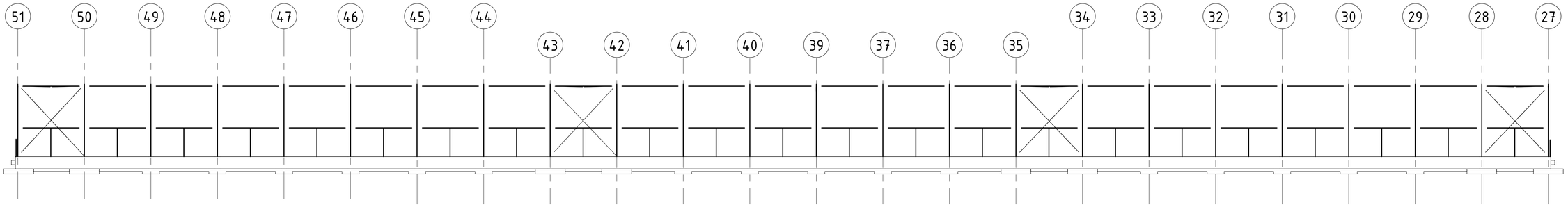

SOUTH ELEVATION

1 : 250

USE OF THESE DRAWINGS

1. THIS DRAWING SHALL BE READ IN CONJUNCTION WITH THE DISCIPLINE CONTRACT SPECIFICATION AND OTHER PROJECT DOCUMENTS.
2. DRAWINGS AND DESIGNS UNDERTAKEN BY A SHOP DETAILER SHALL BE PRESENTED TO THE PTA FOR REVIEW AND CONCURRENCE THAT THE DESIGN INTENT HAS BEEN ACHIEVED.
3. THE CONTRACTORS SHALL BE FULLY AWARE OF THE OTHER INTERFACING PACKAGES AND SHALL HAVE DEEMED TO HAVE INCLUDED INTER-TRADE INTERFACES. THE INTERFACES IDENTIFIED IN THE DOCUMENTATION ARE TO INDICATE AN INTENT AND ARE NOT INTENDED TO BE EXHAUSTIVE. MAKE ALLOWANCES AS REQUIRED.

ISSUED FOR CONSTRUCTION

REV	DATE	AMENDMENT	DSN	DRN	CHKD	APP
0	01.10.19	ISSUED FOR CONSTRUCTION	J.S.	A.C.D.	M.P.	G.B.

ORIG SIZE A1

This document must not be copied without PTA's written permission, and the contents thereof must not be imparted to a third party nor be used for any unauthorised purpose.

aurecon
www.aurecongroup.com

505695-0000-DRG-ST-1637

REFERENCES

SCALE : As indicated (@ A1)
DATUM : HORIZONTAL: PCG94 VERTICAL: AHD71
PTA ACCEPTANCE STAMP

DESIGNED J.SPANO
DRAWN A.DAWSON
CHECKED M.PEARCE
APPROVED FOR ISSUE G.BENTLEY
DATE

Government of Western Australia Public Transport Authority

DETAILED DESIGN FOR THE BELLEVUE DEPOT

HV TESTING FACILITY
STRUCTURAL
SOUTH ELEVATION

PTA Drawing No: 12-A-152-ST0254 REV : 0

Plot Date: 10/1/2019 9:25:55 AM Office: PERTH Filename: BIM 360://505695 - Bellevue Depot/505695-ST-BELLEVUE DEPOT-02B.rvt

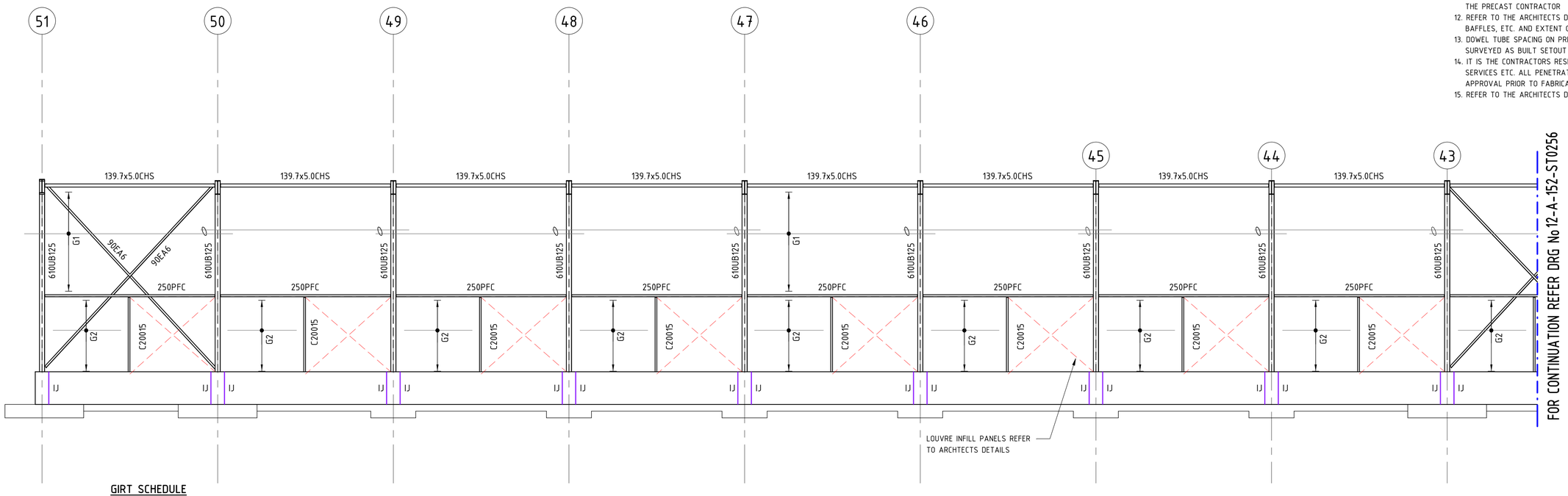

SOUTH ELEVATION (ZONE 1)

1 : 100

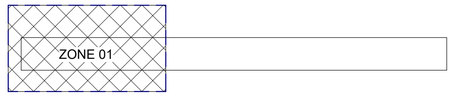

ZONE PLAN

NOTES:

1. DO NO SCALE DRAWINGS. WRITTEN DIMENSIONS GOVERN.
2. ALL DIMENSIONS ARE IN MILLIMETRES UNLESS NOTED OTHERWISE
3. ALL DIMENSIONS SHALL BE VERIFIED ON SITE BEFORE PROCEEDING WITH THE WORK. RELEVANT PARTY SHALL BE NOTIFIED IN WRITING OF ANY DISCREPANCIES.
4. THIS DRAWING MUST BE READ IN CONJUNCTION WITH ALL RELEVANT CONTRACTS, SPECIFICATIONS, REPORTS AND DRAWINGS.

NOTES:

1. REFER TO ARCHITECTS DRAWINGS FOR DIMENSIONS AND LEVELS
2. REFER TO 12-A-152-ST0022 TO ST0031 FOR STANDARD CONNECTIONS DETAILS
3. REFER TO 12-A-152-ST0003 & ST0004 FOR STANDARD NOTES
4. REFER TO THE STRUCTURAL SPECIFICATION FOR H.D. GALVANISING REQUIREMENTS
5. CONTRACTOR TO NOTE THAT THE MAIN WAREHOUSE FRAME ROOF BRACING ARE DESIGNED TO FUNCTION IN THE PERMANENT WORKS CASE AS TENSION ONLY BRACES AND TO MAKE DUE ALLOWANCE WHEN CONSIDERING TEMPORARY WORKS REQUIREMENTS FOR SAFE ERECTION
6. BRIDGING REQUIREMENTS AS NOTED ON PLANS, REFER TO MANUFACTURES' SPECIFICATIONS.
7. GIRTS AND PURLINS TO BE PROVIDED WITH A MINIMUM ZINC COATING CLASS OF Z450
8. PROVIDE A 50X50X3 COLD FORMED ANGLE TRIMMER BETWEEN ALL PURLINS AT ROOF HIP, VALLEY AND PENETRATION LOCATIONS TO SUPPORT CUT EDGES OF ROOF SHEETING
9. REFER TO SERVICES SUBCONTRACTOR DETAILS FOR SECONDARY STEELWORK TO SUPPORT SERVICES EQUIPMENT AND FOR ISOLATION DETAILS
10. PROVIDE EDGE PROTECTION TO ARCHITECTS DETAILS
11. ALL DIMENSIONS TO PRECAST PANELS ARE NOMINAL ONLY AND SHOULD BE REFERENCED WITH THE ARCHITECTS DRAWINGS. THESE SHALL BE CONFIRMED WITH THE PRECAST CONTRACTOR
12. REFER TO THE ARCHITECTS DRAWINGS FOR REBATES, CHAMFERS, DRIPS, SEALS, BAFFLES, ETC. AND EXTENT OF FINISHES
13. DOWEL TUBE SPACING ON PRECAST SHOP DRAWINGS SHALL INCORPORATE THE SURVEYED AS BUILT SETOUT OF DOWELS
14. IT IS THE CONTRACTORS RESPONSIBILITY TO CO-ORDINATE ALL PENETRATIONS FOR SERVICES ETC. ALL PENETRATIONS SHALL BE SHOWN ON SHOP DRAWINGS FOR APPROVAL PRIOR TO FABRICATION OF ANY PANEL
15. REFER TO THE ARCHITECTS DRAWINGS FOR ALL JOINTING DETAILS

GIRT SCHEDULE

TAG	MEMBER	COMMENTS
G1	Z20024 AT 1200 CTS	1 ROW OF BRIDGING (MIN 4 LAPPED SPANS)
G2	Z20019 AT 1200CTS	(SINGLE SPAN)
G3	Z20019 AT 600CTS	(SINGLE SPAN)
G4	Z20019 AT 600CTS	MIN 4 LAPPED SPANS

NOTES:

1. PURLINS/GIRTS TO BE LAPPED WHERE SHOWN. LAP LENGTH TO BE AS PER MANUFACTURER'S RECOMMENDATIONS (MIN 15% OF SPAN).
2. PURLINS/GIRTS TO BE PROVIDED WITH MIN 1 MIDSPAN BRIDGING FOR ALL SPANS ABOVE 4m (U.N.O).
3. PROVIDE GIRT HANGERS/SAG RODS/BRIDGING TO MANUFACTURERS DETAILS

USE OF THESE DRAWINGS

1. THIS DRAWING SHALL BE READ IN CONJUNCTION WITH THE DISCIPLINE CONTRACT SPECIFICATION AND OTHER PROJECT DOCUMENTS.
2. DRAWINGS AND DESIGNS UNDERTAKEN BY A SHOP DETAILER SHALL BE PRESENTED TO THE PTA FOR REVIEW AND CONCURRENCE THAT THE DESIGN INTENT HAS BEEN ACHIEVED.
3. THE CONTRACTORS SHALL BE FULLY AWARE OF THE OTHER INTERFACING PACKAGES AND SHALL HAVE DEEMED TO HAVE INCLUDED INTER-TRADE INTERFACES. THE INTERFACES IDENTIFIED IN THE DOCUMENTATION ARE TO INDICATE AN INTENT AND ARE NOT INTENDED TO BE EXHAUSTIVE. MAKE ALLOWANCES AS REQUIRED.

ISSUED FOR CONSTRUCTION

REV	DATE	AMENDMENT	DSN	DRN	CHKD	APP
0	01.10.19	ISSUED FOR CONSTRUCTION	J.S.	A.C.D.	M.P.	G.B.

ORIG SIZE A1

0 1 2 3 4 5 10m

SCALE 1:100 AT A1

This document must not be copied without PTA's written permission, and the contents thereof must not be imparted to a third party nor be used for any unauthorised purpose.

aurecon

www.aurecongroup.com

505695-0000-DRG-ST-1638

REFERENCES

SCALE : As indicated (@ A1)

DATUM : HORIZONTAL: PCG94 VERTICAL: AHD71

PTA ACCEPTANCE STAMP

DESIGNED J.SPANO

DRAWN A.DAWSON

CHECKED M.PEARCE

APPROVED FOR ISSUE

G.BENTLEY

DATE

Government of Western Australia Public Transport Authority

DETAILED DESIGN FOR THE BELLEVUE DEPOT

HV TESTING FACILITY

STRUCTURAL

SOUTH ELEVATION - ZONE 01

PTA Drawing No: 12-A-152-ST0255 REV : 0

Plot Date: 10/1/2019 9:25:57 AM Office: Filename: BIM 360://505695 - Bellevue Depot/505695-ST-BELLEVUE DEPOT-02B.rvt

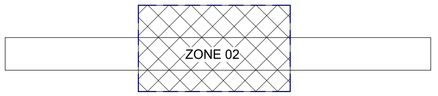

ZONE PLAN

NOTES:

1. DO NO SCALE DRAWINGS. WRITTEN DIMENSIONS GOVERN.
2. ALL DIMENSIONS ARE IN MILLIMETRES UNLESS NOTED OTHERWISE
3. ALL DIMENSIONS SHALL BE VERIFIED ON SITE BEFORE PROCEEDING WITH THE WORK. RELEVANT PARTY SHALL BE NOTIFIED IN WRITING OF ANY DISCREPANCIES.
4. THIS DRAWING MUST BE READ IN CONJUNCTION WITH ALL RELEVANT CONTRACTS, SPECIFICATIONS, REPORTS AND DRAWINGS.

NOTES:

1. REFER TO ARCHITECTS DRAWINGS FOR DIMENSIONS AND LEVELS
2. REFER TO 12-A-152-ST0022 TO ST0031 FOR STANDARD CONNECTIONS DETAILS
3. REFER TO 12-A-152-ST0003 & ST0004 FOR STANDARD NOTES
4. REFER TO THE STRUCTURAL SPECIFICATION FOR H.D. GALVANISING REQUIREMENTS
5. CONTRACTOR TO NOTE THAT THE MAIN WAREHOUSE FRAME ROOF BRACING ARE DESIGNED TO FUNCTION IN THE PERMANENT WORKS CASE AS TENSION ONLY BRACES AND TO MAKE DUE ALLOWANCE WHEN CONSIDERING TEMPORARY WORKS REQUIREMENTS FOR SAFE ERECTION
6. BRIDGING REQUIREMENTS AS NOTED ON PLANS, REFER TO MANUFACTURES' SPECIFICATIONS.
7. GIRTS AND PURLINS TO BE PROVIDED WITH A MINIMUM ZINC COATING CLASS OF Z450
8. PROVIDE A 50X50X3 COLD FORMED ANGLE TRIMMER BETWEEN ALL PURLINS AT ROOF HIP, VALLEY AND PENETRATION LOCATIONS TO SUPPORT CUT EDGES OF ROOF SHEETING
9. REFER TO SERVICES SUBCONTRACTOR DETAILS FOR SECONDARY STEELWORK TO SUPPORT SERVICES EQUIPMENT AND FOR ISOLATION DETAILS
10. PROVIDE EDGE PROTECTION TO ARCHITECTS DETAILS
11. ALL DIMENSIONS TO PRECAST PANELS ARE NOMINAL ONLY AND SHOULD BE REFERENCED WITH THE ARCHITECTS DRAWINGS. THESE SHALL BE CONFIRMED WITH THE PRECAST CONTRACTOR
12. REFER TO THE ARCHITECTS DRAWINGS FOR REBATES, CHAMFERS, DRIPS, SEALS, BAFFLES, ETC. AND EXTENT OF FINISHES
13. DOWEL TUBE SPACING ON PRECAST SHOP DRAWINGS SHALL INCORPORATE THE SURVEYED AS BUILT SETOUT OF DOWELS
14. IT IS THE CONTRACTORS RESPONSIBILITY TO CO-ORDINATE ALL PENETRATIONS FOR SERVICES ETC. ALL PENETRATIONS SHALL BE SHOWN ON SHOP DRAWINGS FOR APPROVAL PRIOR TO FABRICATION OF ANY PANEL
15. REFER TO THE ARCHITECTS DRAWINGS FOR ALL JOINTING DETAILS

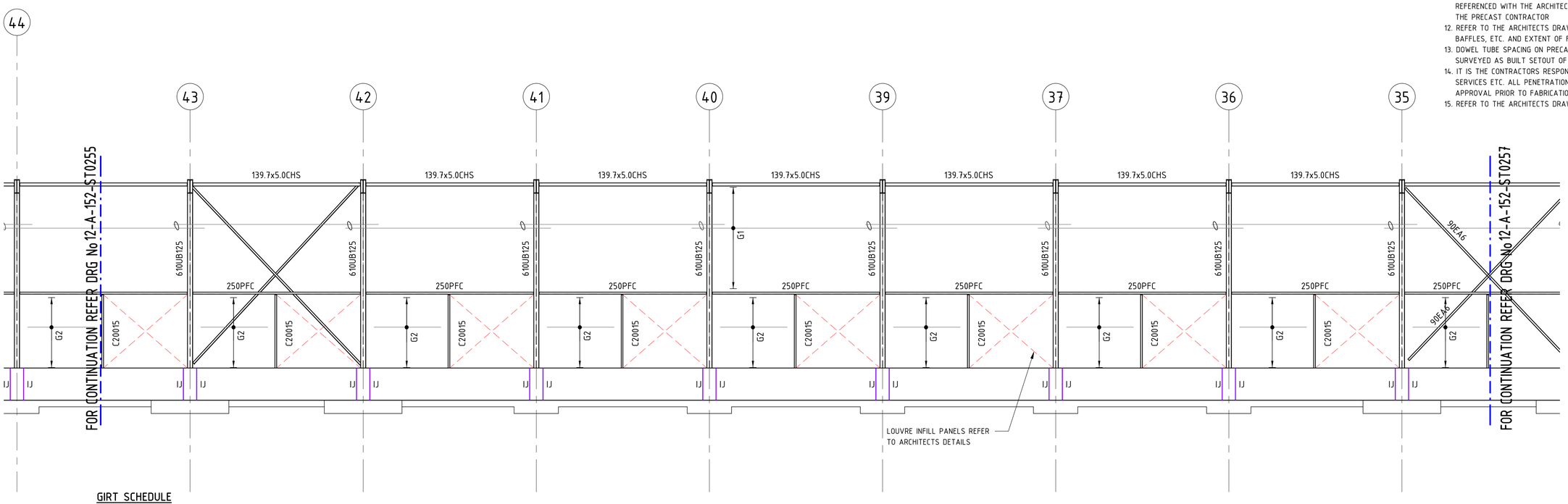

SOUTH ELEVATION (ZONE 2)

1 : 100

GIRT SCHEDULE

TAG	MEMBER	COMMENTS
G1	Z20024 AT 1200 CTS	1 ROW OF BRIDGING (MIN 4 LAPPED SPANS)
G2	Z20019 AT 1200CTS	(SINGLE SPAN)
G3	Z20019 AT 600CTS	(SINGLE SPAN)
G4	Z20019 AT 600CTS	MIN 4 LAPPED SPANS

NOTES:

1. PURLINS/GIRTS TO BE LAPPED WHERE SHOWN. LAP LENGTH TO BE AS PER MANUFACTURER'S RECOMMENDATIONS (MIN 15% OF SPAN).
2. PURLINS/GIRTS TO BE PROVIDED WITH MIN 1 MIDSPAN BRIDGING FOR ALL SPANS ABOVE 4m (U.N.O).
3. PROVIDE GIRT HANGERS/SAG RODS/BRIDGING TO MANUFACTURERS DETAILS

USE OF THESE DRAWINGS

1. THIS DRAWING SHALL BE READ IN CONJUNCTION WITH THE DISCIPLINE CONTRACT SPECIFICATION AND OTHER PROJECT DOCUMENTS.
2. DRAWINGS AND DESIGNS UNDERTAKEN BY A SHOP DETAILER SHALL BE PRESENTED TO THE PTA FOR REVIEW AND CONCURRENCE THAT THE DESIGN INTENT HAS BEEN ACHIEVED.
3. THE CONTRACTORS SHALL BE FULLY AWARE OF THE OTHER INTERFACING PACKAGES AND SHALL HAVE DEEMED TO HAVE INCLUDED INTER-TRADE INTERFACES. THE INTERFACES IDENTIFIED IN THE DOCUMENTATION ARE TO INDICATE AN INTENT AND ARE NOT INTENDED TO BE EXHAUSTIVE. MAKE ALLOWANCES AS REQUIRED.

ISSUED FOR CONSTRUCTION

REV	DATE	AMENDMENT	DSN	DRN	CHKD	APP
0	01.10.19	ISSUED FOR CONSTRUCTION	J.S.	A.C.D.	M.P.	G.B.

ORIG SIZE A1

0 1 2 3 4 5 10m
SCALE 1:100 AT A1

This document must not be copied without PTA's written permission, and the contents thereof must not be imparted to a third party nor be used for any unauthorised purpose.

aurecon
www.aurecongroup.com

505695-0000-DRG-ST-1639

REFERENCES

SCALE : As indicated (@ A1)
DATUM : HORIZONTAL: PCG94 VERTICAL: AHD71
PTA ACCEPTANCE STAMP

DESIGNED J.SPANO
DRAWN A.DAWSON
CHECKED M.PEARCE
APPROVED FOR ISSUE
G.BENTLEY
DATE

Government of Western Australia Public Transport Authority

DETAILED DESIGN FOR THE BELLEVUE DEPOT

HV TESTING FACILITY
STRUCTURAL
SOUTH ELEVATION - ZONE 02

PTA Drawing No: 12-A-152-ST0256 REV : 0

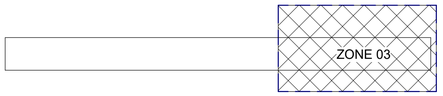

ZONE PLAN

NOTES:

1. DO NO SCALE DRAWINGS. WRITTEN DIMENSIONS GOVERN.
2. ALL DIMENSIONS ARE IN MILLIMETRES UNLESS NOTED OTHERWISE
3. ALL DIMENSIONS SHALL BE VERIFIED ON SITE BEFORE PROCEEDING WITH THE WORK. RELEVANT PARTY SHALL BE NOTIFIED IN WRITING OF ANY DISCREPANCIES.
4. THIS DRAWING MUST BE READ IN CONJUNCTION WITH ALL RELEVANT CONTRACTS, SPECIFICATIONS, REPORTS AND DRAWINGS.

NOTES:

1. REFER TO ARCHITECTS DRAWINGS FOR DIMENSIONS AND LEVELS
2. REFER TO 12-A-152-ST0022 TO ST0031 FOR STANDARD CONNECTIONS DETAILS
3. REFER TO 12-A-152-ST0003 & ST0004 FOR STANDARD NOTES
4. REFER TO THE STRUCTURAL SPECIFICATION FOR H.D. GALVANISING REQUIREMENTS
5. CONTRACTOR TO NOTE THAT THE MAIN WAREHOUSE FRAME ROOF BRACING ARE DESIGNED TO FUNCTION IN THE PERMANENT WORKS CASE AS TENSION ONLY BRACES AND TO MAKE DUE ALLOWANCE WHEN CONSIDERING TEMPORARY WORKS REQUIREMENTS FOR SAFE ERECTION
6. BRIDGING REQUIREMENTS AS NOTED ON PLANS, REFER TO MANUFACTURES' SPECIFICATIONS.
7. GIRTS AND PURLINS TO BE PROVIDED WITH A MINIMUM ZINC COATING CLASS OF Z450
8. PROVIDE A 50X50X3 COLD FORMED ANGLE TRIMMER BETWEEN ALL PURLINS AT ROOF HIP, VALLEY AND PENETRATION LOCATIONS TO SUPPORT CUT EDGES OF ROOF SHEETING
9. REFER TO SERVICES SUBCONTRACTOR DETAILS FOR SECONDARY STEELWORK TO SUPPORT SERVICES EQUIPMENT AND FOR ISOLATION DETAILS
10. PROVIDE EDGE PROTECTION TO ARCHITECTS DETAILS
11. ALL DIMENSIONS TO PRECAST PANELS ARE NOMINAL ONLY AND SHOULD BE REFERENCED WITH THE ARCHITECTS DRAWINGS. THESE SHALL BE CONFIRMED WITH THE PRECAST CONTRACTOR
12. REFER TO THE ARCHITECTS DRAWINGS FOR REBATES, CHAMFERS, DRIPS, SEALS, BAFFLES, ETC. AND EXTENT OF FINISHES
13. DOWEL TUBE SPACING ON PRECAST SHOP DRAWINGS SHALL INCORPORATE THE SURVEYED AS BUILT SETOUT OF DOWELS
14. IT IS THE CONTRACTORS RESPONSIBILITY TO CO-ORDINATE ALL PENETRATIONS FOR SERVICES ETC. ALL PENETRATIONS SHALL BE SHOWN ON SHOP DRAWINGS FOR APPROVAL PRIOR TO FABRICATION OF ANY PANEL
15. REFER TO THE ARCHITECTS DRAWINGS FOR ALL JOINTING DETAILS

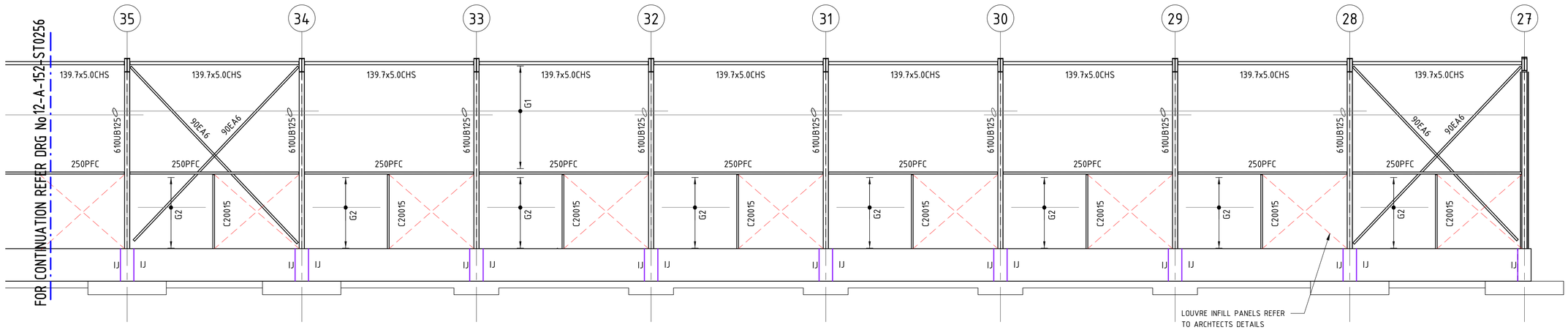

SOUTH ELEVATION (ZONE 3)

1 : 100

GIRT SCHEDULE

TAG	MEMBER	COMMENTS
G1	Z20024 AT 1200 CTS	1 ROW OF BRIDGING (MIN 4 LAPPED SPANS)
G2	Z20019 AT 1200CTS	(SINGLE SPAN)
G3	Z20019 AT 600CTS	(SINGLE SPAN)
G4	Z20019 AT 600CTS	MIN 4 LAPPED SPANS

NOTES:

1. PURLINS/GIRTS TO BE LAPPED WHERE SHOWN. LAP LENGTH TO BE AS PER MANUFACTURER'S RECOMMENDATIONS (MIN 15% OF SPAN).
2. PURLINS/GIRTS TO BE PROVIDED WITH MIN 1 MIDSPAN BRIDGING FOR ALL SPANS ABOVE 4m (U.N.O).
3. PROVIDE GIRT HANGERS/SAG RODS/BRIDGING TO MANUFACTURERS DETAILS

USE OF THESE DRAWINGS

1. THIS DRAWING SHALL BE READ IN CONJUNCTION WITH THE DISCIPLINE CONTRACT SPECIFICATION AND OTHER PROJECT DOCUMENTS.
2. DRAWINGS AND DESIGNS UNDERTAKEN BY A SHOP DETAILER SHALL BE PRESENTED TO THE PTA FOR REVIEW AND CONCURRENCE THAT THE DESIGN INTENT HAS BEEN ACHIEVED.
3. THE CONTRACTORS SHALL BE FULLY AWARE OF THE OTHER INTERFACING PACKAGES AND SHALL HAVE DEEMED TO HAVE INCLUDED INTER-TRADE INTERFACES. THE INTERFACES IDENTIFIED IN THE DOCUMENTATION ARE TO INDICATE AN INTENT AND ARE NOT INTENDED TO BE EXHAUSTIVE. MAKE ALLOWANCES AS REQUIRED.

ISSUED FOR CONSTRUCTION

REV	DATE	AMENDMENT	DSN	DRN	CHKD	APP
0	01.10.19	ISSUED FOR CONSTRUCTION	J.S.	A.C.D.	M.P.	G.B.

ORIG SIZE A1

0 1 2 3 4 5 10m
SCALE 1:100 AT A1

This document must not be copied without PTA's written permission, and the contents thereof must not be imparted to a third party nor be used for any unauthorised purpose.

aurecon
www.aurecongroup.com

505695-0000-DRG-ST-1640

REFERENCES

SCALE : As indicated (@ A1)
DATUM : HORIZONTAL: PCG94 VERTICAL: AHD71
PTA ACCEPTANCE STAMP

DESIGNED J.SPANO
DRAWN A.DAWSON
CHECKED M.PEARCE
APPROVED FOR ISSUE
G.BENTLEY
DATE

Government of Western Australia Public Transport Authority

DETAILED DESIGN FOR THE BELLEVUE DEPOT

HV TESTING FACILITY
STRUCTURAL
SOUTH ELEVATION - ZONE 03

PTA Drawing No: 12-A-152-ST0257 REV : 0

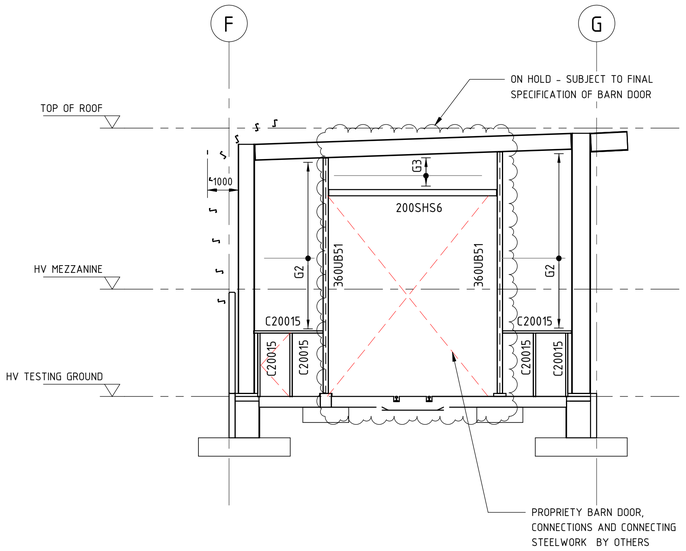

WEST ELEVATION
1 : 100

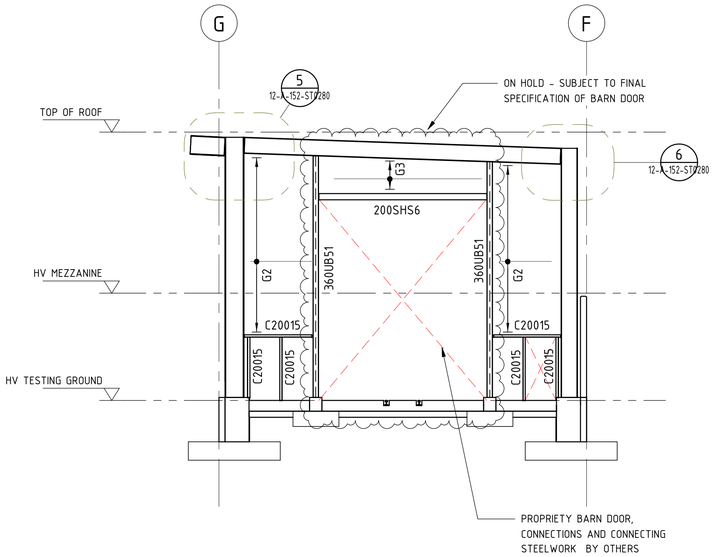

EAST ELEVATION
1 : 100

ZONE PLAN

NOTES:

1. DO NO SCALE DRAWINGS. WRITTEN DIMENSIONS GOVERN.
2. ALL DIMENSIONS ARE IN MILLIMETRES UNLESS NOTED OTHERWISE
3. ALL DIMENSIONS SHALL BE VERIFIED ON SITE BEFORE PROCEEDING WITH THE WORK. RELEVANT PARTY SHALL BE NOTIFIED IN WRITING OF ANY DISCREPANCIES.
4. THIS DRAWING MUST BE READ IN CONJUNCTION WITH ALL RELEVANT CONTRACTS, SPECIFICATIONS, REPORTS AND DRAWINGS.

GIRT SCHEDULE

TAG	MEMBER	COMMENTS
G1	Z20024 AT 1200 CTS	1 ROW OF BRIDGING (MIN 4 LAPPED SPANS)
G2	Z20019 AT 1200CTS	(SINGLE SPAN)
G3	Z20019 AT 600CTS	(SINGLE SPAN)
G4	Z20019 AT 600CTS	MIN 4 LAPPED SPANS

NOTES:

1. PURLINS/GIRTS TO BE LAPPED WHERE SHOWN. LAP LENGTH TO BE AS PER MANUFACTURER'S RECOMMENDATIONS (MIN 15% OF SPAN).
2. PURLINS/GIRTS TO BE PROVIDED WITH MIN 1 MIDSPAN BRIDGING FOR ALL SPANS ABOVE 4m (U.N.O).
3. PROVIDE GIRT HANGERS/SAG RODS/BRIDGING TO MANUFACTURERS DETAILS

USE OF THESE DRAWINGS

1. THIS DRAWING SHALL BE READ IN CONJUNCTION WITH THE DISCIPLINE CONTRACT SPECIFICATION AND OTHER PROJECT DOCUMENTS.
2. DRAWINGS AND DESIGNS UNDERTAKEN BY A SHOP DETAILER SHALL BE PRESENTED TO THE PTA FOR REVIEW AND CONCURRENCE THAT THE DESIGN INTENT HAS BEEN ACHIEVED.
3. THE CONTRACTORS SHALL BE FULLY AWARE OF THE OTHER INTERFACING PACKAGES AND SHALL HAVE DEEMED TO HAVE INCLUDED INTER-TRADE INTERFACES. THE INTERFACES IDENTIFIED IN THE DOCUMENTATION ARE TO INDICATE AN INTENT AND ARE NOT INTENDED TO BE EXHAUSTIVE. MAKE ALLOWANCES AS REQUIRED.

ISSUED FOR CONSTRUCTION

REV	DATE	AMENDMENT	DSN	DRN	CHKD	APP
0	01.10.19	ISSUED FOR CONSTRUCTION	J.S.	A.C.D.	M.P.	G.B.

ORIG SIZE A1

0 1 2 3 4 5 10m
SCALE 1:100 AT A1

This document must not be copied without PTA's written permission, and the contents thereof must not be imparted to a third party nor be used for any unauthorised purpose.

aurecon
www.aurecongroup.com

505695-0000-DRG-ST-1641

REFERENCES

SCALE : As indicated (@ A1)
DATUM : HORIZONTAL: PCG94 VERTICAL: AHD71
PTA ACCEPTANCE STAMP

DESIGNED J.SPANO
DRAWN A.DAWSON
CHECKED M.PEARCE
APPROVED FOR ISSUE
G.BENTLEY
DATE

Government of Western Australia Public Transport Authority
DETAILED DESIGN FOR THE BELLEVUE DEPOT

HV TESTING FACILITY
STRUCTURAL
WEST AND EAST ELEVATIONS

PTA Drawing No: 12-A-152-ST0258 REV : 0

Plot Date: 10/1/2019 9:26:02 AM Office: PERTH Filename: BIM 360://505695 - Bellevue Depot/505695-ST-BELLEVUE DEPOT-02B.rvt

ZONE PLAN

NOTES:

1. DO NO SCALE DRAWINGS. WRITTEN DIMENSIONS GOVERN.
2. ALL DIMENSIONS ARE IN MILLIMETRES UNLESS NOTED OTHERWISE
3. ALL DIMENSIONS SHALL BE VERIFIED ON SITE BEFORE PROCEEDING WITH THE WORK. RELEVANT PARTY SHALL BE NOTIFIED IN WRITING OF ANY DISCREPANCIES.
4. THIS DRAWING MUST BE READ IN CONJUNCTION WITH ALL RELEVANT CONTRACTS, SPECIFICATIONS, REPORTS AND DRAWINGS.

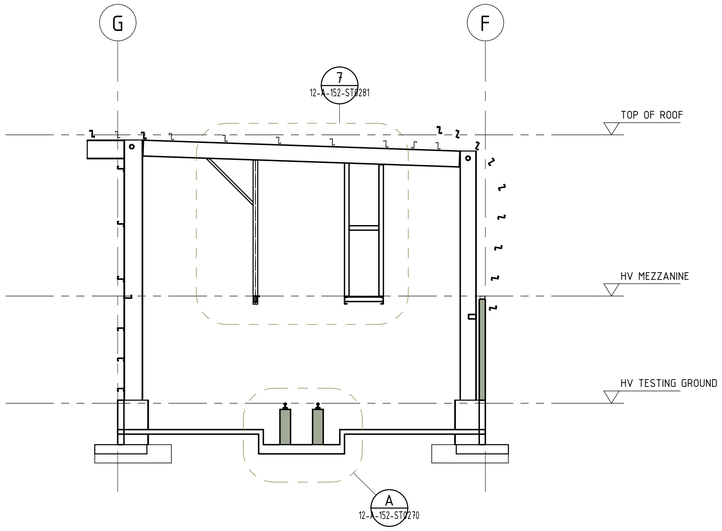

SECTION 1
1 : 100 12-A-152-ST0210

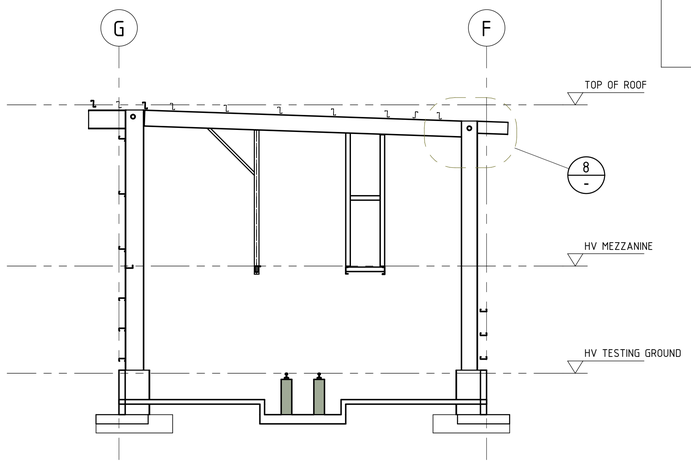

SECTION 2
1 : 100 12-A-152-ST0210

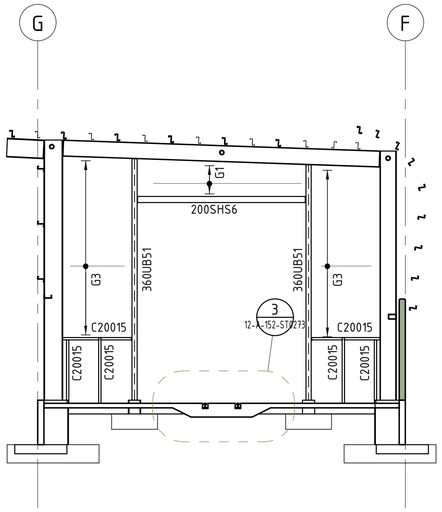

SECTION 3
1 : 100 12-A-152-ST0210

USE OF THESE DRAWINGS

1. THIS DRAWING SHALL BE READ IN CONJUNCTION WITH THE DISCIPLINE CONTRACT SPECIFICATION AND OTHER PROJECT DOCUMENTS.
2. DRAWINGS AND DESIGNS UNDERTAKEN BY A SHOP DETAILER SHALL BE PRESENTED TO THE PTA FOR REVIEW AND CONCURRENCE THAT THE DESIGN INTENT HAS BEEN ACHIEVED.
3. THE CONTRACTORS SHALL BE FULLY AWARE OF THE OTHER INTERFACING PACKAGES AND SHALL HAVE DEEMED TO HAVE INCLUDED INTER-TRADE INTERFACES. THE INTERFACES IDENTIFIED IN THE DOCUMENTATION ARE TO INDICATE AN INTENT AND ARE NOT INTENDED TO BE EXHAUSTIVE. MAKE ALLOWANCES AS REQUIRED.

ISSUED FOR CONSTRUCTION

REV	DATE	AMENDMENT	DSN	DRN	CHKD	APP
0	01.10.19	ISSUED FOR CONSTRUCTION	J.S.	A.C.D.	M.P.	G.B.

ORIG SIZE A1

0 1 2 3 4 5 10m
SCALE 1:100 AT A1

This document must not be copied without PTA's written permission, and the contents thereof must not be imparted to a third party nor be used for any unauthorised purpose.

aurecon
www.aurecongroup.com

505695-0000-DRG-ST-1710

REFERENCES

SCALE : As indicated (@ A1)
DATUM : HORIZONTAL: PCG94 VERTICAL: AHD71
PTA ACCEPTANCE STAMP

DESIGNED J.SPANO
DRAWN A.DAWSON
CHECKED M.PEARCE
APPROVED FOR ISSUE
G.BENTLEY
DATE

Government of Western Australia Public Transport Authority

DETAILED DESIGN FOR THE BELLEVUE DEPOT

HV TESTING FACILITY
STRUCTURAL
BUILDING SECTIONS - SHEET 1 OF 1

PTA Drawing No: 12-A-152-ST0260 REV : 0

Plot Date: 10/1/2019 9:26:04 AM Office: PERTH Filename: BIM 360://505695 - Bellevue Depot/505695-ST-BELLEVUE DEPOT-02B.rvt

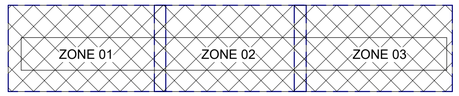

ZONE PLAN

NOTES:

1. DO NO SCALE DRAWINGS. WRITTEN DIMENSIONS GOVERN.
2. ALL DIMENSIONS ARE IN MILLIMETRES UNLESS NOTED OTHERWISE
3. ALL DIMENSIONS SHALL BE VERIFIED ON SITE BEFORE PROCEEDING WITH THE WORK. RELEVANT PARTY SHALL BE NOTIFIED IN WRITING OF ANY DISCREPANCIES.
4. THIS DRAWING MUST BE READ IN CONJUNCTION WITH ALL RELEVANT CONTRACTS, SPECIFICATIONS, REPORTS AND DRAWINGS.

NOTES:

1. REFER TO 12-A-152-ST004 FOR GENERAL STEEL NOTES
2. REFER TO ARCHITECTURAL DRAWINGS FOR TYP. SYSTEM WIDE PROPRIETARY HANDRAIL DETAILS

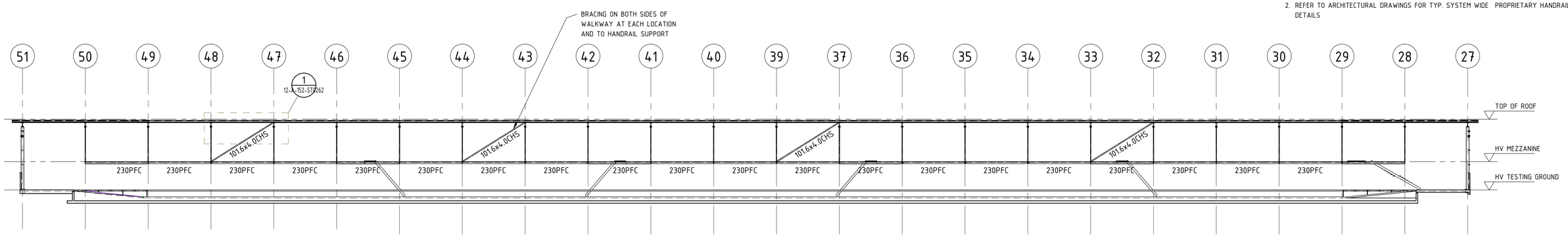

SECTION 5
1 : 250 12-A-152-ST0210

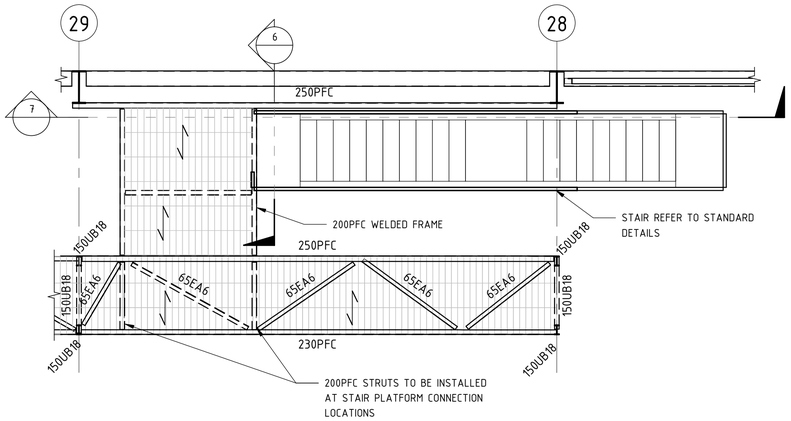

DETAIL 4
1 : 50 12-A-152-ST0223

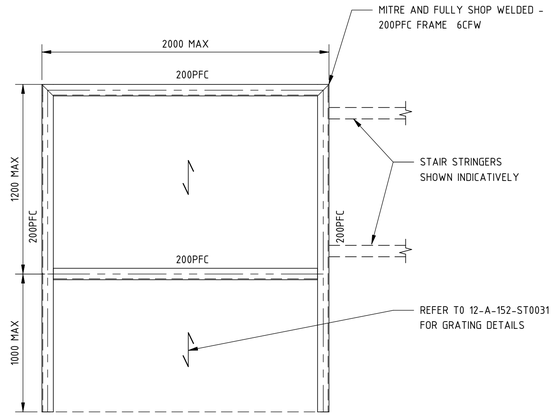

200PFC WELDED FRAME STAIR LANDING PLATFORM PLAN
1 : 20

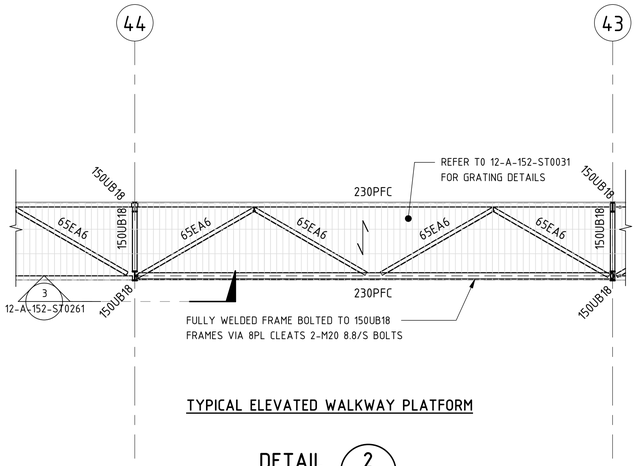

TYPICAL ELEVATED WALKWAY PLATFORM

DETAIL 2
1 : 50 12-A-152-ST0221

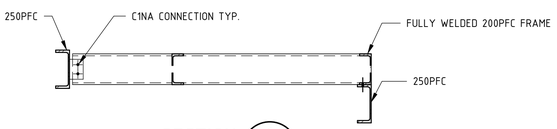

SECTION 6
1 : 20 12-A-152-ST0261

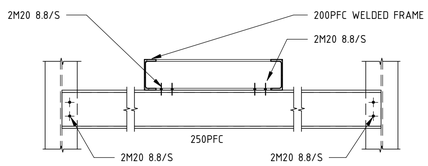

SECTION 7
1 : 20 12-A-152-ST0261

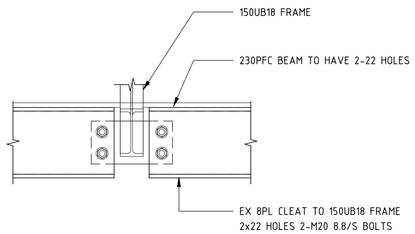

SECTION 3
1 : 10 12-A-152-ST0261

USE OF THESE DRAWINGS

1. THIS DRAWING SHALL BE READ IN CONJUNCTION WITH THE DISCIPLINE CONTRACT SPECIFICATION AND OTHER PROJECT DOCUMENTS.
2. DRAWINGS AND DESIGNS UNDERTAKEN BY A SHOP DETAILER SHALL BE PRESENTED TO THE PTA FOR REVIEW AND CONCURRENCE THAT THE DESIGN INTENT HAS BEEN ACHIEVED.
3. THE CONTRACTORS SHALL BE FULLY AWARE OF THE OTHER INTERFACING PACKAGES AND SHALL HAVE DEEMED TO HAVE INCLUDED INTER-TRADE INTERFACES. THE INTERFACES IDENTIFIED IN THE DOCUMENTATION ARE TO INDICATE AN INTENT AND ARE NOT INTENDED TO BE EXHAUSTIVE. MAKE ALLOWANCES AS REQUIRED.

ISSUED FOR CONSTRUCTION

REV	DATE	AMENDMENT	DSN	DRN	CHKD	APP
0	01.10.19	ISSUED FOR CONSTRUCTION	J.S.	A.C.D.	M.P.	G.B.

ORIG SIZE A1

0 2.5 5 7.5 10 12.5 25m
SCALE 1:250 AT A1

This document must not be copied without PTA's written permission, and the contents thereof must not be imparted to a third party nor be used for any unauthorised purpose.

aurecon
www.aurecongroup.com

505695-0000-DRG-ST-1711

REFERENCES

SCALE : As indicated (@ A1)
DATUM : HORIZONTAL: PCG94 VERTICAL: AHD71
PTA ACCEPTANCE STAMP

DESIGNED J.SPANO
DRAWN A.DAWSON
CHECKED M.PEARCE
APPROVED FOR ISSUE G.BENTLEY
DATE

Government of Western Australia Public Transport Authority
DETAILED DESIGN FOR THE BELLEVUE DEPOT

HV TESTING FACILITY
STRUCTURAL
PLATFORM DETAILS

PTA Drawing No: 12-A-152-ST0261 REV : 0

Plot Date: 10/1/2019 9:26:08 AM Office: PERTH Filename: BIM 360://505695 - Bellevue Depot/505695-ST-BELLEVUE DEPOT-02B.rvt

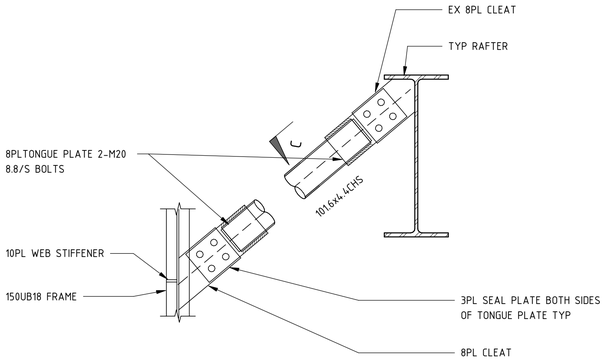

SECTION 1
1 : 10 12-A-152-ST0261

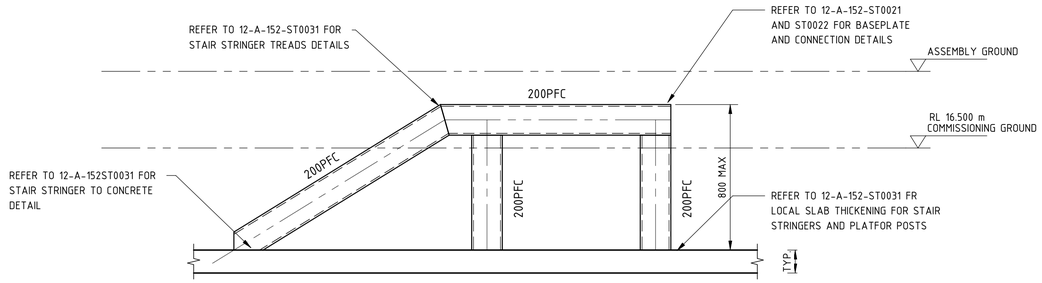

TYPICAL LOW LEVEL STAIR PLATFORM ELEVATION
1 : 20

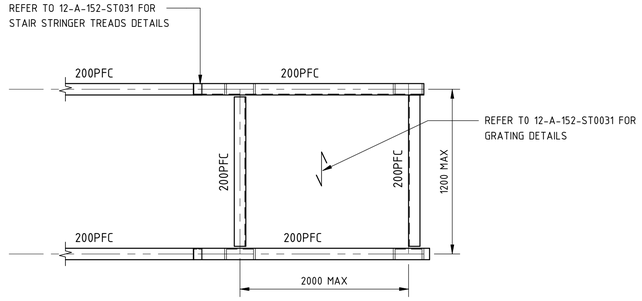

TYPICAL LOW LEVEL STAIR PLATFORM PLAN
1 : 20

ZONE PLAN

NOTES:

1. DO NO SCALE DRAWINGS. WRITTEN DIMENSIONS GOVERN.
2. ALL DIMENSIONS ARE IN MILLIMETRES UNLESS NOTED OTHERWISE
3. ALL DIMENSIONS SHALL BE VERIFIED ON SITE BEFORE PROCEEDING WITH THE WORK. RELEVANT PARTY SHALL BE NOTIFIED IN WRITING OF ANY DISCREPANCIES.
4. THIS DRAWING MUST BE READ IN CONJUNCTION WITH ALL RELEVANT CONTRACTS, SPECIFICATIONS, REPORTS AND DRAWINGS.

NOTES:

1. REFER TO 12-A-152-ST004 FOR GENERAL STEEL NOTES
2. REFER TO ARCHITECTURAL DRAWINGS FOR TYP. SYSTEM WIDE PROPRIETARY HANDRAIL DETAILS

USE OF THESE DRAWINGS

1. THIS DRAWING SHALL BE READ IN CONJUNCTION WITH THE DISCIPLINE CONTRACT SPECIFICATION AND OTHER PROJECT DOCUMENTS.
2. DRAWINGS AND DESIGNS UNDERTAKEN BY A SHOP DETAILER SHALL BE PRESENTED TO THE PTA FOR REVIEW AND CONCURRENCE THAT THE DESIGN INTENT HAS BEEN ACHIEVED.
3. THE CONTRACTORS SHALL BE FULLY AWARE OF THE OTHER INTERFACING PACKAGES AND SHALL HAVE DEEMED TO HAVE INCLUDED INTER-TRADE INTERFACES. THE INTERFACES IDENTIFIED IN THE DOCUMENTATION ARE TO INDICATE AN INTENT AND ARE NOT INTENDED TO BE EXHAUSTIVE. MAKE ALLOWANCES AS REQUIRED.

ISSUED FOR CONSTRUCTION

REV	DATE	AMENDMENT	DSN	DRN	CHKD	APP
0	01.10.19	ISSUED FOR CONSTRUCTION	J.S.	A.C.D.	M.P.	G.B.

ORIG SIZE A1

0 100 200 300 400 500 1000mm
SCALE 1:10 AT A1

This document must not be copied without PTA's written permission, and the contents thereof must not be imparted to a third party nor be used for any unauthorised purpose.

aurecon
www.aurecongroup.com

505695-0000-DRG-ST-1712

REFERENCES

SCALE : As indicated (@ A1)
DATUM : HORIZONTAL: PCG94
VERTICAL: AHD71
PTA ACCEPTANCE STAMP

DESIGNED J.SPANO
DRAWN A.DAWSON
CHECKED M.PEARCE
APPROVED FOR ISSUE
G.BENTLEY
DATE

Government of Western Australia Public Transport Authority
DETAILED DESIGN FOR THE BELLEVUE DEPOT

HV TESTING FACILITY
STRUCTURAL
SECTION AND DETAILS

PTA Drawing No: 12-A-152-ST0262 REV : 0

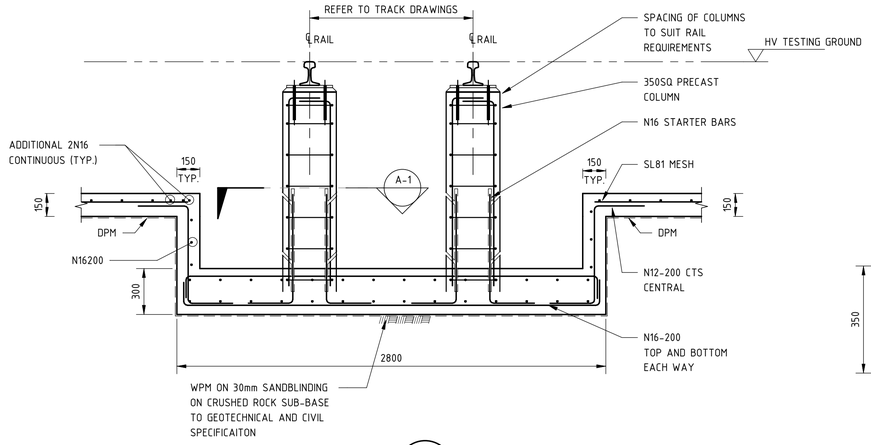

DETAIL A
1 : 20 12-A-152-ST0260

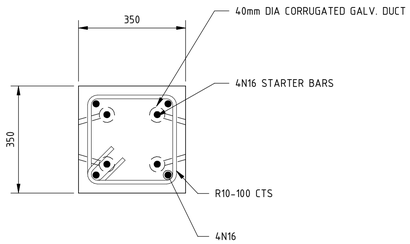

SECTION A-1
1 : 10 -

ZONE PLAN

NOTES:

1. DO NO SCALE DRAWINGS. WRITTEN DIMENSIONS GOVERN.
2. ALL DIMENSIONS ARE IN MILLIMETRES UNLESS NOTED OTHERWISE
3. ALL DIMENSIONS SHALL BE VERIFIED ON SITE BEFORE PROCEEDING WITH THE WORK. RELEVANT PARTY SHALL BE NOTIFIED IN WRITING OF ANY DISCREPANCIES.
4. THIS DRAWING MUST BE READ IN CONJUNCTION WITH ALL RELEVANT CONTRACTS, SPECIFICATIONS, REPORTS AND DRAWINGS.

NOTES:

1. REFER TO 12-A-152-ST003 FOR GENERAL CONCRETE NOTES
2. REFER TO 12-A-152-ST0010 & ST0011 FOR STEEL REINFORCEMENT AND CONCRETE DETAILS

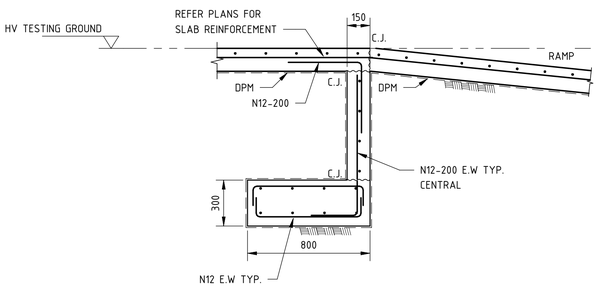

SECTION 7
1 : 20 12-A-152-ST0211

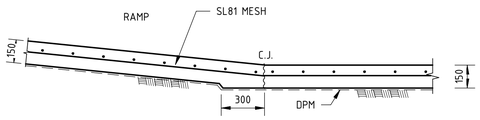

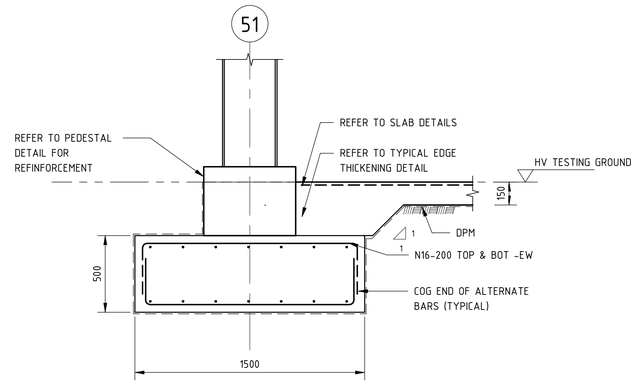

SECTION 2
1 : 20 12-A-152-ST0210

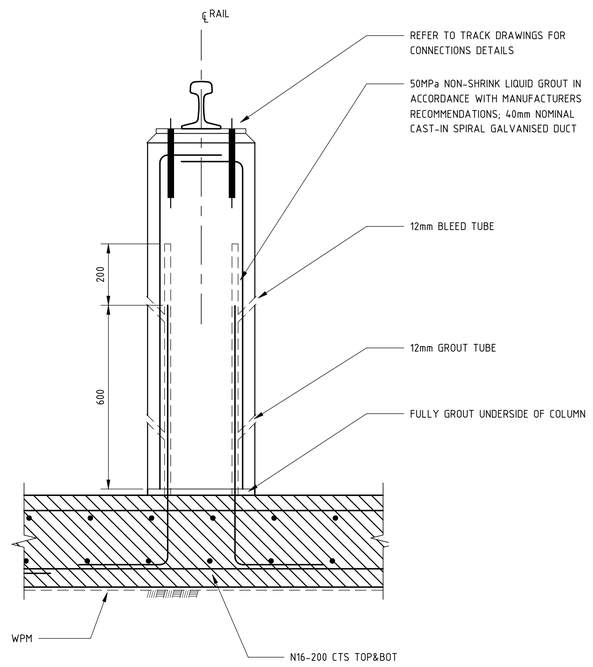

TYPICAL PRECAST COLUMN DETAIL
1 : 10

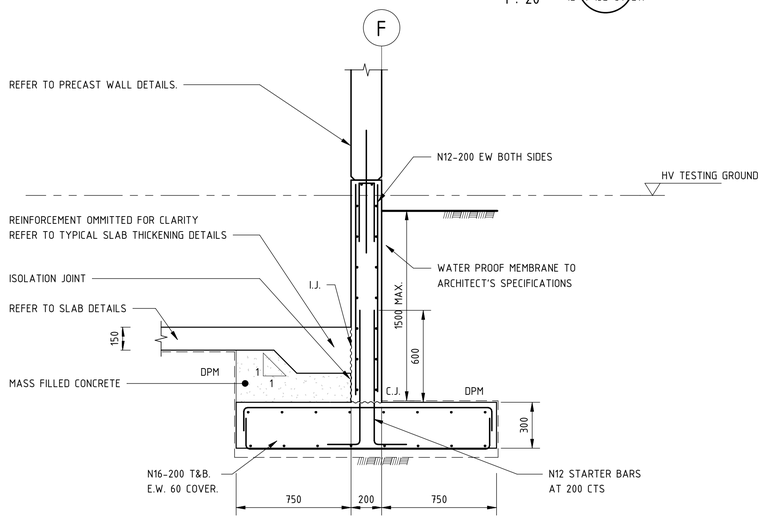

TYPICAL RETAINING WALL
GRID F&G

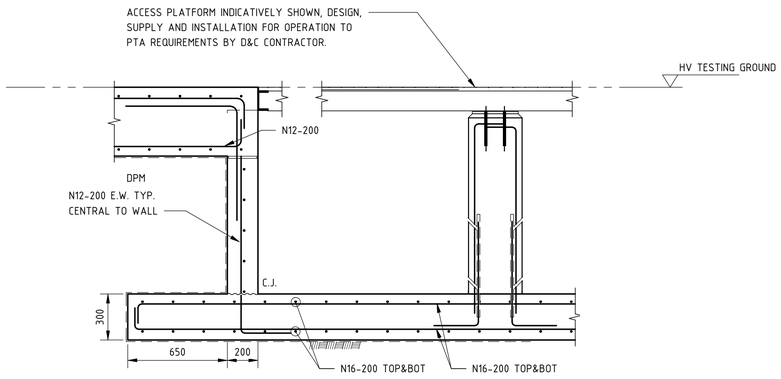

SECTION 8
1 : 20 12-A-152-ST0211

USE OF THESE DRAWINGS

1. THIS DRAWING SHALL BE READ IN CONJUNCTION WITH THE DISCIPLINE CONTRACT SPECIFICATION AND OTHER PROJECT DOCUMENTS.
2. DRAWINGS AND DESIGNS UNDERTAKEN BY A SHOP DETAILER SHALL BE PRESENTED TO THE PTA FOR REVIEW AND CONCURRENCE THAT THE DESIGN INTENT HAS BEEN ACHIEVED.
3. THE CONTRACTORS SHALL BE FULLY AWARE OF THE OTHER INTERFACING PACKAGES AND SHALL HAVE DEEMED TO HAVE INCLUDED INTER-TRADE INTERFACES. THE INTERFACES IDENTIFIED IN THE DOCUMENTATION ARE TO INDICATE AN INTENT AND ARE NOT INTENDED TO BE EXHAUSTIVE. MAKE ALLOWANCES AS REQUIRED.

ISSUED FOR CONSTRUCTION

REV	DATE	AMENDMENT	DSN	DRN	CHKD	APP
0	01.10.19	ISSUED FOR CONSTRUCTION	J.S.	A.C.D.	M.P.	G.B.

ORIG SIZE A1 — 0 0.2 0.4 0.6 0.8 1 2m — SCALE 1:20 AT A1

This document must not be copied without PTA's written permission, and the contents thereof must not be imparted to a third party nor be used for any unauthorised purpose.

aurecon
www.aurecongroup.com

505695-0000-DRG-ST-1810

REFERENCES

SCALE : As indicated (@ A1)
DATUM : HORIZONTAL: PCG94 VERTICAL: AHD71
PTA ACCEPTANCE STAMP

DESIGNED J.SPANO
DRAWN A.DAWSON
CHECKED M.PEARCE
APPROVED FOR ISSUE G.BENTLEY
DATE

Government of Western Australia Public Transport Authority
DETAILED DESIGN FOR THE BELLEVUE DEPOT
HV TESTING FACILITY
STRUCTURAL
SECTIONS AND DETAILS - SHEET 1 OF 7
PTA Drawing No: 12-A-152-ST0270 REV : 0

Plot Date: 10/1/2019 9:26:12 AM Office: PERTH Filename: BIM 360://505695 - Bellevue Depot/505695-ST-BELLEVUE DEPOT-02B.rvt

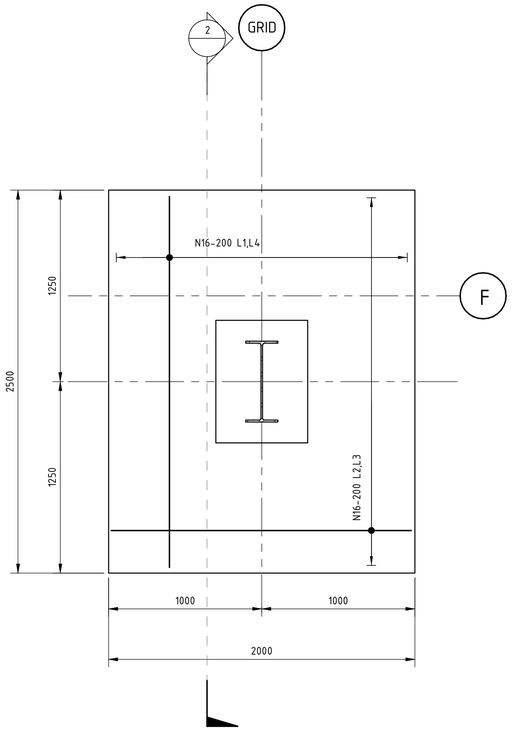

PF1 PAD FOOTING PLAN

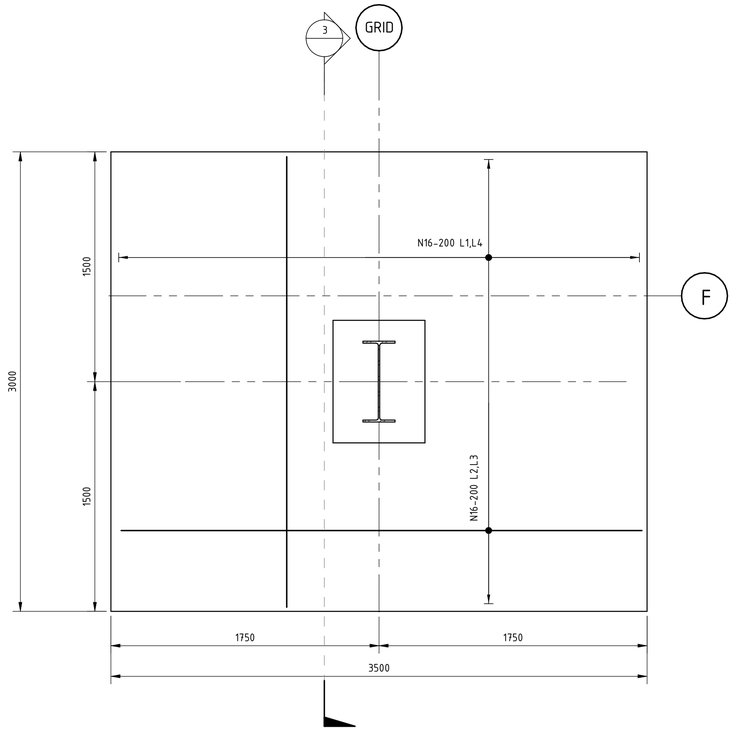

PF2 PAD FOOTING PLAN

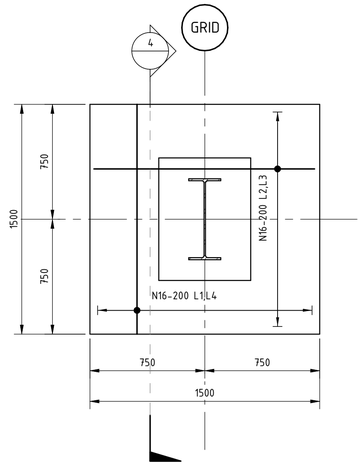

PF3 PAD FOOTING PLAN

ZONE PLAN

NOTES:

1. DO NO SCALE DRAWINGS. WRITTEN DIMENSIONS GOVERN.
2. ALL DIMENSIONS ARE IN MILLIMETRES UNLESS NOTED OTHERWISE
3. ALL DIMENSIONS SHALL BE VERIFIED ON SITE BEFORE PROCEEDING WITH THE WORK. RELEVANT PARTY SHALL BE NOTIFIED IN WRITING OF ANY DISCREPANCIES.
4. THIS DRAWING MUST BE READ IN CONJUNCTION WITH ALL RELEVANT CONTRACTS, SPECIFICATIONS, REPORTS AND DRAWINGS.

NOTES:

1. REFER TO 12-A-152-ST003 FOR GENERAL CONCRETE NOTES
2. REFER TO 12-A-152-ST0010 & ST0011 FOR STEEL REINFORCEMENT AND CONCRETE DETAILS
3. THOROUGHLY SCABBLE AND CLEAN CONSTRUCTION JOINT BETWEEN PEDESTAL AND PAD
4. REFER TO 12-A-152-ST0272 FOR PEDESTAL DETAILS
5. OVERBREAK UNDER FOOTING TO BE FILLED WITH LEAN CONCRETE
6. OVERBREAK AROUND FOOTING TO BE FILLED WITH MASS CONCRETE

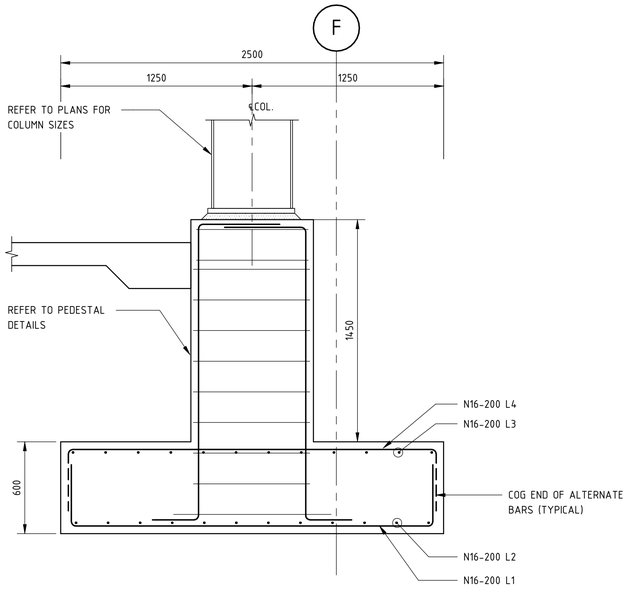

SECTION 2
1 : 20

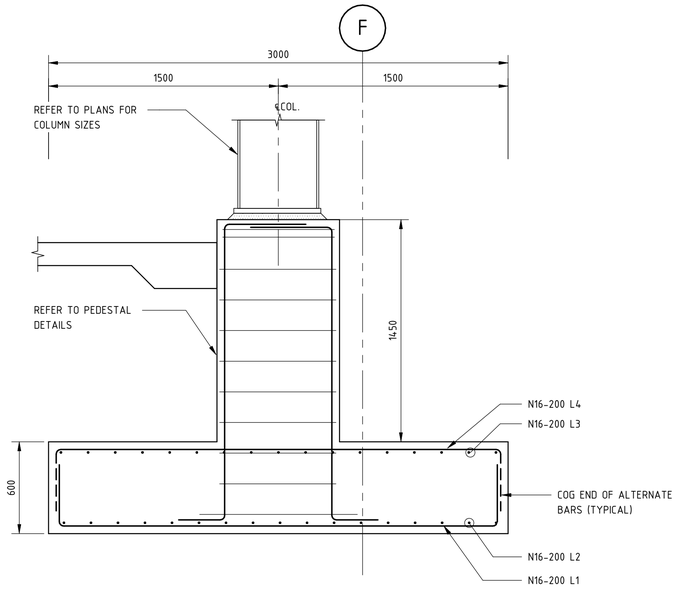

SECTION 3
1 : 20

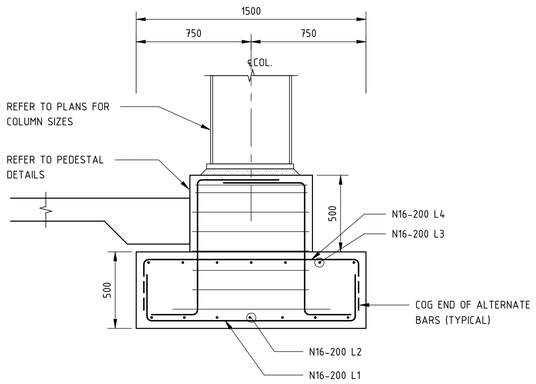

SECTION 4
1 : 20

NOTE:

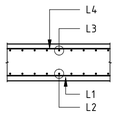

REINFORCEMENT KEY

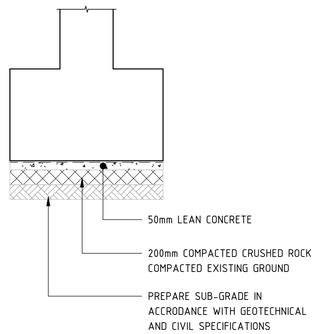

TYPICAL COMPACTION DETAIL

USE OF THESE DRAWINGS

1. THIS DRAWING SHALL BE READ IN CONJUNCTION WITH THE DISCIPLINE CONTRACT SPECIFICATION AND OTHER PROJECT DOCUMENTS.
2. DRAWINGS AND DESIGNS UNDERTAKEN BY A SHOP DETAILER SHALL BE PRESENTED TO THE PTA FOR REVIEW AND CONCURRENCE THAT THE DESIGN INTENT HAS BEEN ACHIEVED.
3. THE CONTRACTORS SHALL BE FULLY AWARE OF THE OTHER INTERFACING PACKAGES AND SHALL HAVE DEEMED TO HAVE INCLUDED INTER-TRADE INTERFACES. THE INTERFACES IDENTIFIED IN THE DOCUMENTATION ARE TO INDICATE AN INTENT AND ARE NOT INTENDED TO BE EXHAUSTIVE. MAKE ALLOWANCES AS REQUIRED.

ISSUED FOR CONSTRUCTION

REV	DATE	AMENDMENT	DSN	DRN	CHKD	APP
0	01.10.19	ISSUED FOR CONSTRUCTION	J.S.	A.C.D.	M.P.	G.B.

ORIG SIZE A1

0 0.2 0.4 0.6 0.8 1 2m
SCALE 1:20 AT A1

This document must not be copied without PTA's written permission, and the contents thereof must not be imparted to a third party nor be used for any unauthorised purpose.

aurecon
www.aurecongroup.com

505695-0000-DRG-ST-1811

REFERENCES

SCALE : As indicated (@ A1)
DATUM : HORIZONTAL: PCG94 VERTICAL: AHD71
PTA ACCEPTANCE STAMP

DESIGNED J.SPANO
DRAWN A.DAWSON
CHECKED M.PEARCE
APPROVED FOR ISSUE
G.BENTLEY
DATE

Government of Western Australia Public Transport Authority

DETAILED DESIGN FOR THE BELLEVUE DEPOT

HV TESTING FACILITY
STRUCTURAL
SECTIONS AND DETAILS - SHEET 2 OF 7

PTA Drawing No: 12-A-152-ST0271 REV : 0

Plot Date: 10/1/2019 9:26:14 AM Office: PERTH Filename: BIM 360://505695 - Bellevue Depot/505695-ST-BELLEVUE DEPOT-02B.rvt

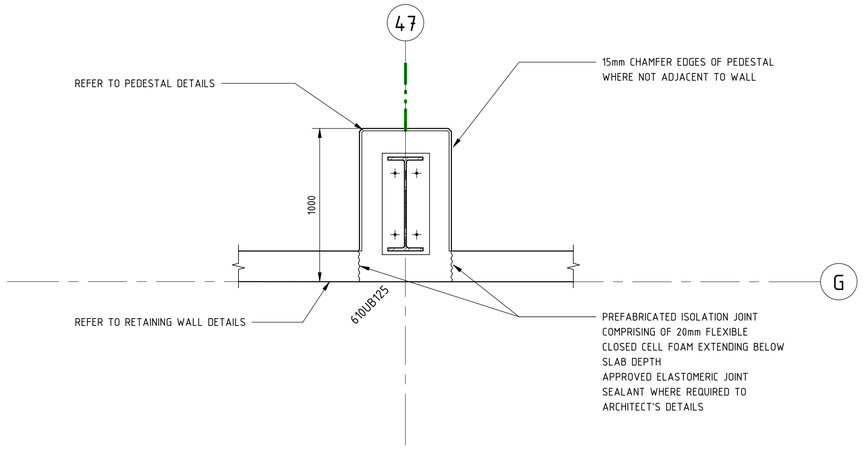

DETAIL 1
1 : 20 12-A-152-ST0211

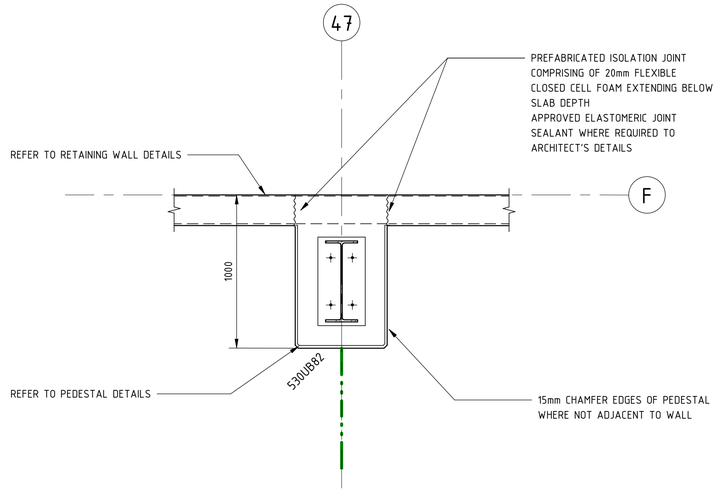

DETAIL 2
1 : 20 12-A-152-ST0211

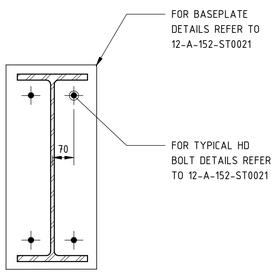

TYPICAL BASEPLATE DETAIL
1 : 10

ZONE PLAN

NOTES:

1. DO NO SCALE DRAWINGS. WRITTEN DIMENSIONS GOVERN.
2. ALL DIMENSIONS ARE IN MILLIMETRES UNLESS NOTED OTHERWISE
3. ALL DIMENSIONS SHALL BE VERIFIED ON SITE BEFORE PROCEEDING WITH THE WORK. RELEVANT PARTY SHALL BE NOTIFIED IN WRITING OF ANY DISCREPANCIES.
4. THIS DRAWING MUST BE READ IN CONJUNCTION WITH ALL RELEVANT CONTRACTS, SPECIFICATIONS, REPORTS AND DRAWINGS.

NOTES:

1. REFER TO PLANS FOR PEDESTAL SET OUT AND PAD FOOTING DETAILS
2. PROVIDE ADDITIONAL SET OF TIES WITH 100mm FROM TOP OF PEDESTAL
3. FIRST SET OR PEDESTAL TIES TO BE A MAX 50MM FROM BASE OF PEDESTAL
4. PROVIDE MIN. 2 SETS OF TIES TO PEDESTAL STARTER BARS WITHIN PAD DEPTH
5. PAD REINFORCEMENT OMITTED FOR CLARITY
6. THIS DRAWING SHOULD BE READ IN CONJUNCTION WITH THE STANDARD DETAILS AND NOTES
7. REFER TO 12-A-152-ST003 FOR GENERAL CONCRETE NOTES
8. REFER TO 12-A-152-ST0010 & ST0011 FOR STEEL REINFORCEMENT AND CONCRETE DETAILS

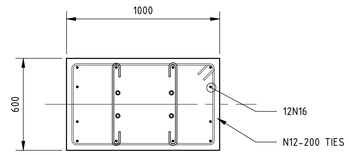

TYPICAL SECTION THROUGH P1

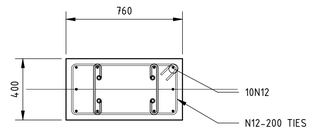

TYPICAL SECTION THROUGH P2

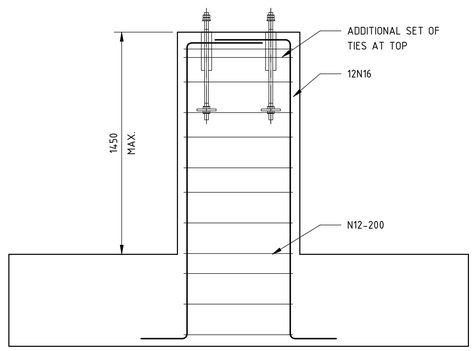

SECTION THROUGH P1

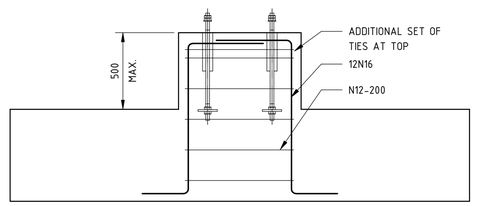

SECTION THROUGH P2

USE OF THESE DRAWINGS

1. THIS DRAWING SHALL BE READ IN CONJUNCTION WITH THE DISCIPLINE CONTRACT SPECIFICATION AND OTHER PROJECT DOCUMENTS.
2. DRAWINGS AND DESIGNS UNDERTAKEN BY A SHOP DETAILER SHALL BE PRESENTED TO THE PTA FOR REVIEW AND CONCURRENCE THAT THE DESIGN INTENT HAS BEEN ACHIEVED.
3. THE CONTRACTORS SHALL BE FULLY AWARE OF THE OTHER INTERFACING PACKAGES AND SHALL HAVE DEEMED TO HAVE INCLUDED INTER-TRADE INTERFACES. THE INTERFACES IDENTIFIED IN THE DOCUMENTATION ARE TO INDICATE AN INTENT AND ARE NOT INTENDED TO BE EXHAUSTIVE. MAKE ALLOWANCES AS REQUIRED.

ISSUED FOR CONSTRUCTION

REV	DATE	AMENDMENT	DSN	DRN	CHKD	APP
0	01.10.19	ISSUED FOR CONSTRUCTION	J.S.	A.C.D.	M.P.	G.B.

ORIG SIZE A1

0 0.2 0.4 0.6 0.8 1 2m
SCALE 1:20 AT A1

This document must not be copied without PTA's written permission, and the contents thereof must not be imparted to a third party nor be used for any unauthorised purpose.

aurecon
www.aurecongroup.com

505695-0000-DRG-ST-1812

REFERENCES

SCALE : As indicated (@ A1)
DATUM : HORIZONTAL: PCG94 VERTICAL: AHD71
PTA ACCEPTANCE STAMP

DESIGNED J.SPANO
DRAWN A.DAWSON
CHECKED M.PEARCE
APPROVED FOR ISSUE G.BENTLEY
DATE

Government of Western Australia Public Transport Authority

DETAILED DESIGN FOR THE BELLEVUE DEPOT

HV TESTING FACILITY
STRUCTURAL
SECTIONS AND DETAILS - SHEET 3 OF 7

PTA Drawing No: 12-A-152-ST0272 REV : 0

Plot Date: 10/1/2019 9:26:16 AM Office: PERTH Filename: BIM 360://505695 - Bellevue Depot/505695-ST-BELLEVUE DEPOT-02B.rvt

ZONE PLAN

NOTES:

1. DO NO SCALE DRAWINGS. WRITTEN DIMENSIONS GOVERN.
2. ALL DIMENSIONS ARE IN MILLIMETRES UNLESS NOTED OTHERWISE
3. ALL DIMENSIONS SHALL BE VERIFIED ON SITE BEFORE PROCEEDING WITH THE WORK. RELEVANT PARTY SHALL BE NOTIFIED IN WRITING OF ANY DISCREPANCIES.
4. THIS DRAWING MUST BE READ IN CONJUNCTION WITH ALL RELEVANT CONTRACTS, SPECIFICATIONS, REPORTS AND DRAWINGS.

NOTES:

1. REFER TO 12-A-152-ST003 FOR GENERAL CONCRETE NOTES
2. REFER TO 12-A-152-ST0010 & ST0011 FOR STEEL REINFORCEMENT AND CONCRETE DETAILS

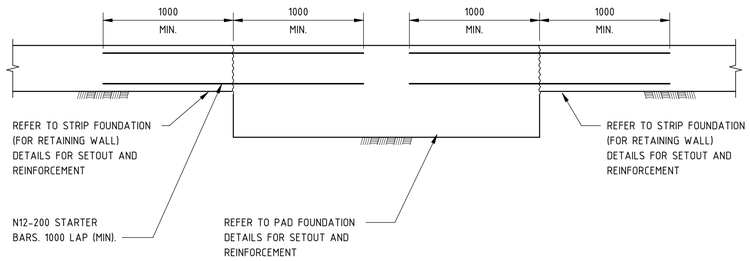

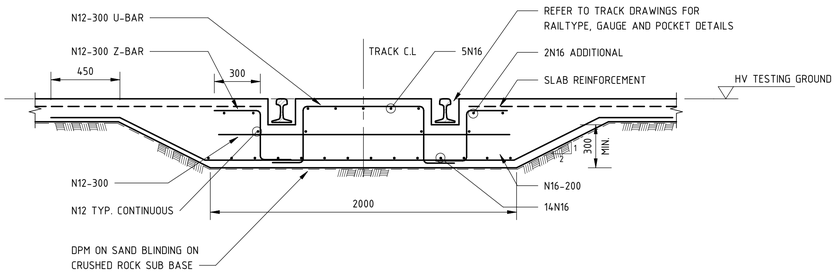

SLAB THICKENING FOR NARROW GAUGE TRACK

1 : 20

USE OF THESE DRAWINGS

1. THIS DRAWING SHALL BE READ IN CONJUNCTION WITH THE DISCIPLINE CONTRACT SPECIFICATION AND OTHER PROJECT DOCUMENTS.
2. DRAWINGS AND DESIGNS UNDERTAKEN BY A SHOP DETAILER SHALL BE PRESENTED TO THE PTA FOR REVIEW AND CONCURRENCE THAT THE DESIGN INTENT HAS BEEN ACHIEVED.
3. THE CONTRACTORS SHALL BE FULLY AWARE OF THE OTHER INTERFACING PACKAGES AND SHALL HAVE DEEMED TO HAVE INCLUDED INTER-TRADE INTERFACES. THE INTERFACES IDENTIFIED IN THE DOCUMENTATION ARE TO INDICATE AN INTENT AND ARE NOT INTENDED TO BE EXHAUSTIVE. MAKE ALLOWANCES AS REQUIRED.

ISSUED FOR CONSTRUCTION

REV	DATE	AMENDMENT	DSN	DRN	CHKD	APP
0	01.10.19	ISSUED FOR CONSTRUCTION	J.S.	A.C.D.	M.P.	G.B.

ORIG SIZE A1

0 0.2 0.4 0.6 0.8 1 2m

SCALE 1:20 AT A1

This document must not be copied without PTA's written permission, and the contents thereof must not be imparted to a third party nor be used for any unauthorised purpose.

aurecon

www.aurecongroup.com

505695-0000-DRG-ST-1813

REFERENCES

SCALE : As indicated (@ A1)

DATUM : HORIZONTAL: PCG94 VERTICAL: AHD71

PTA ACCEPTANCE STAMP

DESIGNED J.SPANO

DRAWN A.DAWSON

CHECKED M.PEARCE

APPROVED FOR ISSUE G.BENTLEY

DATE

Government of Western Australia Public Transport Authority

DETAILED DESIGN FOR THE BELLEVUE DEPOT

HV TESTING FACILITY

STRUCTURAL

SECTIONS AND DETAILS - SHEET 4 OF 7

PTA Drawing No: 12-A-152-ST0273 REV : 0

Plot Date: 10/1/2019 9:26:18 AM Office: PERTH Filename: BIM 360://505695 - Bellevue Depot/505695-ST-BELLEVUE DEPOT-02B.rvt

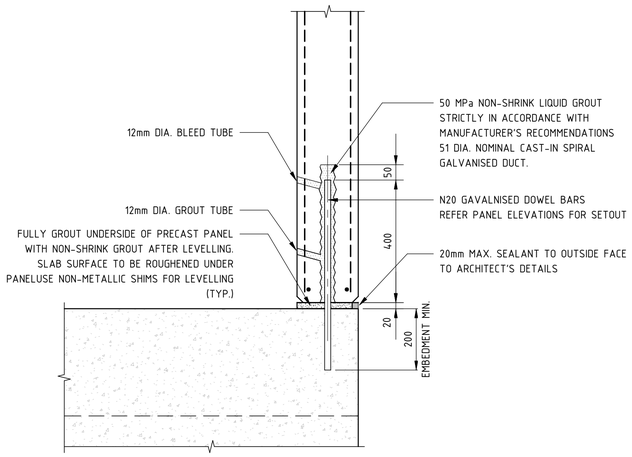

CONNECTION TYPE PC-CN01

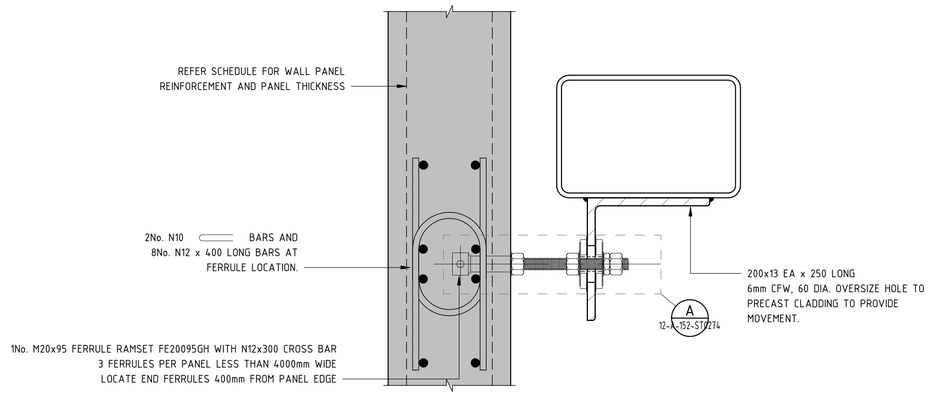

CONNECTION TYPE PC-CN02

ZONE PLAN

NOTES:

1. DO NO SCALE DRAWINGS. WRITTEN DIMENSIONS GOVERN.
2. ALL DIMENSIONS ARE IN MILLIMETRES UNLESS NOTED OTHERWISE
3. ALL DIMENSIONS SHALL BE VERIFIED ON SITE BEFORE PROCEEDING WITH THE WORK. RELEVANT PARTY SHALL BE NOTIFIED IN WRITING OF ANY DISCREPANCIES.
4. THIS DRAWING MUST BE READ IN CONJUNCTION WITH ALL RELEVANT CONTRACTS, SPECIFICATIONS, REPORTS AND DRAWINGS.

NOTES:

1. DOWEL TUBE SPACING ON PRECAST SHOP DRAWINGS SHALL INCORPORATE THE SURVEYED AS BUILT SETOUT OF DOWELS
2. IT IS THE CONTRACTORS RESPONSIBILITY TO CO-ORDINATE ALL PENETRATIONS FOR SERVICES ETC. ALL PENETRATIONS SHALL BE SHOWN ON SHOP DRAWINGS FOR APPROVAL PRIOR TO FABRICATION OF ANY PANEL
3. REFER TO THE ARCHITECTS DRAWINGS FOR ALL JOINTING DETAILS
4. REFER TO 12-A-152- ST0004 FOR PRECAST STANDARD NOTES

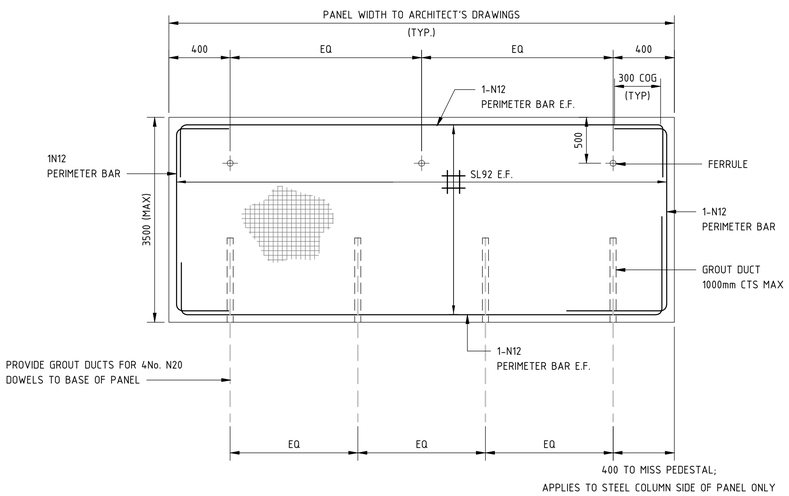

TYPICAL PANEL TYPE "PC01"

PRECAST PANEL: 150 STRUCTURAL THICKNESS

- BASE CONNECTION: PCN01
- TOP CONNECTION: PCN02

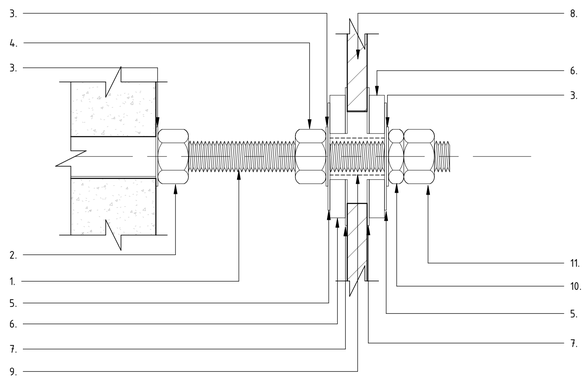

DETAIL A

1 : 2 12-A-152-ST0274

1. M20 STAINLESS STEEL THREADED ROD GRADE 316
2. M20 NUT INSTALLED IN ACCORDANCE WITH RAMSET TECHNICAL DATA SHEET
3. M20 STAINLESS STEEL WASHER
4. M20 STAINLESS STEEL NUT (TORQUE TO 80Nm)
5. 50 DIA. x1 ISOLATION WASHER WITH 22 DIA. HOLE
6. 80x80x10 GALVANISED PLATE WASHERS
7. 90x90x1.0 PTFE SLIP WASHER
8. GALVANISED ANGLE BRACKET
9. PVC INSOLATION TAPE ON BOLT SHANK
10. M20 STAINLESS STEEL LOCK NUT (TORQUE TO 80Nm)
11. M20/TB STAINLESS STEEL NUT

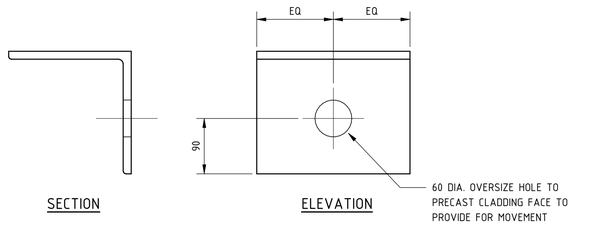

DETAIL B: TYPICAL ANGLE BRACKET

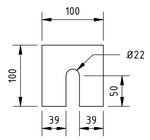

NOTE: PACKER PLATES TO BE PROVIDED IN THICKNESS OF 3mm & 10mm ALL PACKERS TO BE HOT DIP GALVANISED

PACKER PLATE DETAIL

USE OF THESE DRAWINGS

1. THIS DRAWING SHALL BE READ IN CONJUNCTION WITH THE DISCIPLINE CONTRACT SPECIFICATION AND OTHER PROJECT DOCUMENTS.
2. DRAWINGS AND DESIGNS UNDERTAKEN BY A SHOP DETAILER SHALL BE PRESENTED TO THE PTA FOR REVIEW AND CONCURRENCE THAT THE DESIGN INTENT HAS BEEN ACHIEVED.
3. THE CONTRACTORS SHALL BE FULLY AWARE OF THE OTHER INTERFACING PACKAGES AND SHALL HAVE DEEMED TO HAVE INCLUDED INTER-TRADE INTERFACES. THE INTERFACES IDENTIFIED IN THE DOCUMENTATION ARE TO INDICATE AN INTENT AND ARE NOT INTENDED TO BE EXHAUSTIVE. MAKE ALLOWANCES AS REQUIRED.

ISSUED FOR CONSTRUCTION

REV	DATE	AMENDMENT	DSN	DRN	CHKD	APP
0	01.10.19	ISSUED FOR CONSTRUCTION	J.S.	A.C.D.	M.P.	G.B.

ORIG SIZE A1

0 10 20 30 40 50 100mm
SCALE 1:1 AT A1

This document must not be copied without PTA's written permission, and the contents thereof must not be imparted to a third party nor be used for any unauthorised purpose.

aurecon
www.aurecongroup.com

505695-0000-DRG-ST-1012

REFERENCES

SCALE : As indicated (@ A1)
DATUM : HORIZONTAL: PCG94 VERTICAL: AHD71
PTA ACCEPTANCE STAMP

DESIGNED J.SPANO
DRAWN A.DAWSON
CHECKED M.PEARCE
APPROVED FOR ISSUE
G.BENTLEY
DATE

Government of Western Australia Public Transport Authority

DETAILED DESIGN FOR THE BELLEVUE DEPOT

HV TESTING FACILITY
STRUCTURAL
STANDARD PC CONCRETE DETAILS

PTA Drawing No: 12-A-152-ST0274 REV : 0

Plot Date: 10/1/2019 9:26:20 AM Office: PERTH Filename: BIM 360://505695 - Bellevue Depot/505695-ST-BELLEVUE DEPOT-02B.rvt

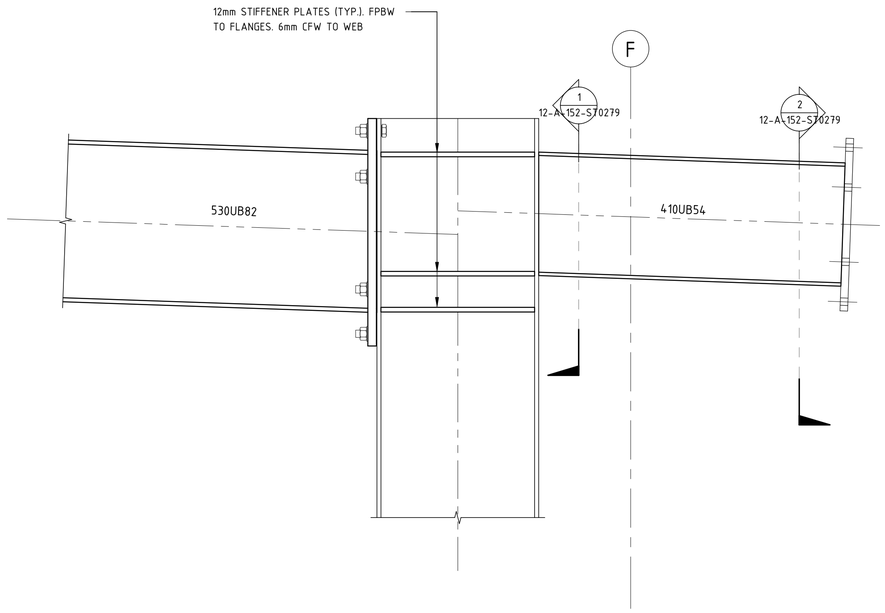

DETAIL 8
1 : 10 12-A-152-ST0260

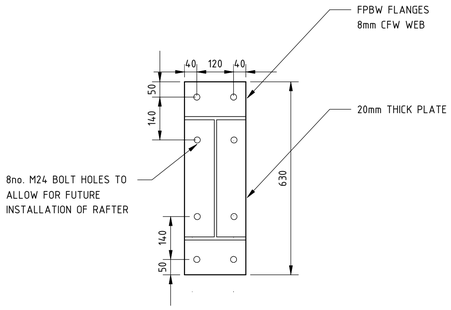

SECTION 1
1 : 10 –

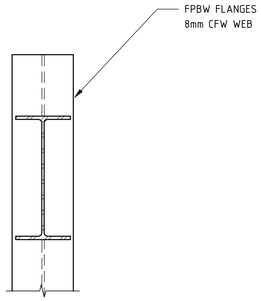

SECTION 2
1 : 10 –

ZONE PLAN

NOTES:

1. DO NO SCALE DRAWINGS. WRITTEN DIMENSIONS GOVERN.
2. ALL DIMENSIONS ARE IN MILLIMETRES UNLESS NOTED OTHERWISE
3. ALL DIMENSIONS SHALL BE VERIFIED ON SITE BEFORE PROCEEDING WITH THE WORK. RELEVANT PARTY SHALL BE NOTIFIED IN WRITING OF ANY DISCREPANCIES.
4. THIS DRAWING MUST BE READ IN CONJUNCTION WITH ALL RELEVANT CONTRACTS, SPECIFICATIONS, REPORTS AND DRAWINGS.

NOTES:

1. REFER TO 12-A-152-ST004 FOR GENERAL STEEL NOTES
2. REFER TO ARCHITECTURAL DRAWINGS FOR TYP. SYSTEM WIDE PROPRIETARY HANDRAIL DETAILS

USE OF THESE DRAWINGS

1. THIS DRAWING SHALL BE READ IN CONJUNCTION WITH THE DISCIPLINE CONTRACT SPECIFICATION AND OTHER PROJECT DOCUMENTS.
2. DRAWINGS AND DESIGNS UNDERTAKEN BY A SHOP DETAILER SHALL BE PRESENTED TO THE PTA FOR REVIEW AND CONCURRENCE THAT THE DESIGN INTENT HAS BEEN ACHIEVED.
3. THE CONTRACTORS SHALL BE FULLY AWARE OF THE OTHER INTERFACING PACKAGES AND SHALL HAVE DEEMED TO HAVE INCLUDED INTER-TRADE INTERFACES. THE INTERFACES IDENTIFIED IN THE DOCUMENTATION ARE TO INDICATE AN INTENT AND ARE NOT INTENDED TO BE EXHAUSTIVE. MAKE ALLOWANCES AS REQUIRED.

ISSUED FOR CONSTRUCTION

REV	DATE	AMENDMENT	DSN	DRN	CHKD	APP
0	01.10.19	ISSUED FOR CONSTRUCTION	J.S.	A.C.D.	M.P.	G.B.

ORIG SIZE A1

0 100 200 300 400 500 1000mm
SCALE 1:10 AT A1

This document must not be copied without PTA's written permission, and the contents thereof must not be imparted to a third party nor be used for any unauthorised purpose.

aurecon
www.aurecongroup.com

505695-0000-DRG-ST-1820

REFERENCES

SCALE : As indicated (@ A1)
DATUM : HORIZONTAL: PCG94 VERTICAL: AHD71
PTA ACCEPTANCE STAMP

DESIGNED J.SPANO
DRAWN A.DAWSON
CHECKED M.PEARCE
APPROVED FOR ISSUE
G.BENTLEY
DATE

Government of Western Australia Public Transport Authority
DETAILED DESIGN FOR THE BELLEVUE DEPOT

HV TESTING FACILITY
STRUCTURAL
SECTIONS AND DETAILS - SHEET 6 OF 7

PTA Drawing No: 12-A-152-ST0279 REV : 0

Plot Date: 10/1/2019 9:26:22 AM Office: PERTH Filename: BIM 360://505695 - Bellevue Depot/505695-ST-BELLEVUE DEPOT-02B.rvt

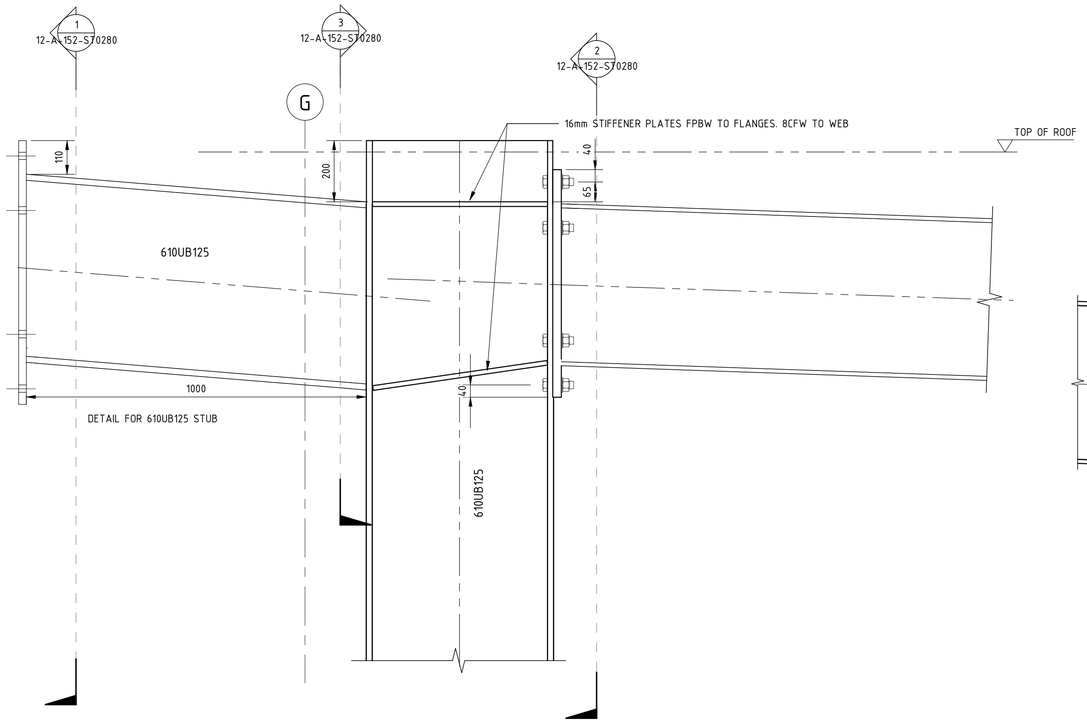

DETAIL 5
1 : 10 12-A-152-ST0258

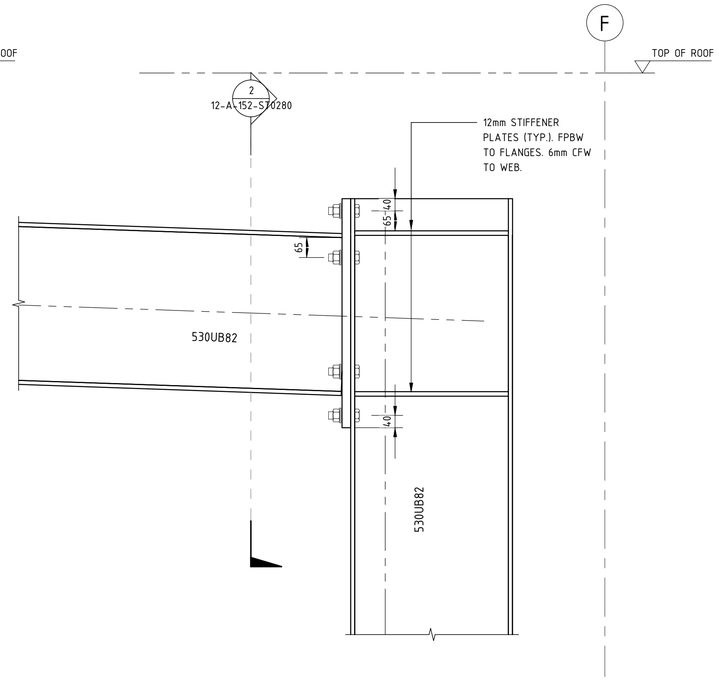

DETAIL 6
1 : 10 12-A-152-ST0258

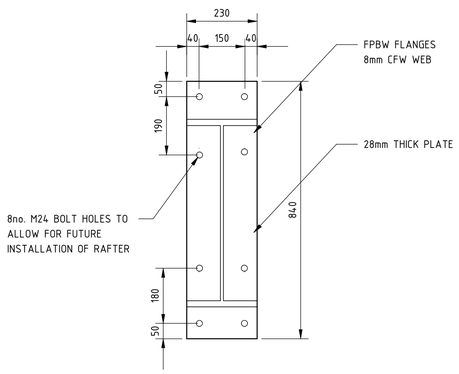

SECTION 1
1 : 10 –

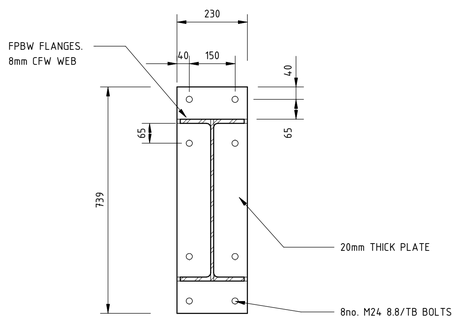

SECTION 2
1 : 10 –

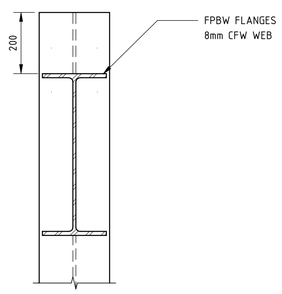

SECTION 3
1 : 10 –

ZONE PLAN

NOTES:

1. DO NO SCALE DRAWINGS. WRITTEN DIMENSIONS GOVERN.
2. ALL DIMENSIONS ARE IN MILLIMETRES UNLESS NOTED OTHERWISE
3. ALL DIMENSIONS SHALL BE VERIFIED ON SITE BEFORE PROCEEDING WITH THE WORK. RELEVANT PARTY SHALL BE NOTIFIED IN WRITING OF ANY DISCREPANCIES.
4. THIS DRAWING MUST BE READ IN CONJUNCTION WITH ALL RELEVANT CONTRACTS, SPECIFICATIONS, REPORTS AND DRAWINGS.

NOTES:

1. REFER TO 12-A-152-ST004 FOR GENERAL STEEL NOTES
2. REFER TO ARCHITECTURAL DRAWINGS FOR TYP. SYSTEM WIDE PROPRIETARY HANDRAIL DETAILS

USE OF THESE DRAWINGS

1. THIS DRAWING SHALL BE READ IN CONJUNCTION WITH THE DISCIPLINE CONTRACT SPECIFICATION AND OTHER PROJECT DOCUMENTS.
2. DRAWINGS AND DESIGNS UNDERTAKEN BY A SHOP DETAILER SHALL BE PRESENTED TO THE PTA FOR REVIEW AND CONCURRENCE THAT THE DESIGN INTENT HAS BEEN ACHIEVED.
3. THE CONTRACTORS SHALL BE FULLY AWARE OF THE OTHER INTERFACING PACKAGES AND SHALL HAVE DEEMED TO HAVE INCLUDED INTER-TRADE INTERFACES. THE INTERFACES IDENTIFIED IN THE DOCUMENTATION ARE TO INDICATE AN INTENT AND ARE NOT INTENDED TO BE EXHAUSTIVE. MAKE ALLOWANCES AS REQUIRED.

ISSUED FOR CONSTRUCTION

REV	DATE	AMENDMENT	DSN	DRN	CHKD	APP
0	01.10.19	ISSUED FOR CONSTRUCTION	J.S.	A.C.D.	M.P.	G.B.

ORIG SIZE A1

0 100 200 300 400 500 1000mm
SCALE 1:10 AT A1

This document must not be copied without PTA's written permission, and the contents thereof must not be imparted to a third party nor be used for any unauthorised purpose.

aurecon
www.aurecongroup.com

505695-0000-DRG-ST-1820

REFERENCES

SCALE : As indicated (@ A1)
DATUM :
HORIZONTAL: PCG94
VERTICAL: AHD71
PTA ACCEPTANCE STAMP

DESIGNED J.SPANO
DRAWN A.DAWSON
CHECKED M.PEARCE
APPROVED FOR ISSUE
G.BENTLEY
DATE

Government of Western Australia Public Transport Authority

DETAILED DESIGN FOR THE BELLEVUE DEPOT

HV TESTING FACILITY
STRUCTURAL
SECTIONS AND DETAILS - SHEET 6 OF 7

PTA Drawing No: 12-A-152-ST0280 REV : 0

Plot Date: 10/1/2019 9:26:25 AM Office: PERTH Filename: BIM 360://505695 - Bellevue Depot/505695-ST-BELLEVUE DEPOT-02B.rvt

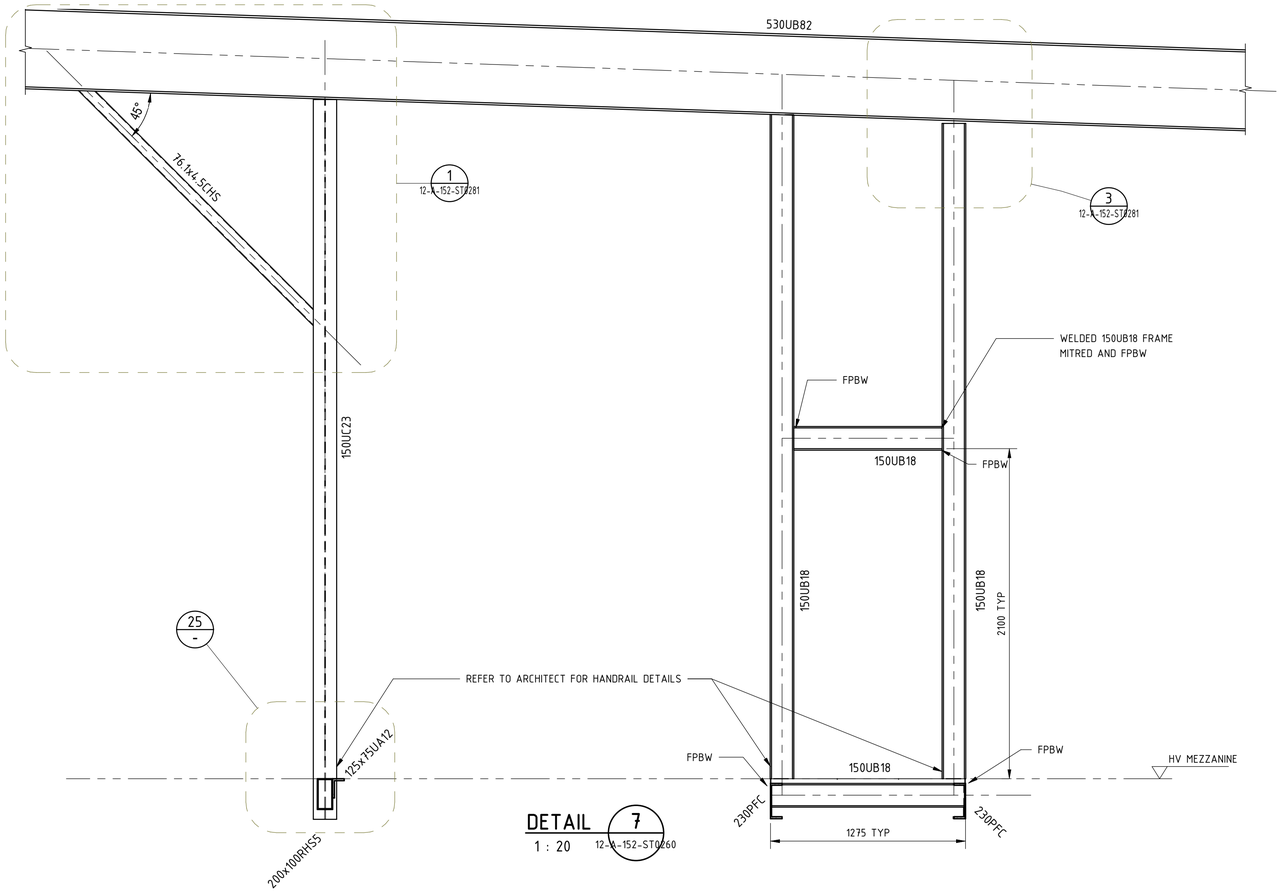

DETAIL 7
1 : 20 12-A-152-ST0260

ZONE PLAN

NOTES:

1. DO NO SCALE DRAWINGS. WRITTEN DIMENSIONS GOVERN.
2. ALL DIMENSIONS ARE IN MILLIMETRES UNLESS NOTED OTHERWISE
3. ALL DIMENSIONS SHALL BE VERIFIED ON SITE BEFORE PROCEEDING WITH THE WORK. RELEVANT PARTY SHALL BE NOTIFIED IN WRITING OF ANY DISCREPANCIES.
4. THIS DRAWING MUST BE READ IN CONJUNCTION WITH ALL RELEVANT CONTRACTS, SPECIFICATIONS, REPORTS AND DRAWINGS.

NOTES:

1. REFER TO 12-A-152-ST004 FOR GENERAL STEEL NOTES
2. REFER TO ARCHITECTURAL DRAWINGS FOR TYP. SYSTEM WIDE PROPRIETARY HANDRAIL DETAILS

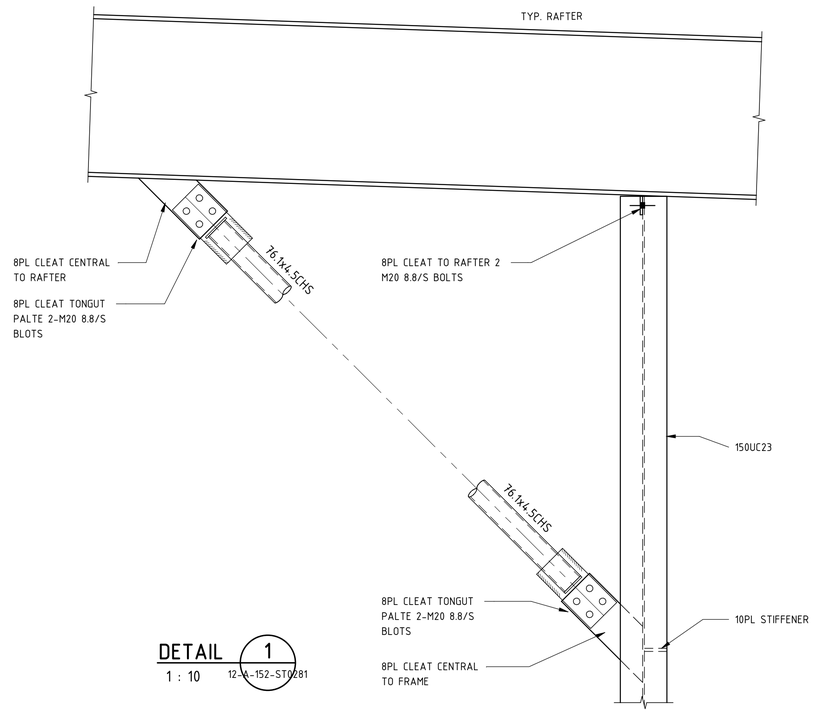

DETAIL 1
1 : 10 12-A-152-ST0281

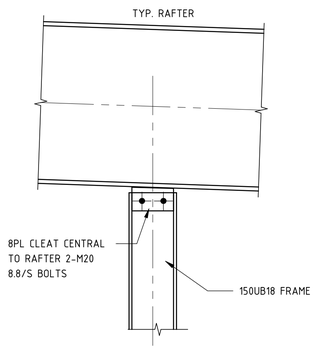

DETAIL 3
1 : 10 12-A-152-ST0281

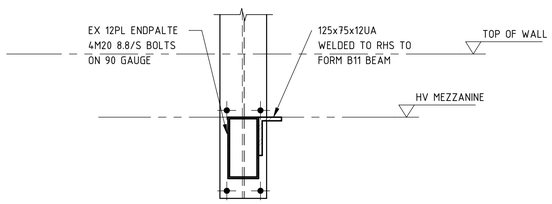

DETAIL 25
1 : 10

USE OF THESE DRAWINGS

1. THIS DRAWING SHALL BE READ IN CONJUNCTION WITH THE DISCIPLINE CONTRACT SPECIFICATION AND OTHER PROJECT DOCUMENTS.
2. DRAWINGS AND DESIGNS UNDERTAKEN BY A SHOP DETAILER SHALL BE PRESENTED TO THE PTA FOR REVIEW AND CONCURRENCE THAT THE DESIGN INTENT HAS BEEN ACHIEVED.
3. THE CONTRACTORS SHALL BE FULLY AWARE OF THE OTHER INTERFACING PACKAGES AND SHALL HAVE DEEMED TO HAVE INCLUDED INTER-TRADE INTERFACES. THE INTERFACES IDENTIFIED IN THE DOCUMENTATION ARE TO INDICATE AN INTENT AND ARE NOT INTENDED TO BE EXHAUSTIVE. MAKE ALLOWANCES AS REQUIRED.

ISSUED FOR CONSTRUCTION

REV	DATE	AMENDMENT	DSN	DRN	CHKD	APP
0	01.10.19	ISSUED FOR CONSTRUCTION	J.S.	A.C.D.	M.P.	G.B.

ORIG SIZE A1

0 0.2 0.4 0.6 0.8 1 2m
SCALE 1:20 AT A1

This document must not be copied without PTA's written permission, and the contents thereof must not be imparted to a third party nor be used for any unauthorised purpose.

aurecon
www.aurecongroup.com

505695-0000-DRG-ST-1821

REFERENCES

SCALE : As indicated (@ A1)
DATUM : HORIZONTAL: PCG94 VERTICAL: AHD71
PTA ACCEPTANCE STAMP

DESIGNED J.SPANO
DRAWN A.DAWSON
CHECKED M.PEARCE
APPROVED FOR ISSUE
G.BENTLEY
DATE

Government of Western Australia Public Transport Authority
DETAILED DESIGN FOR THE BELLEVUE DEPOT

HV TESTING FACILITY
STRUCTURAL
SECTIONS AND DETAILS - SHEET 7 OF 7

PTA Drawing No: 12-A-152-ST0281 REV : 0

Plot Date: 10/1/2019 9:26:27 AM Office: PERTH Filename: BIM 360://505695 - Bellevue Depot/505695-ST-BELLEVUE DEPOT-02B.rvt

ZONE PLAN

NOTES:

1. DO NO SCALE DRAWINGS. WRITTEN DIMENSIONS GOVERN.
2. ALL DIMENSIONS ARE IN MILLIMETRES UNLESS NOTED OTHERWISE
3. ALL DIMENSIONS SHALL BE VERIFIED ON SITE BEFORE PROCEEDING WITH THE WORK. RELEVANT PARTY SHALL BE NOTIFIED IN WRITING OF ANY DISCREPANCIES.
4. THIS DRAWING MUST BE READ IN CONJUNCTION WITH ALL RELEVANT CONTRACTS, SPECIFICATIONS, REPORTS AND DRAWINGS.

USE OF THESE DRAWINGS

1. THIS DRAWING SHALL BE READ IN CONJUNCTION WITH THE DISCIPLINE CONTRACT SPECIFICATION AND OTHER PROJECT DOCUMENTS.
2. DRAWINGS AND DESIGNS UNDERTAKEN BY A SHOP DETAILER SHALL BE PRESENTED TO THE PTA FOR REVIEW AND CONCURRENCE THAT THE DESIGN INTENT HAS BEEN ACHIEVED.
3. THE CONTRACTORS SHALL BE FULLY AWARE OF THE OTHER INTERFACING PACKAGES AND SHALL HAVE DEEMED TO HAVE INCLUDED INTER-TRADE INTERFACES. THE INTERFACES IDENTIFIED IN THE DOCUMENTATION ARE TO INDICATE AN INTENT AND ARE NOT INTENDED TO BE EXHAUSTIVE. MAKE ALLOWANCES AS REQUIRED.

ISSUED FOR CONSTRUCTION

REV	DATE	AMENDMENT	DSN	DRN	CHKD	APP
0	01.10.19	ISSUED FOR CONSTRUCTION	J.S.	A.C.D.	M.P.	G.B.

ORIG SIZE A1

0 2 4 6 8 10 20m

SCALE 1:200 AT A1

This document must not be copied without PTA's written permission, and the contents thereof must not be imparted to a third party nor be used for any unauthorised purpose.

aurecon

www.aurecongroup.com

505695-0000-DRG-ST-1910

REFERENCES

SCALE : 1 : 1 (@ A1)

DATUM :
HORIZONTAL: PCG94
VERTICAL: AHD71

PTA ACCEPTANCE STAMP

DESIGNED J.SPANO
DRAWN A.DAWSON
CHECKED M.PEARCE
APPROVED FOR ISSUE
G.BENTLEY
DATE

Government of Western Australia Public Transport Authority

DETAILED DESIGN FOR THE BELLEVUE DEPOT

HV TESTING FACILITY
STRUCTURAL
3D IMAGE - SHEET 1 OF 7 - GROUND

PTA Drawing No: 12-A-152-ST0290 REV : 0

Plot Date: 10/1/2019 9:26:31 AM Office: PERTH Filename: BIM 360://505695 - Bellevue Depot/505695-ST-BELLEVUE DEPOT-02B.rvt

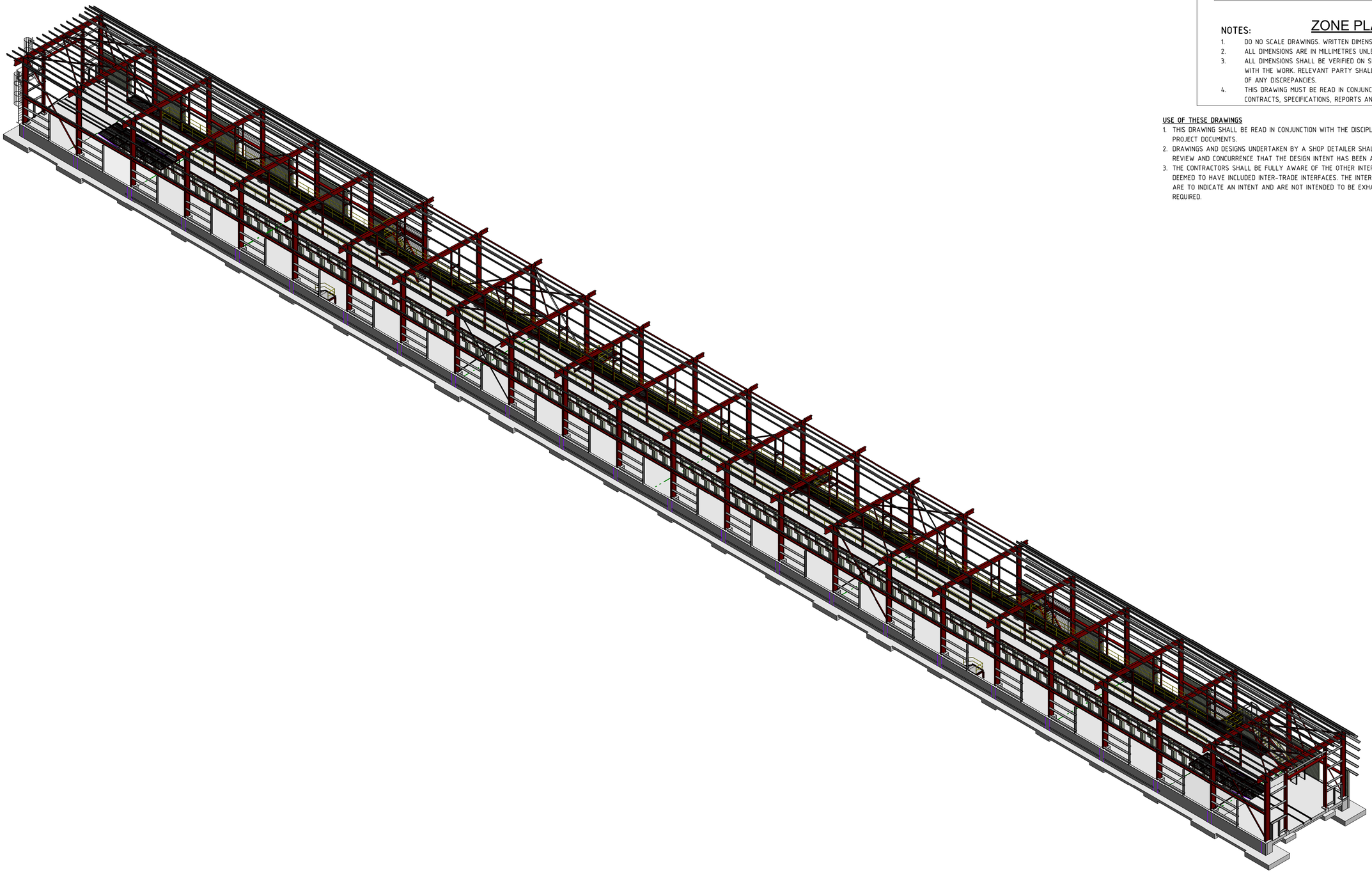

ZONE PLAN

NOTES:

1. DO NO SCALE DRAWINGS. WRITTEN DIMENSIONS GOVERN.
2. ALL DIMENSIONS ARE IN MILLIMETRES UNLESS NOTED OTHERWISE
3. ALL DIMENSIONS SHALL BE VERIFIED ON SITE BEFORE PROCEEDING WITH THE WORK. RELEVANT PARTY SHALL BE NOTIFIED IN WRITING OF ANY DISCREPANCIES.
4. THIS DRAWING MUST BE READ IN CONJUNCTION WITH ALL RELEVANT CONTRACTS, SPECIFICATIONS, REPORTS AND DRAWINGS.

USE OF THESE DRAWINGS

1. THIS DRAWING SHALL BE READ IN CONJUNCTION WITH THE DISCIPLINE CONTRACT SPECIFICATION AND OTHER PROJECT DOCUMENTS.
2. DRAWINGS AND DESIGNS UNDERTAKEN BY A SHOP DETAILER SHALL BE PRESENTED TO THE PTA FOR REVIEW AND CONCURRENCE THAT THE DESIGN INTENT HAS BEEN ACHIEVED.
3. THE CONTRACTORS SHALL BE FULLY AWARE OF THE OTHER INTERFACING PACKAGES AND SHALL HAVE DEEMED TO HAVE INCLUDED INTER-TRADE INTERFACES. THE INTERFACES IDENTIFIED IN THE DOCUMENTATION ARE TO INDICATE AN INTENT AND ARE NOT INTENDED TO BE EXHAUSTIVE. MAKE ALLOWANCES AS REQUIRED.

ISSUED FOR CONSTRUCTION

REV	DATE	AMENDMENT	DSN	DRN	CHKD	APP
0	01.10.19	ISSUED FOR CONSTRUCTION	J.S.	A.C.D.	M.P.	G.B.

ORIG SIZE A1

0 2 4 6 8 10 20m

SCALE 1:200 AT A1

This document must not be copied without PTA's written permission, and the contents thereof must not be imparted to a third party nor be used for any unauthorised purpose.

aurecon

www.aurecongroup.com

505695-0000-DRG-ST-1911

REFERENCES

SCALE : 1 : 1 (@ A1)

DATUM :
HORIZONTAL: PCG94
VERTICAL: AHD71

PTA ACCEPTANCE STAMP

DESIGNED J.SPANO
DRAWN A.DAWSON
CHECKED M.PEARCE
APPROVED FOR ISSUE G.BENTLEY
DATE

Government of Western Australia Public Transport Authority

DETAILED DESIGN FOR THE BELLEVUE DEPOT

HV TESTING FACILITY
STRUCTURAL
3D IMAGE - SHEET 2 OF 7 - OVERALL BUILDING

PTA Drawing No: 12-A-152-ST0291 REV : 0

Plot Date: 10/1/2019 9:26:37 AM Office: Filename: BIM 360://505695 - Bellevue Depot/505695-ST-BELLEVUE DEPOT-02B.rvt

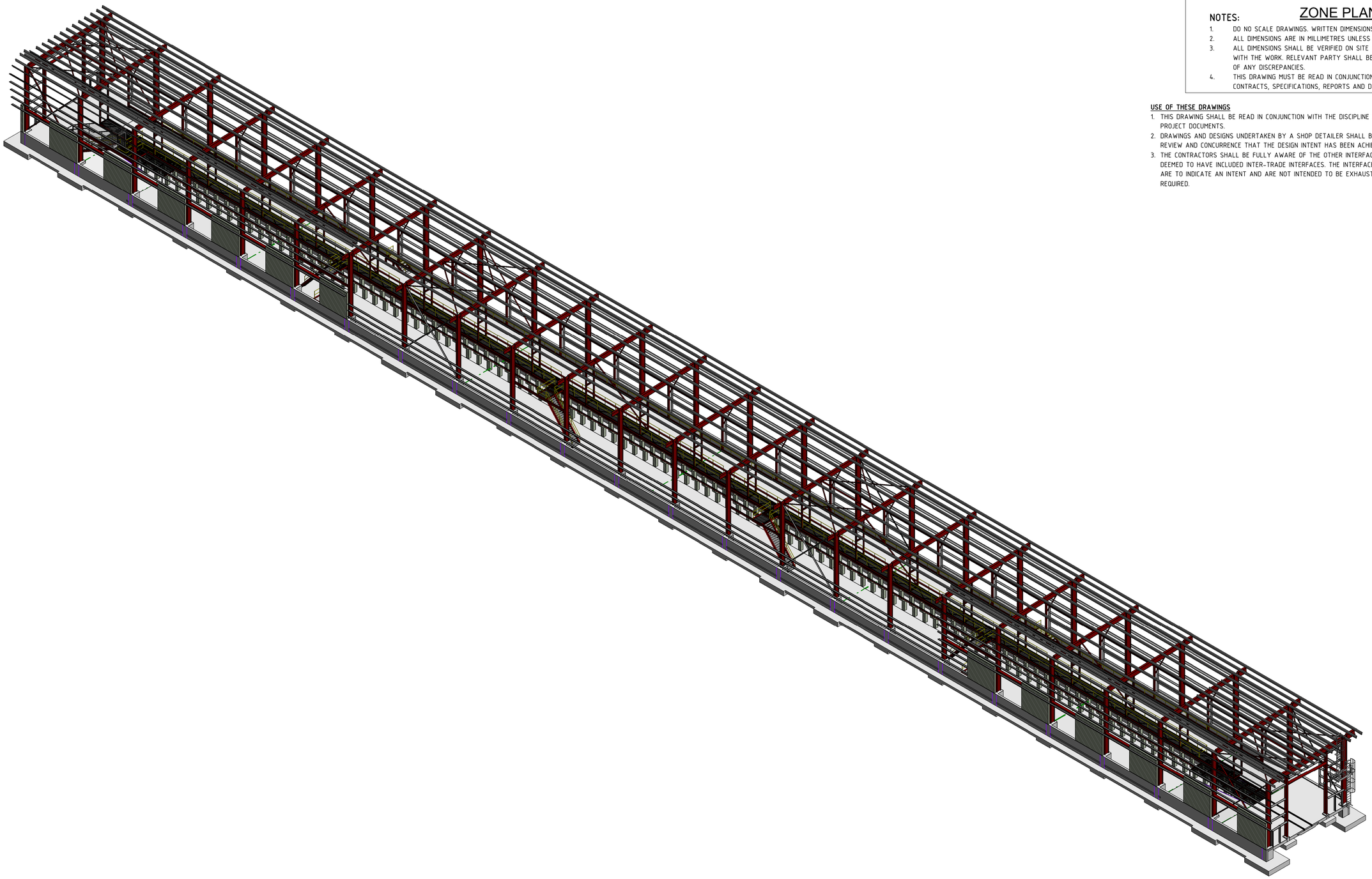

ZONE PLAN

NOTES:

1. DO NO SCALE DRAWINGS. WRITTEN DIMENSIONS GOVERN.
2. ALL DIMENSIONS ARE IN MILLIMETRES UNLESS NOTED OTHERWISE
3. ALL DIMENSIONS SHALL BE VERIFIED ON SITE BEFORE PROCEEDING WITH THE WORK. RELEVANT PARTY SHALL BE NOTIFIED IN WRITING OF ANY DISCREPANCIES.
4. THIS DRAWING MUST BE READ IN CONJUNCTION WITH ALL RELEVANT CONTRACTS, SPECIFICATIONS, REPORTS AND DRAWINGS.

USE OF THESE DRAWINGS

1. THIS DRAWING SHALL BE READ IN CONJUNCTION WITH THE DISCIPLINE CONTRACT SPECIFICATION AND OTHER PROJECT DOCUMENTS.
2. DRAWINGS AND DESIGNS UNDERTAKEN BY A SHOP DETAILER SHALL BE PRESENTED TO THE PTA FOR REVIEW AND CONCURRENCE THAT THE DESIGN INTENT HAS BEEN ACHIEVED.
3. THE CONTRACTORS SHALL BE FULLY AWARE OF THE OTHER INTERFACING PACKAGES AND SHALL HAVE DEEMED TO HAVE INCLUDED INTER-TRADE INTERFACES. THE INTERFACES IDENTIFIED IN THE DOCUMENTATION ARE TO INDICATE AN INTENT AND ARE NOT INTENDED TO BE EXHAUSTIVE. MAKE ALLOWANCES AS REQUIRED.

ISSUED FOR CONSTRUCTION

REV	DATE	AMENDMENT	DSN	DRN	CHKD	APP
0	01.10.19	ISSUED FOR CONSTRUCTION	J.S.	A.C.D.	M.P.	G.B.

ORIG SIZE A1

0 2 4 6 8 10 20m

SCALE 1:200 AT A1

This document must not be copied without PTA's written permission, and the contents thereof must not be imparted to a third party nor be used for any unauthorised purpose.

aurecon

www.aurecongroup.com

505695-0000-DRG-ST-1912

REFERENCES

SCALE : 1 : 1 (@ A1)

DATUM :
HORIZONTAL: PCG94
VERTICAL: AHD71

PTA ACCEPTANCE STAMP

DESIGNED J.SPANO
DRAWN A.DAWSON
CHECKED M.PEARCE
APPROVED FOR ISSUE G.BENTLEY
DATE

Government of Western Australia Public Transport Authority

DETAILED DESIGN FOR THE BELLEVUE DEPOT

HV TESTING FACILITY
STRUCTURAL
3D IMAGE - SHEET 3 OF 7 - OVERALL BUILDING

PTA Drawing No: 12-A-152-ST0292 REV : 0

Plot Date: 10/1/2019 9:26:43 AM Office: Filename: BIM 360://505695 - Bellevue Depot/505695-ST-BELLEVUE DEPOT-02B.rvt

ZONE 01

ZONE PLAN

NOTES:

1. DO NO SCALE DRAWINGS. WRITTEN DIMENSIONS GOVERN.
2. ALL DIMENSIONS ARE IN MILLIMETRES UNLESS NOTED OTHERWISE
3. ALL DIMENSIONS SHALL BE VERIFIED ON SITE BEFORE PROCEEDING WITH THE WORK. RELEVANT PARTY SHALL BE NOTIFIED IN WRITING OF ANY DISCREPANCIES.
4. THIS DRAWING MUST BE READ IN CONJUNCTION WITH ALL RELEVANT CONTRACTS, SPECIFICATIONS, REPORTS AND DRAWINGS.

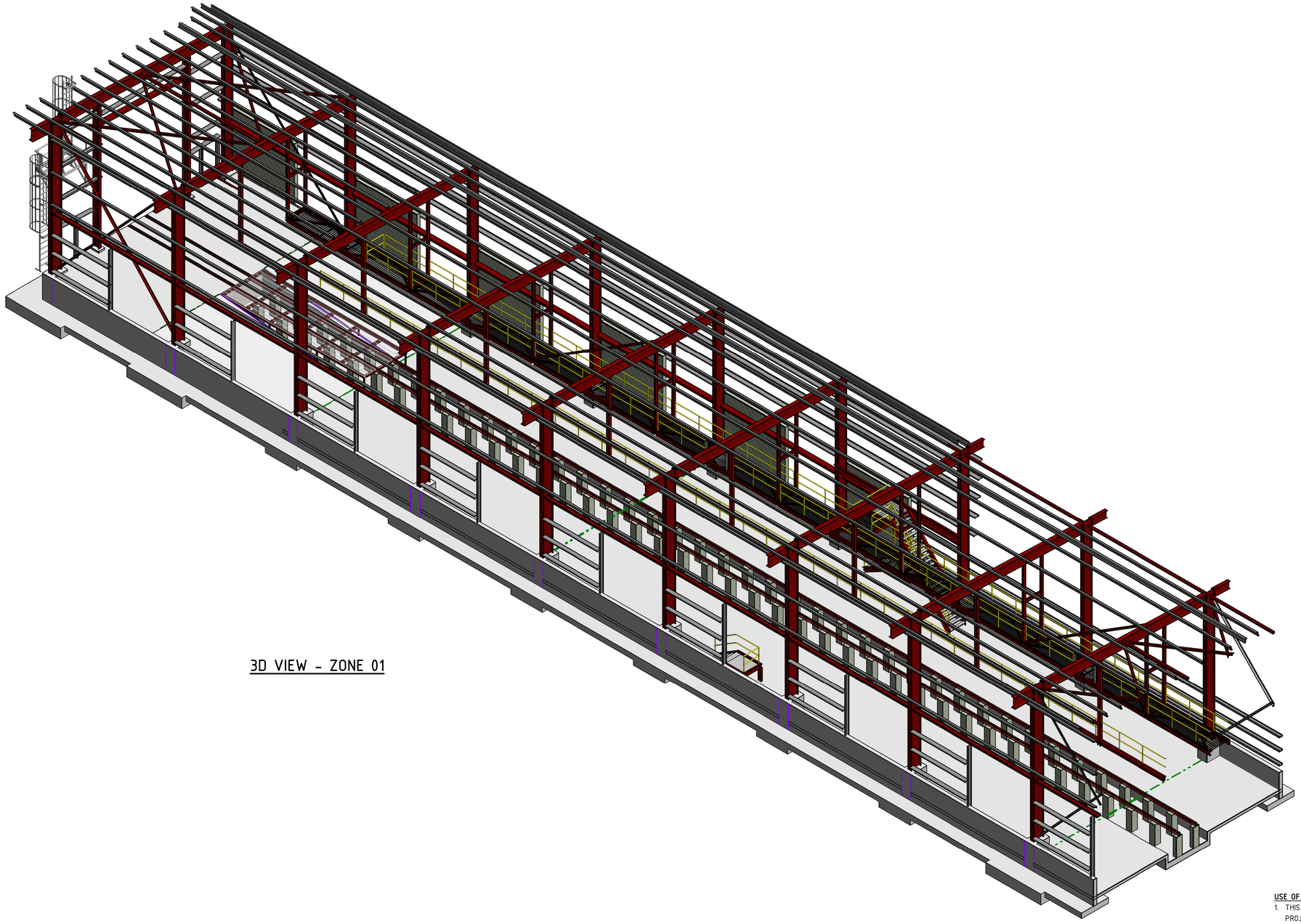

3D VIEW - ZONE 01

USE OF THESE DRAWINGS

1. THIS DRAWING SHALL BE READ IN CONJUNCTION WITH THE DISCIPLINE CONTRACT SPECIFICATION AND OTHER PROJECT DOCUMENTS.
2. DRAWINGS AND DESIGNS UNDERTAKEN BY A SHOP DETAILER SHALL BE PRESENTED TO THE PTA FOR REVIEW AND CONCURRENCE THAT THE DESIGN INTENT HAS BEEN ACHIEVED.
3. THE CONTRACTORS SHALL BE FULLY AWARE OF THE OTHER INTERFACING PACKAGES AND SHALL HAVE DEEMED TO HAVE INCLUDED INTER-TRADE INTERFACES. THE INTERFACES IDENTIFIED IN THE DOCUMENTATION ARE TO INDICATE AN INTENT AND ARE NOT INTENDED TO BE EXHAUSTIVE. MAKE ALLOWANCES AS REQUIRED.

ISSUED FOR CONSTRUCTION

REV	DATE	AMENDMENT	DSN	DRN	CHKD	APP
0	01.10.19	ISSUED FOR CONSTRUCTION	J.S.	A.C.D.	M.P.	G.B.

ORIG SIZE A1

0 1 2 3 4 5 10m

SCALE 1:100 AT A1

This document must not be copied without PTA's written permission, and the contents thereof must not be imparted to a third party nor be used for any unauthorised purpose.

aurecon

www.aurecongroup.com

505695-0000-DRG-ST-1913

REFERENCES

SCALE : 1 : 1 (@ A1)

DATUM :
HORIZONTAL: PCG94
VERTICAL: AHD71

PTA ACCEPTANCE STAMP

DESIGNED J.SPANO
DRAWN A.DAWSON
CHECKED M.PEARCE
APPROVED FOR ISSUE
G.BENTLEY
DATE

Government of Western Australia Public Transport Authority

DETAILED DESIGN FOR THE BELLEVUE DEPOT

HV TESTING FACILITY
STRUCTURAL
3D IMAGE - SHEET 4 OF 7 - ZONE 01

PTA Drawing No: 12-A-152-ST0293 REV : 0

Plot Date: 10/1/2019 9:26:47 AM Office: Filename: BIM 360://505695 - Bellevue Depot/505695-ST-BELLEVUE DEPOT-02B.rvt

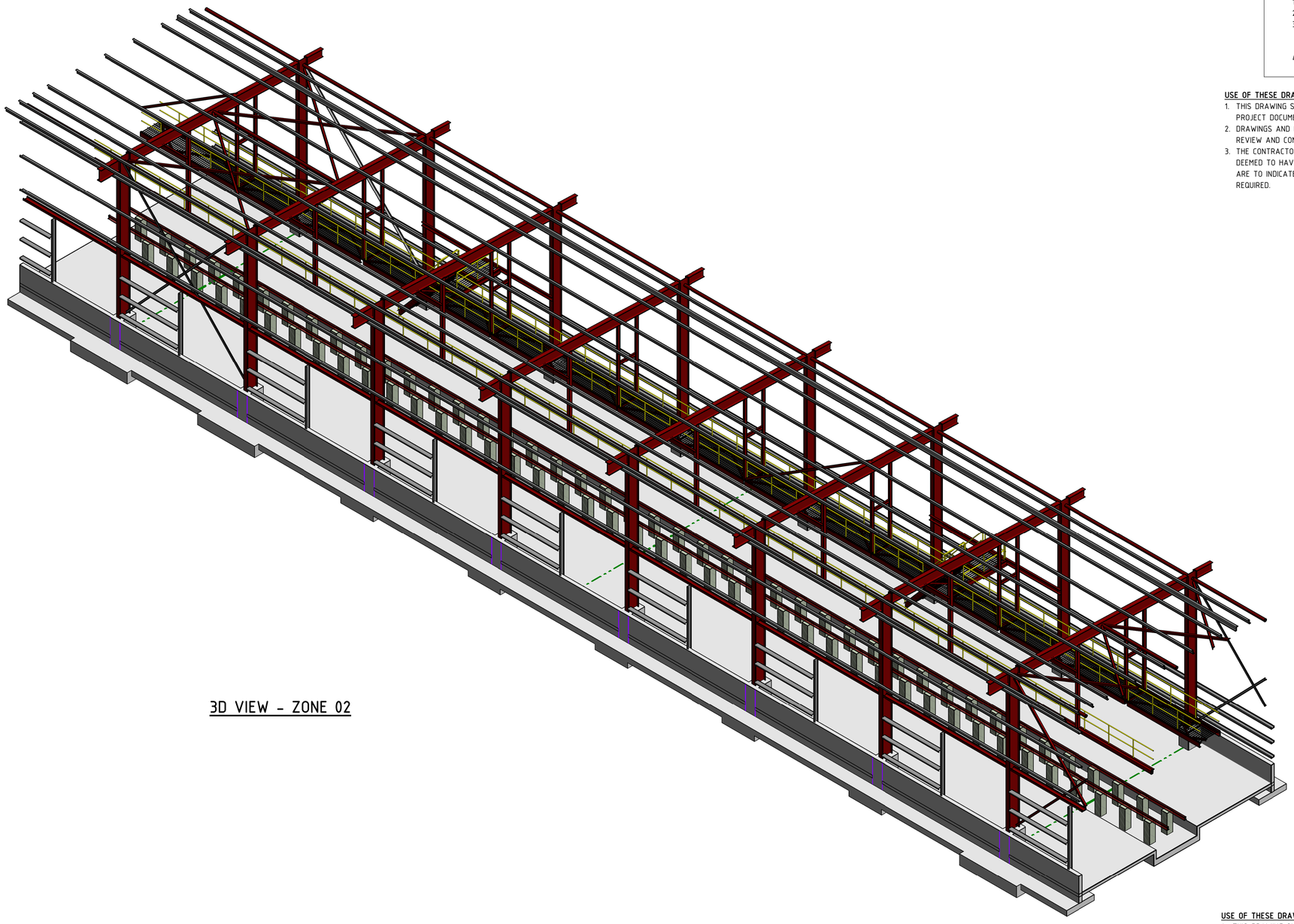

3D VIEW - ZONE 02

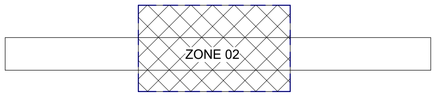

ZONE PLAN

NOTES:

1. DO NO SCALE DRAWINGS. WRITTEN DIMENSIONS GOVERN.
2. ALL DIMENSIONS ARE IN MILLIMETRES UNLESS NOTED OTHERWISE
3. ALL DIMENSIONS SHALL BE VERIFIED ON SITE BEFORE PROCEEDING WITH THE WORK. RELEVANT PARTY SHALL BE NOTIFIED IN WRITING OF ANY DISCREPANCIES.
4. THIS DRAWING MUST BE READ IN CONJUNCTION WITH ALL RELEVANT CONTRACTS, SPECIFICATIONS, REPORTS AND DRAWINGS.

USE OF THESE DRAWINGS

1. THIS DRAWING SHALL BE READ IN CONJUNCTION WITH THE DISCIPLINE CONTRACT SPECIFICATION AND OTHER PROJECT DOCUMENTS.
2. DRAWINGS AND DESIGNS UNDERTAKEN BY A SHOP DETAILER SHALL BE PRESENTED TO THE PTA FOR REVIEW AND CONCURRENCE THAT THE DESIGN INTENT HAS BEEN ACHIEVED.
3. THE CONTRACTORS SHALL BE FULLY AWARE OF THE OTHER INTERFACING PACKAGES AND SHALL HAVE DEEMED TO HAVE INCLUDED INTER-TRADE INTERFACES. THE INTERFACES IDENTIFIED IN THE DOCUMENTATION ARE TO INDICATE AN INTENT AND ARE NOT INTENDED TO BE EXHAUSTIVE. MAKE ALLOWANCES AS REQUIRED.

USE OF THESE DRAWINGS

1. THIS DRAWING SHALL BE READ IN CONJUNCTION WITH THE DISCIPLINE CONTRACT SPECIFICATION AND OTHER PROJECT DOCUMENTS.
2. DRAWINGS AND DESIGNS UNDERTAKEN BY A SHOP DETAILER SHALL BE PRESENTED TO THE PTA FOR REVIEW AND CONCURRENCE THAT THE DESIGN INTENT HAS BEEN ACHIEVED.
3. THE CONTRACTORS SHALL BE FULLY AWARE OF THE OTHER INTERFACING PACKAGES AND SHALL HAVE DEEMED TO HAVE INCLUDED INTER-TRADE INTERFACES. THE INTERFACES IDENTIFIED IN THE DOCUMENTATION ARE TO INDICATE AN INTENT AND ARE NOT INTENDED TO BE EXHAUSTIVE. MAKE ALLOWANCES AS REQUIRED.

ISSUED FOR CONSTRUCTION

REV	DATE	AMENDMENT	DSN	DRN	CHKD	APP
0	01.10.19	ISSUED FOR CONSTRUCTION	J.S.	A.C.D.	M.P.	G.B.

ORIG SIZE A1

0 1 2 3 4 5 10m

SCALE 1:100 AT A1

This document must not be copied without PTA's written permission, and the contents thereof must not be imparted to a third party nor be used for any unauthorised purpose.

aurecon

www.aurecongroup.com

REFERENCES

SCALE : 1 : 1 (@ A1)

DATUM :
HORIZONTAL: PCG94
VERTICAL: AHD71

PTA ACCEPTANCE STAMP

DESIGNED J.SPANO
DRAWN A.DAWSON
CHECKED M.PEARCE
APPROVED FOR ISSUE
G.BENTLEY
DATE

Government of Western Australia Public Transport Authority

DETAILED DESIGN FOR THE BELLEVUE DEPOT

HV TESTING FACILITY
STRUCTURAL
3D IMAGE - SHEET 5 OF 7 - ZONE 02

PTA Drawing No: 12-A-152-ST0294 REV : 0

Plot Date: 10/1/2019 9:26:51 AM Office: Filename: BIM 360://505695 - Bellevue Depot/505695-ST-BELLEVUE DEPOT-02B.rvt

ZONE 03

ZONE PLAN

NOTES:

1. DO NO SCALE DRAWINGS. WRITTEN DIMENSIONS GOVERN.
2. ALL DIMENSIONS ARE IN MILLIMETRES UNLESS NOTED OTHERWISE
3. ALL DIMENSIONS SHALL BE VERIFIED ON SITE BEFORE PROCEEDING WITH THE WORK. RELEVANT PARTY SHALL BE NOTIFIED IN WRITING OF ANY DISCREPANCIES.
4. THIS DRAWING MUST BE READ IN CONJUNCTION WITH ALL RELEVANT CONTRACTS, SPECIFICATIONS, REPORTS AND DRAWINGS.

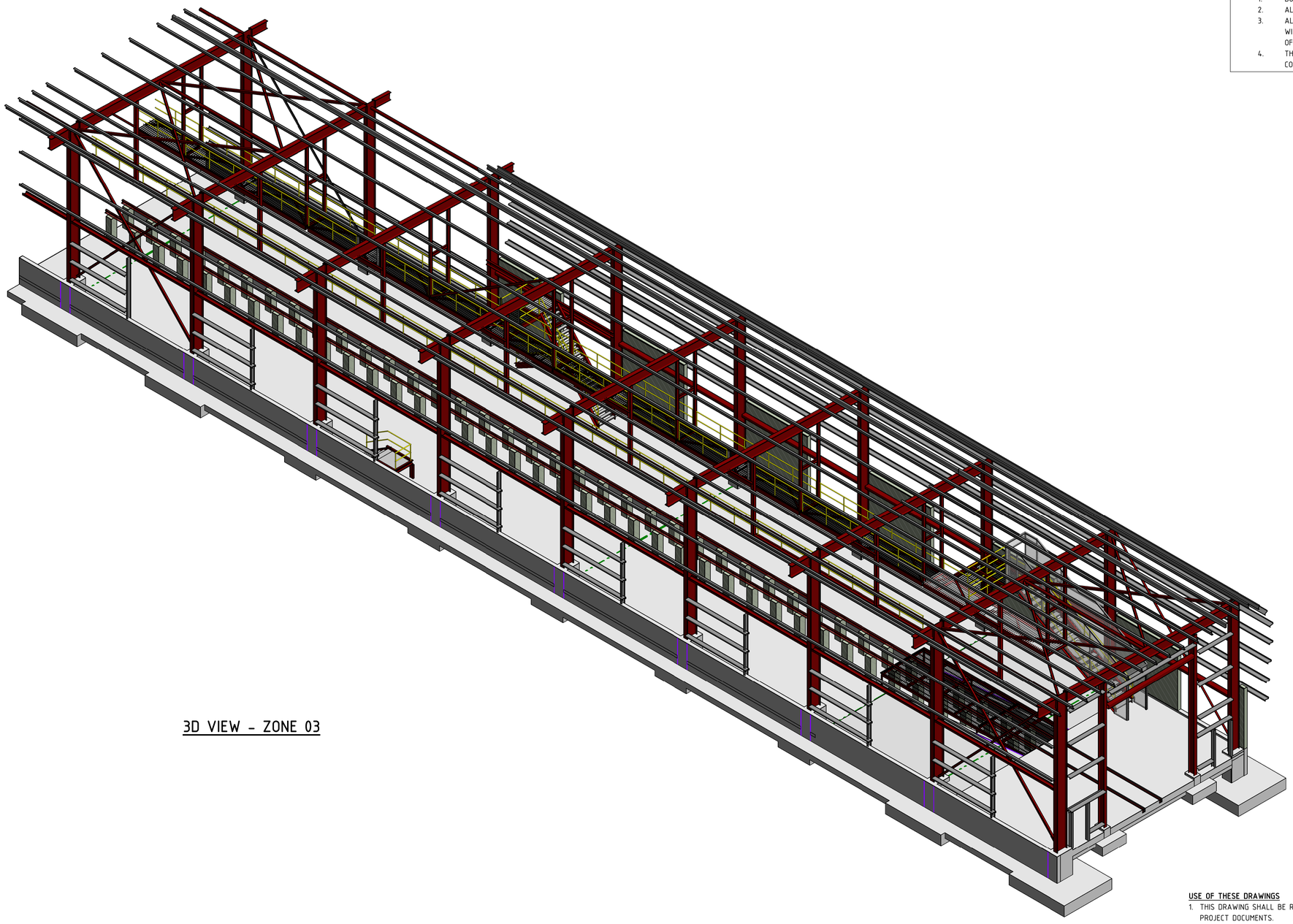

3D VIEW - ZONE 03

USE OF THESE DRAWINGS

1. THIS DRAWING SHALL BE READ IN CONJUNCTION WITH THE DISCIPLINE CONTRACT SPECIFICATION AND OTHER PROJECT DOCUMENTS.
2. DRAWINGS AND DESIGNS UNDERTAKEN BY A SHOP DETAILER SHALL BE PRESENTED TO THE PTA FOR REVIEW AND CONCURRENCE THAT THE DESIGN INTENT HAS BEEN ACHIEVED.
3. THE CONTRACTORS SHALL BE FULLY AWARE OF THE OTHER INTERFACING PACKAGES AND SHALL HAVE DEEMED TO HAVE INCLUDED INTER-TRADE INTERFACES. THE INTERFACES IDENTIFIED IN THE DOCUMENTATION ARE TO INDICATE AN INTENT AND ARE NOT INTENDED TO BE EXHAUSTIVE. MAKE ALLOWANCES AS REQUIRED.

ISSUED FOR CONSTRUCTION

REV	DATE	AMENDMENT	DSN	DRN	CHKD	APP
0	01.10.19	ISSUED FOR CONSTRUCTION	J.S.	A.C.D.	M.P.	G.B.

ORIG SIZE A1

0 1 2 3 4 5 10m

SCALE 1:100 AT A1

This document must not be copied without PTA's written permission, and the contents thereof must not be imparted to a third party nor be used for any unauthorised purpose.

aurecon

www.aurecongroup.com

505695-0000-DRG-ST-1914

REFERENCES

SCALE : 1 : 1 (@ A1)

DATUM :
HORIZONTAL: PCG94
VERTICAL: AHD71

PTA ACCEPTANCE STAMP

DESIGNED J.SPANO
DRAWN A.DAWSON
CHECKED M.PEARCE
APPROVED FOR ISSUE G.BENTLEY
DATE

Government of Western Australia Public Transport Authority

DETAILED DESIGN FOR THE BELLEVUE DEPOT

HV TESTING FACILITY
STRUCTURAL
3D IMAGE - SHEET 6 OF 7 - ZONE 03

PTA Drawing No: 12-A-152-ST0295 REV : 0

USE OF THESE DRAWINGS

1. THIS DRAWING SHALL BE READ IN CONJUNCTION WITH THE DISCIPLINE CONTRACT SPECIFICATION AND OTHER PROJECT DOCUMENTS.
2. DRAWINGS AND DESIGNS UNDERTAKEN BY A SHOP DETAILER SHALL BE PRESENTED TO THE PTA FOR REVIEW AND CONCURRENCE THAT THE DESIGN INTENT HAS BEEN ACHIEVED.
3. THE CONTRACTORS SHALL BE FULLY AWARE OF THE OTHER INTERFACING PACKAGES AND SHALL HAVE DEEMED TO HAVE INCLUDED INTER-TRADE INTERFACES. THE INTERFACES IDENTIFIED IN THE DOCUMENTATION ARE TO INDICATE AN INTENT AND ARE NOT INTENDED TO BE EXHAUSTIVE. MAKE ALLOWANCES AS REQUIRED.

ZONE PLAN

NOTES:

1. DO NO SCALE DRAWINGS. WRITTEN DIMENSIONS GOVERN.
2. ALL DIMENSIONS ARE IN MILLIMETRES UNLESS NOTED OTHERWISE
3. ALL DIMENSIONS SHALL BE VERIFIED ON SITE BEFORE PROCEEDING WITH THE WORK. RELEVANT PARTY SHALL BE NOTIFIED IN WRITING OF ANY DISCREPANCIES.
4. THIS DRAWING MUST BE READ IN CONJUNCTION WITH ALL RELEVANT CONTRACTS, SPECIFICATIONS, REPORTS AND DRAWINGS.

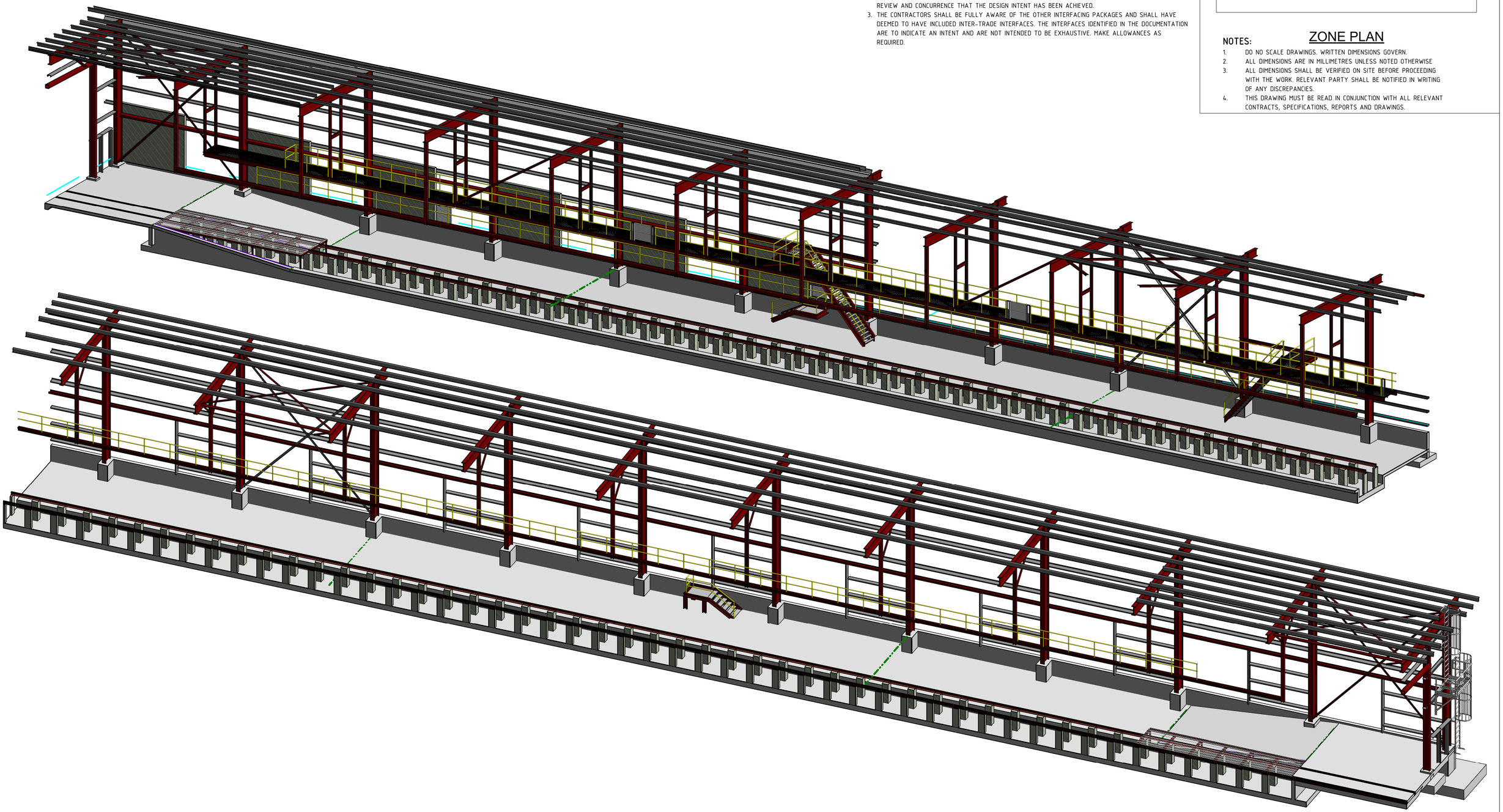

ISSUED FOR CONSTRUCTION

REV	DATE	AMENDMENT	DSN	DRN	CHKD	APP
0	01.10.19	ISSUED FOR CONSTRUCTION	J.S.	A.C.D.	M.P.	G.B.

ORIG SIZE A1

0 1 2 3 4 5 10m

SCALE 1:100 AT A1

This document must not be copied without PTA's written permission, and the contents thereof must not be imparted to a third party nor be used for any unauthorised purpose.

aurecon

www.aurecongroup.com

505695-0000-DRG-ST-1915

REFERENCES

SCALE : 1 : 1 (@ A1)

DATUM :
HORIZONTAL: PCG94
VERTICAL: AHD71

PTA ACCEPTANCE STAMP

DESIGNED J.SPANO
DRAWN A.DAWSON
CHECKED M.PEARCE
APPROVED FOR ISSUE G.BENTLEY
DATE

Government of Western Australia Public Transport Authority

DETAILED DESIGN FOR THE BELLEVUE DEPOT

HV TESTING FACILITY
STRUCTURAL
3D IMAGE - SHEET 7 OF 7 - SECTIONS

PTA Drawing No: 12-A-152-ST0296 REV : 0

Plot Date: 10/1/2019 9:23:03 AM Office: PERTH Filename: BIM 360://505695 - Bellevue Depot/505695-ST-BELLEVUE DEPOT-02B.rvt