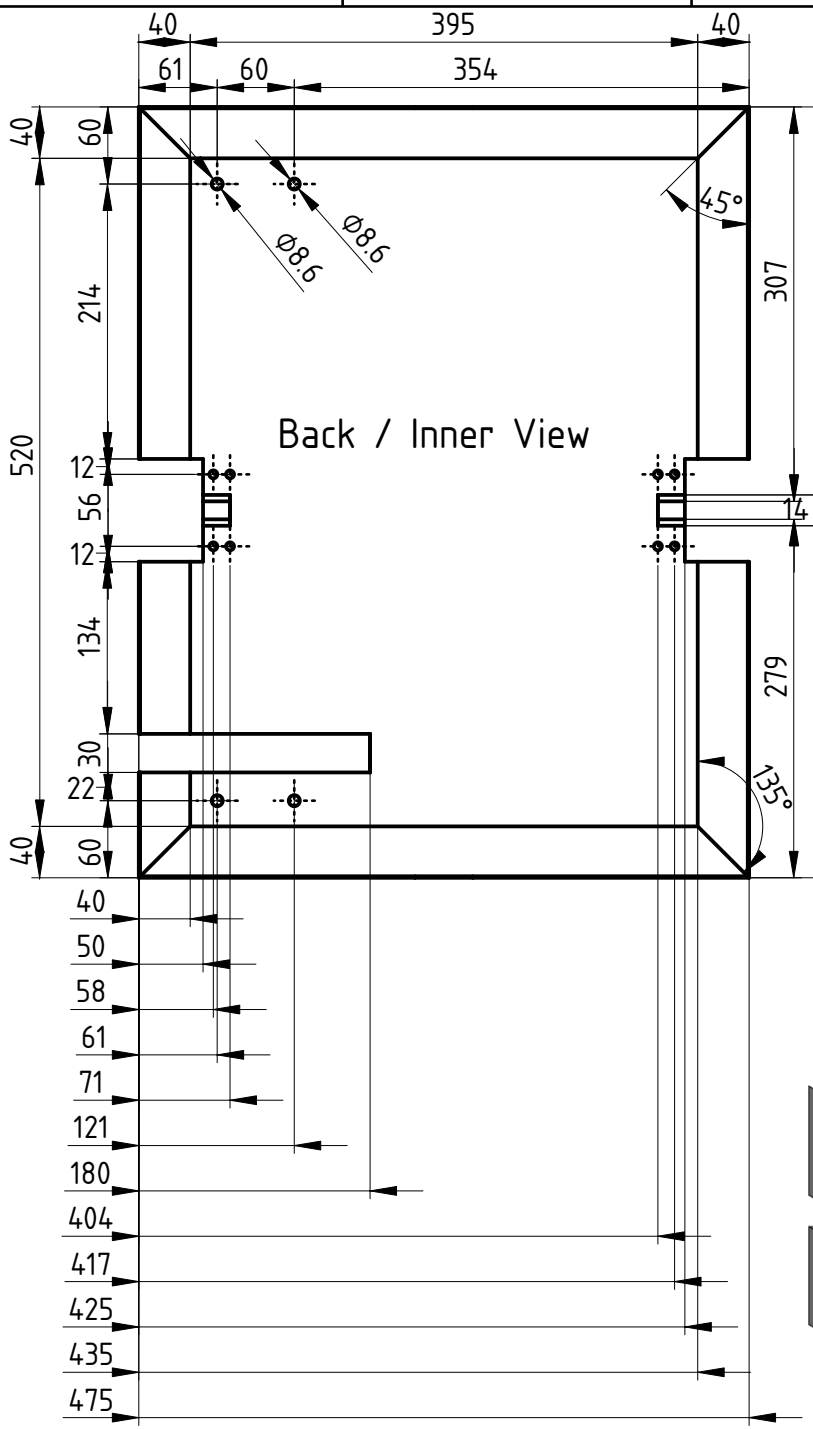

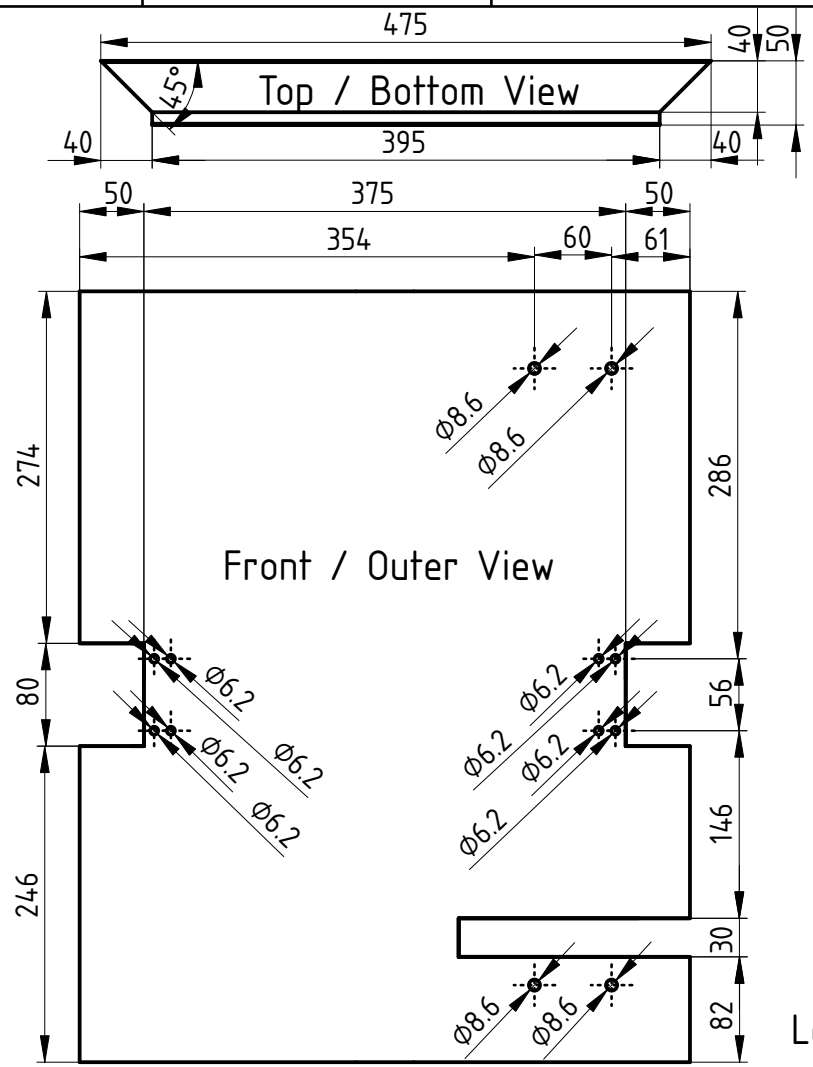

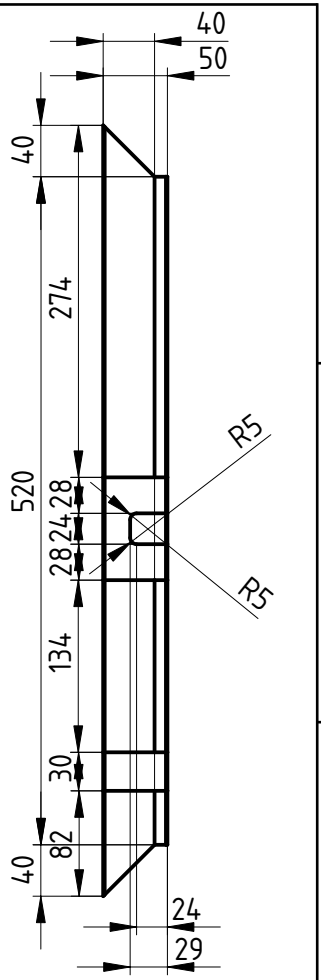

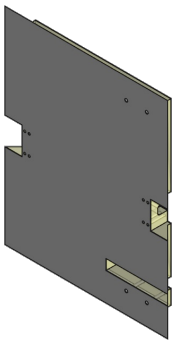

DESIGNED BY: Vagelis Gkougkousis DATE: August 2024		Box Door SPS Cold Box Door	
SIZE A4		Material: CoraPan Al 85	
SCALE 1:6	WEIGHT (kg) 0.923	DRAWING NUMBER 7 / 33	SHEET 1 / 1

This drawing is our property; it can't be reproduced or communicated without our written consent.