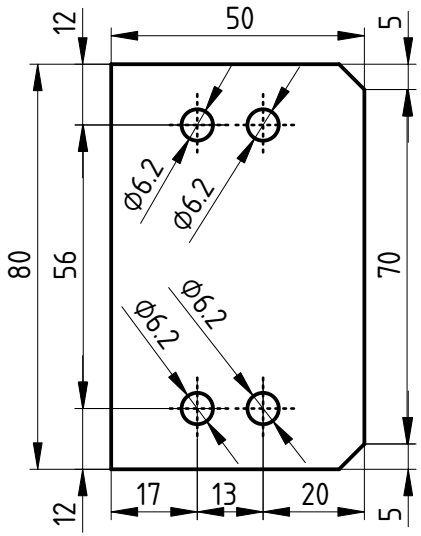

Front View

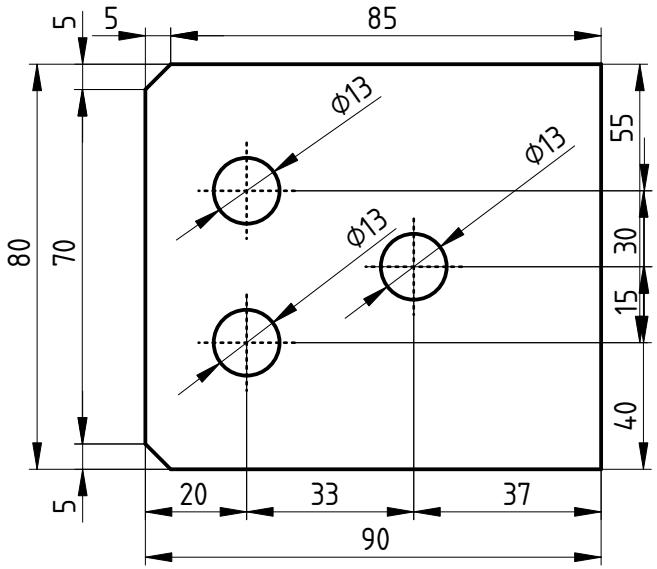

Outer Side View

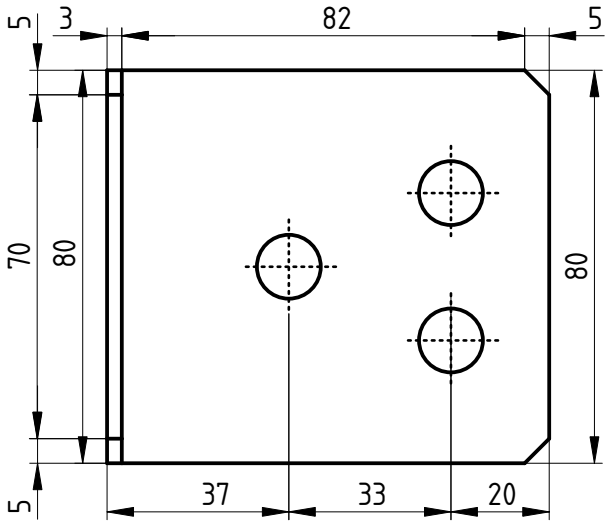

Inner Side View

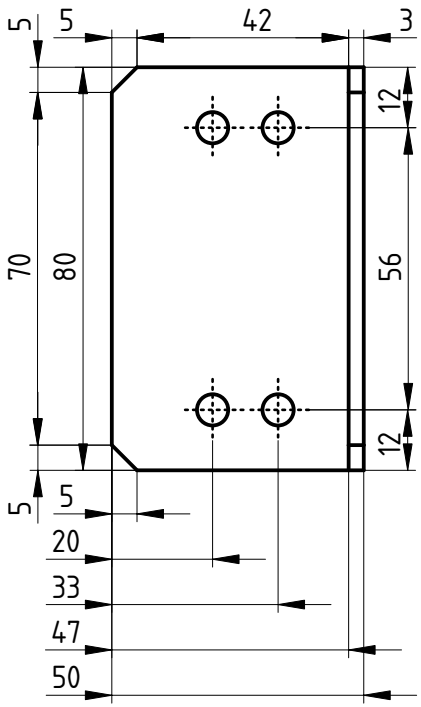

Back View

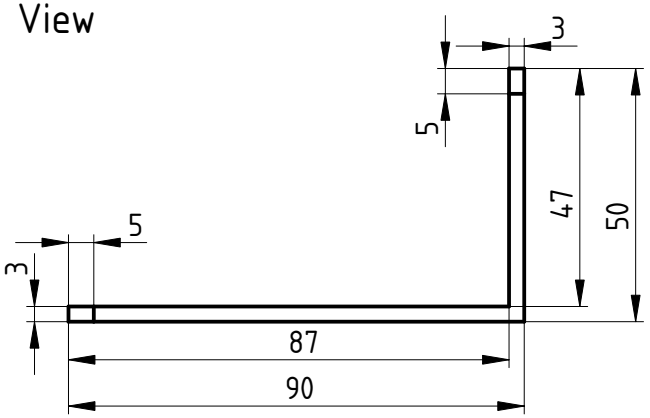

Top / Bottom View

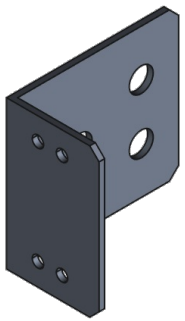

DESIGNED BY: Vagelis Gkougkousis DATE: August 2024		**Box-Side Handle Frame** SPS Cold Box Door Latch Support Frame		
SIZE A4		Material: 3mm Stainless Steel Sheet		
SCALE 2:3	WEIGHT (kg) 0.249	DRAWING NUMBER 10 / 33	SHEET 1 / 1	

This drawing is our property; it can't be reproduced or communicated without our written consent.