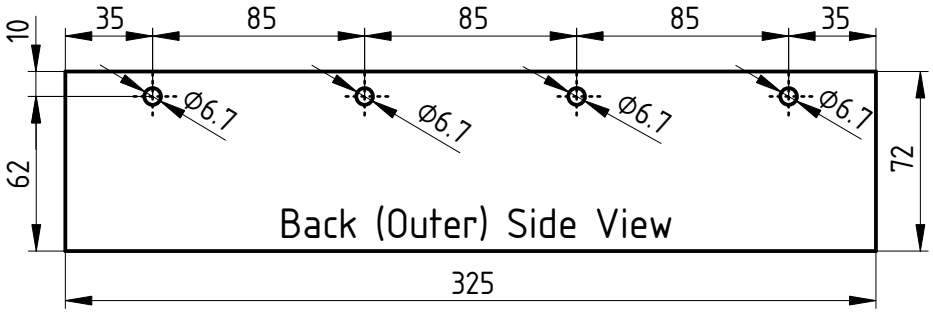

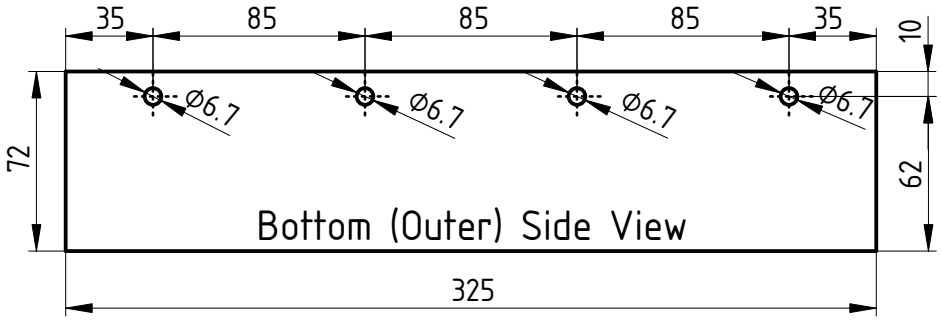

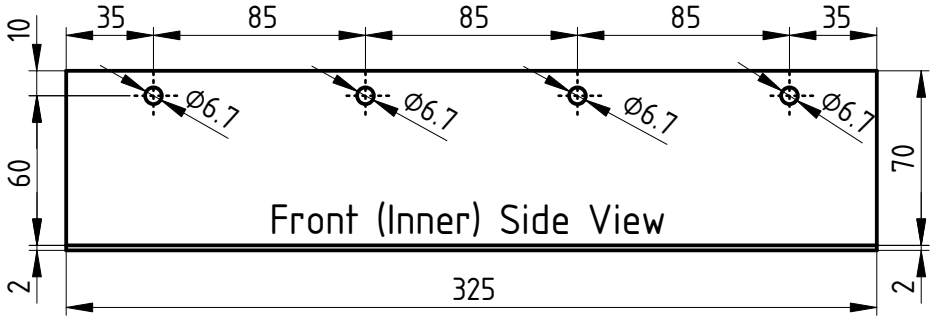

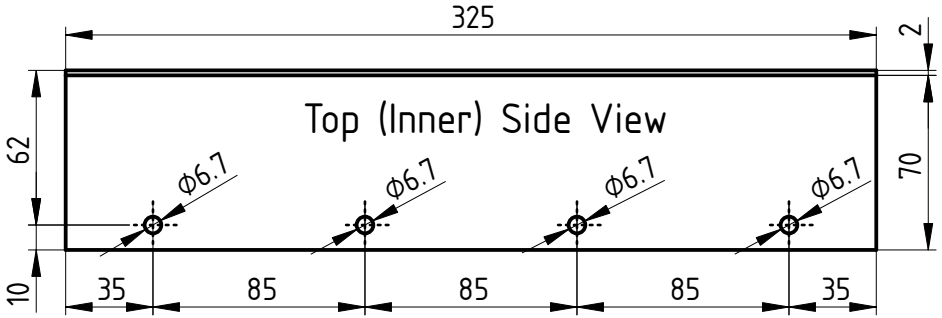

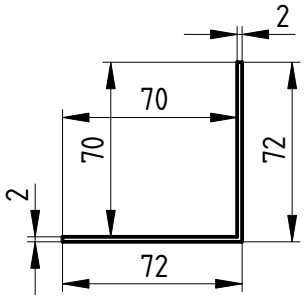

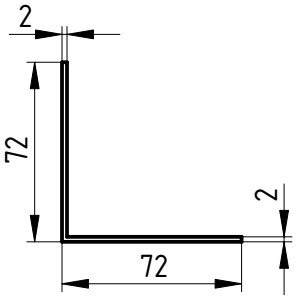

DESIGNED BY: Vagelis Gkougkousis DATE: August 2024		**Bottom Back Stiffener Plate** SPS Cold Box External Stiffener - Bottom Back	
SIZE A4		Material: 2 mm Stainless Steel Sheet	
SCALE 1:3	WEIGHT (kg) 0.734	DRAWING NUMBER 23 / 33	SHEET 1 / 1

This drawing is our property; it can't be reproduced or communicated without our written consent.