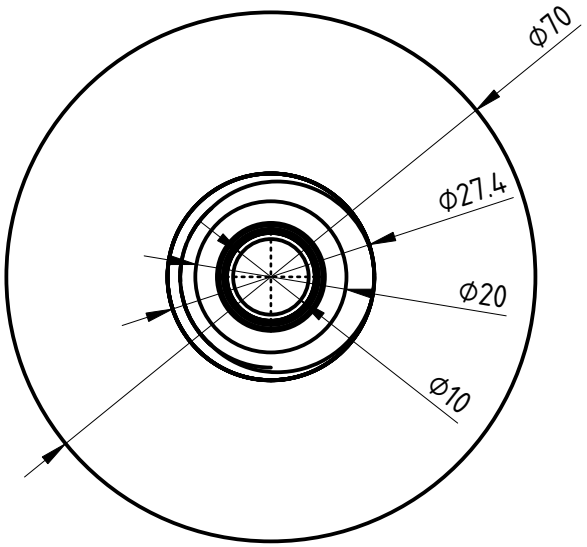

Back / Outer View

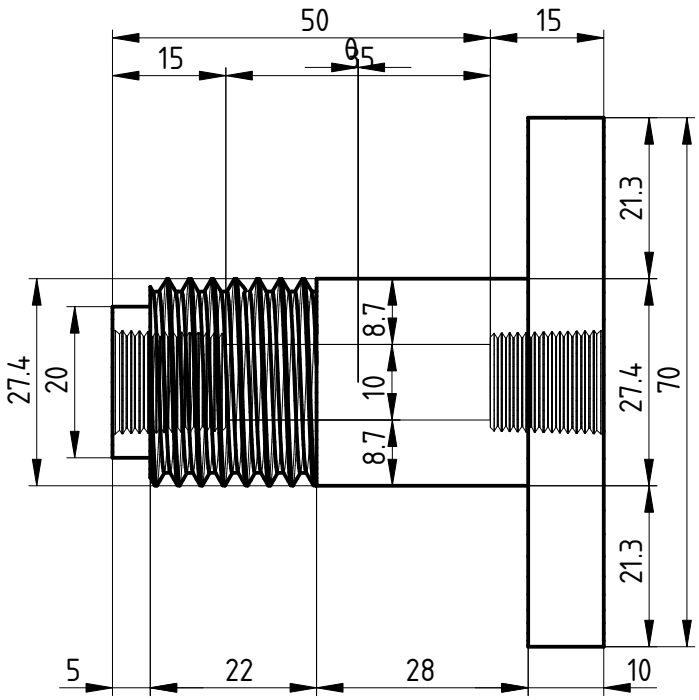

Default Text

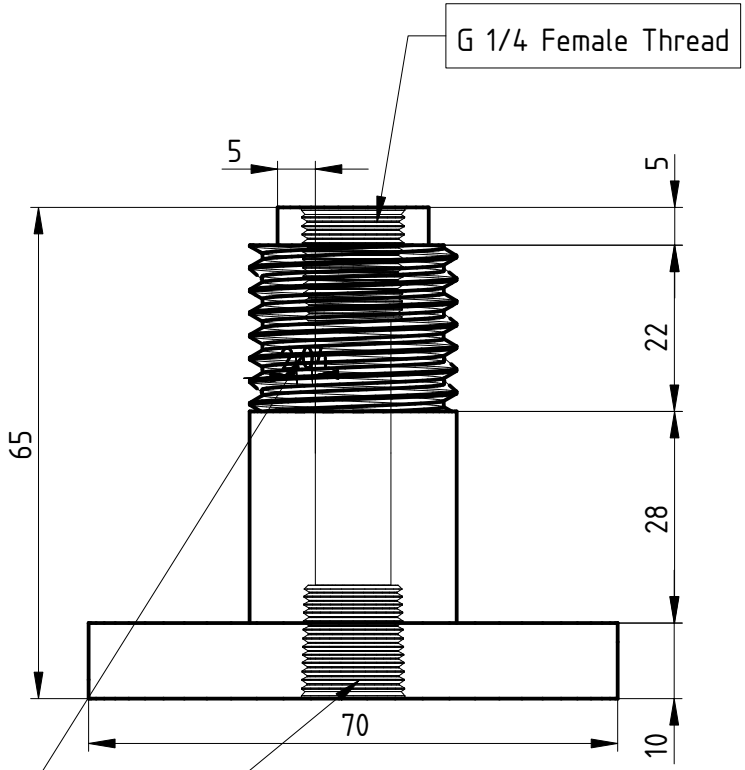

Default Text

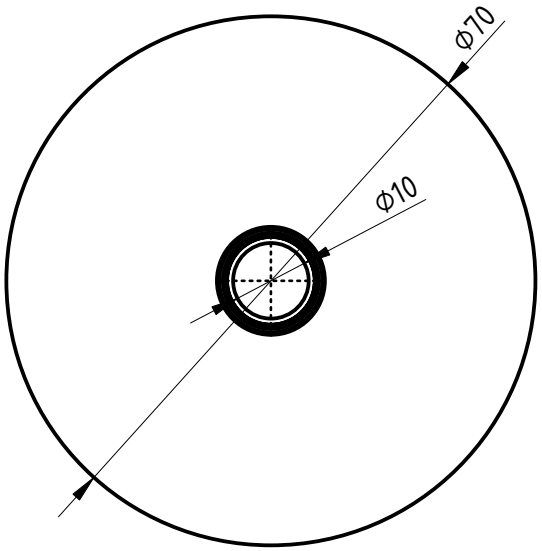

Front / Inner View

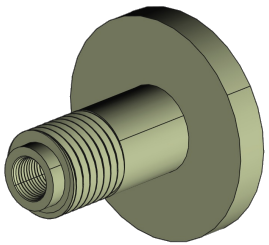

DESIGNED BY: Vagelis Gkougkousis DATE: August 2024		Cooling Passthrough Inner R Cold Box Cooling Loop Inner Right Passthough	
SIZE A4		Material: TECAPEEK ELS 70 mm Rod	
SCALE 1:1	WEIGHT (kg) 0.083	DRAWING NUMBER 26 / 33	SHEET 1 / 1

This drawing is our property; it can't be reproduced or communicated without our written consent.

G	_
F	_
E	_
D	_
C	_
B	_
A	_