(English)

DM-RAGN010-02

Dealer's Manual

ROAD	MTB	Trekking
City Touring/ Comfort Bike	URBAN SPORT	E-BIKE

ROAD Di2 Series General Guide

Contents

IMPORTANT NOTICE **3**
TO ENSURE SAFETY **4**
About this manual **8**
Booklet structure **9**
Workflow overview **10**
List of tools to be used **12**
Installation / removal **13**
Introduction 13
Overall wiring diagram 13
Wiring diagram around the cockpit 16
Pairing 20
Connection and communication with devices 20
Maintenance 20
Electric wires 21
Checking connections 29
Troubleshooting **31**
When a problem occurs 31

IMPORTANT NOTICE

- This dealer's manual is intended primarily for use by professional bicycle mechanics.
  Users who are not professionally trained for bicycle assembly should not attempt to install the components themselves using the dealer's manuals.
  If any part of the information on the manual is unclear to you, do not proceed with the installation. Instead, contact your place of purchase or a distributor for assistance.
- Make sure to read all manuals included with each product.
- Do not disassemble or modify the product other than as stated in the information contained in this dealer's manual.
- All manuals and technical documents are accessible online at https://si.shimano.com .
- For consumers who do not have easy access to the internet, please contact a SHIMANO distributor or any of the SHIMANO offices to obtain a hardcopy of the user's manual.
- Please observe the appropriate rules and regulations of the country, state or region in which you conduct your business as a dealer.
- The Bluetooth ® word mark and logos are registered trademarks owned by the Bluetooth SIG, Inc. and any use of such marks by SHIMANO INC. is under license.
  Other trademarks and trade names are those of their respective owners.
- ANT and ANT+ are trademarks or registered trademarks of ANT Wireless.

For safety, be sure to read this dealer's manual thoroughly before use, and follow it for correct use.

The following instructions must be observed at all times in order to prevent personal injury and physical damage to equipment and surroundings.
The instructions are classified according to the degree of danger or damage which may occur if the product is used incorrectly.

DANGER	Failure to follow the instructions will result in death or serious injury.
WARNING	Failure to follow the instructions could result in death or serious injury.
CAUTION	Failure to follow the instructions could cause personal injury or physical damage to equipment and surroundings.

TO ENSURE SAFETY

⚠ WARNING

- Be sure to follow the instructions provided in the manuals when installing the product.
  Only use SHIMANO genuine parts. If a component or replacement part is incorrectly assembled or adjusted, it can lead to component failure and cause the rider to lose control and crash.
- Wear approved eye protection while performing maintenance tasks such as replacing components.

Be sure to also inform users of the following:

- Clean the chain and QUICK-LINK with an appropriate chain cleaner regularly. Intervals between maintenance depend on the use and riding circumstances. Never use alkali- or acid-based solvents such as rust cleaners. If those solvents are used the chain or QUICK-LINK might break and cause serious injury.
- Check that the wheels are fastened securely before riding the bicycle. Using the axle release lever incorrectly may cause the wheel to fall off, etc. and lead to serious injury due to a fall or collision.
- Check the chain for any damage (deformation or cracking), skipping, or other abnormalities such as unintended gear shifting. If any problems are found, consult your place of purchase or a distributor. The chain may break, and you may fall.
- Be careful not to let the hemming of your clothes get caught in the chain while riding. Otherwise, you may fall off the bicycle.

For installation to the bicycle and maintenance

- When operating the shift switch, be careful not to allow your fingers to be caught in the derailleur. The motor in the derailleur is powerful enough to be operated without stopping until the shifting position is reached, and may cause serious injury if your fingers interfere with the shifting motion.

NOTICE

Be sure to also inform users of the following:

- The connectors are small and waterproof, so do not connect and disconnect electric wires except when necessary. Doing so may impair the waterproofing.
- Be careful not to get water into the connection terminals of the E-TUBE ports.
- The components are designed to be fully waterproofed to withstand wet weather riding conditions; however, do not deliberately place them into water.
- Do not clean the bicycle in a high-pressure wash. If water gets into any of the components, operating problems or rusting may result.
- Be sure to keep rotating the crank arm during gear shifting operations.
- Handle the components carefully, and avoid subjecting them to strong shock.
- Do not use the thinners or harsh solvents to clean the products. Such solvents may damage the surface. When cleaning the products, use a cloth moistened with a neutral detergent diluted with water.
- If gear shifting operation does not feel smooth, consult the place of purchase for assistance.
- Keep away from magnetic objects. If this is not observed, problems with operation may occur.
  When installing a product that uses a magnet, make sure the magnet is set in the specified location before installing the product.
- Contact the place of purchase for updates of the component software. The most up-to-date information is available on the SHIMANO website.
- Products are not guaranteed against natural wear and deterioration from normal use and aging.
- For maximum performance we highly recommend SHIMANO lubricants and maintenance products.

For installation to the bicycle and maintenance

- Be sure to attach dummy plugs to any unused E-TUBE ports.
- Be sure to use SHIMANO original tool TL-EW02 / TL-EW300 to remove and install the electric wires.
- Contact SHIMANO INC. for information regarding the shipment of the battery charger to South Korea and Malaysia.
- Use a brake hose/outer casing which still has some length to spare even when the handlebars are turned all the way to either side. Furthermore, check that the dual control levers do not touch the bicycle frame when the handlebars are turned all the way.
- The clamp band, clamp screw and clamp nut are not compatible with other products. Be sure to always use the clamp band, clamp screw or clamp nut which is specific to each product.

■ Electric wire

- Secure the electric wires with a zip tie so that they do not interfere with the gears or tires.

- Do not remove the wire holders which are attached to the internal type electric wires (EW-SD50-I / EW-SD300-I). The wire holders prevent the electric wires from moving inside the frame.
- When installing to the bicycle, do not forcibly bend the electric wire plug. It may result in a poor connection.
- When connecting electric wires, make sure that foreign matter does not get inside the plug or E-TUBE port. A connection with foreign matter present may result in a malfunction.
- If the plug is exposed during storage, transportation, or maintenance work, and there is a possibility of foreign matter getting inside, protect the plug with masking tape or a similar material.
- If you do not feel a click when connecting an electric wire, check that there is no foreign matter inside the plug or E-TUBE port. If foreign matter is present, use a blower to remove it. If the problem persists, replace the electric wire with a new one.

The actual product may differ from the illustration because this manual is intended mainly to explain the procedures for using the product.

For installation to the bicycle

■ Notes on reinstalling and replacing components

- When the product is reinstalled or replaced, it is automatically recognized by the system to allow operation according to the settings.
- If the component configuration changes or malfunction is observed, use E-TUBE PROJECT to update the firmware of each component to the latest version and perform a check again. Also, make sure that E-TUBE PROJECT is the latest version. If the software is not the latest version, the component compatibility or the product functions may not be available.

■ Connection and communication with PC

- PC linkage devices can be used to connect a PC to the bicycle (system or components), and E-TUBE PROJECT Professional can be used to carry out tasks such as customizing single components or the whole system and updating their firmware.
  If your version of E-TUBE PROJECT Professional and the firmware for each component are not up to date, there could be problems operating the bicycle. Check the application versions and update them to the latest ones.

	PC linkage device	E-TUBE PROJECT	Firmware
BT-DN300	SM-PCE02	Version 5.0.0 or later	Version 4.0.0 or later

■ Connection and communication with smartphone or tablet

- E-TUBE PROJECT Cyclist can be used to carry out tasks such as updating firmware and customizing single

components or the whole system, after connecting the bicycle (system or components) to a smartphone or tablet via Bluetooth ® LE.

- Disconnect the Bluetooth LE connection when not using E-TUBE PROJECT Cyclist.
  Using the rear derailleur communication function without disconnecting the Bluetooth LE connection increases battery consumption.

Compatibility with E-TUBE PROJECT

- Check the following website for information on compatibility with each component and functional limitations:
  (https://bike.shimano.com/e-tube/project.html)

About this manual

This manual is the ROAD Di2 Dealer's Manual General Guide. It provides overall wiring diagrams and explanations about installation workflow, etc.
For details on how to handle individual products (individual components), refer to the dealer's manual for each product.
Dealer's manuals can be viewed at the following link:
https://si.shimano.com

Booklet structure

ROAD Di2 series manuals are split among several booklets, as described below.

The latest manuals are available on our website (https://si.shimano.com).

Name	Details
ROAD Di2 Dealer's Manual General Guide (this manual)	The basic manual for ROAD Di2 series. It contains overall wiring diagrams and explanations about installation workflow.
Front Derailleur (Di2) Dealer's Manual FD-R9250 / FD-R8150 FD-R7150	This manual describes front derailleur installation, adjustment, and maintenance.
Di2 Battery and Parts Dealer's Manual	This manual describes Di2 battery and parts installation.
Hydraulic Disc Brake / Dual Control Lever (Di2) Dealer's Manual	This manual describes hydraulic disc brake / dual control lever / satellite shifter installation, adjustment, and maintenance.
Dual Pivot Caliper Brake / Dual Control Lever (Di2) Dealer's Manual	This manual describes dual pivot caliper brake / dual control lever / satellite shifter installation, adjustment, and maintenance.
Rear Derailleur (Di2) Dealer's Manual	This manual describes rear derailleur function, system pairing (wired), installation, adjustment, and maintenance.
E-TUBE PROJECT User's Manual E-TUBE PROJECT Professional E-TUBE PROJECT Cyclist	This manual describes system pairing (wireless).

Workflow overview

We recommend the following workflow.

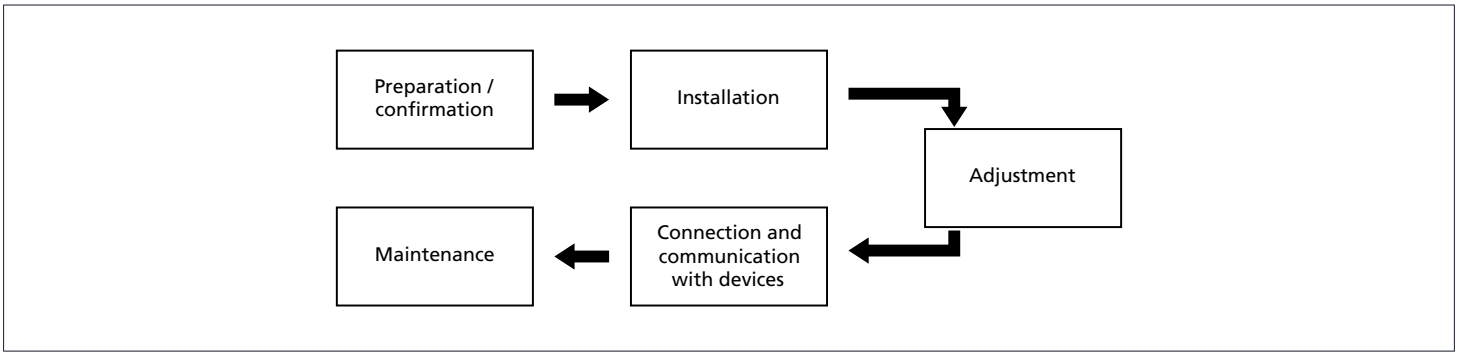

Preparation / confirmation

Process	Reference
Checking wiring	Overall wiring diagram (this manual)
	Wiring diagram around the cockpit (this manual)
Pairing	Wired connection (system pairing): Rear Derailleur Dealer's Manual Wireless connection (wireless pairing): E-TUBE PROJECT User's Manual E-TUBE PROJECT Professional E-TUBE PROJECT Cyclist
Checking before securing	Checking connections (this manual)
Handling electric wires	Electric wires (this manual)

Installation

Process	Reference
Installing the dual control levers	Hydraulic Disc Brake / Dual Control Lever (Di2) Dealer's Manual Dual Pivot Caliper Brake / Dual Control Lever (Di2) Dealer's Manual
Installing satellite shifters	
Temporarily installing the front derailleur	Front Derailleur Dealer's Manual FD-R9250 / FD-R8150 FD-R7150
Installing the rear derailleur	Rear Derailleur Dealer's Manual
Installing the battery	ROAD Di2 Battery and Parts Dealer's Manual
Installing the bottom bracket and cranks	Crankset Dealer's Manual
Securing the front derailleur	Front Derailleur Dealer's Manual FD-R9250 / FD-R8150 FD-R7150
Installing the brake calipers	Hydraulic Disc Brake / Dual Control Lever (Di2) Dealer's Manual Dual Pivot Caliper Brake / Dual Control Lever (Di2) Dealer's Manual
Securing the dual control levers	
Confirming the chain length / installing the chain	Rear Derailleur Dealer's Manual , Chain Dealer's Manual

Adjustment

Process	Reference
Adjusting the rear derailleur	Rear Derailleur Dealer's Manual
Adjusting the front derailleur	Front Derailleur Dealer's Manual FD-R9250 / FD-R8150 FD-R7150
Adjusting the dual control levers	Hydraulic Disc Brake / Dual Control Lever (Di2) Dealer's Manual Dual Pivot Caliper Brake / Dual Control Lever Dealer's Manual

Connection and communication with devices

Process	Reference
Connection and communication with devices	Rear Derailleur Dealer's Manual

Maintenance

Process	Reference
Maintenance	Dealer's manual for individual components

List of tools to be used

The following tools are needed for installation, adjustment, and maintenance purposes.

Tool	
TL-EW02	TL-EW02
TL-EW300	TL-EW300

Installation / removal

Introduction

Di2 systems compatible with wireless gear shifting differ from existing Di2 systems in the following ways:

- Di2 systems with wireless gear shifting do not require a conventional junction [A] or a separate wireless unit.
- Depending on the model, wireless gear shifting is possible without the need for wiring from around the handlebars to inside the frame.
- BT-DN300 has three E-TUBE ports.
- The rear derailleur has the functionality for battery charging, wireless connection with the dual control levers and external devices (Bluetooth ® LE or ANT), and a function button to switch shift modes, access adjustment mode, etc.

Overall wiring diagram

Route the wires through the frame before installing each component.
The ST-R9270, ST-R8170, and ST-R7170 are capable of connecting wirelessly to the derailleurs. Other models of dual control levers or satellite shifters must use wired connections.

NOTICE

- Complete wiring and check the connections before installing the bottom bracket. This is particularly important when you use a press-fit bottom bracket.
- When using the product, be sure to connect an electric wire to the center E-TUBE port. The product will not operate normally if no electric wire is connected to the center E-TUBE port.
- Be sure to attach the dummy plugs to any E-TUBE ports that do not have electric wires connected to them. The product will not operate normally if the dummy plugs are not attached.

Example wiring for wireless gear shifting

This is a wiring example showing wireless pairing of the dual control levers and rear derailleur to perform gear shifting. Refer to the user's manual for E-TUBE PROJECT (E-TUBE PROJECT Professional / E-TUBE PROJECT Cyclist) for how to perform pairing.

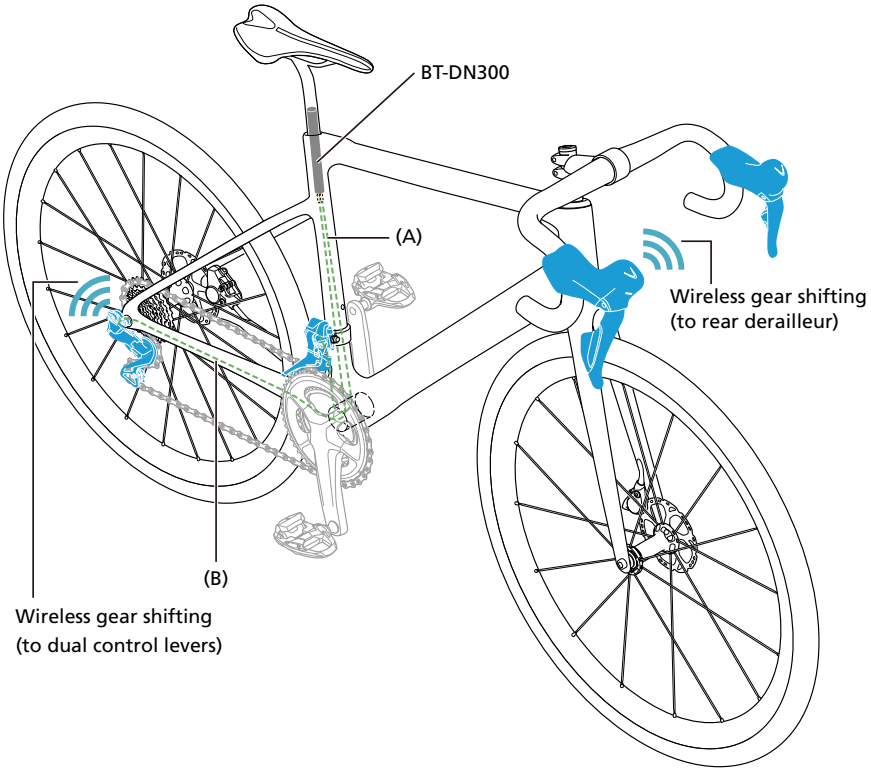

TECH TIPS

- The rear derailleur can connect to external devices in the same way as previous wireless units. Refer to the Rear Derailleur Dealer's Manual for details.

Electric wire (EW-SD300-I)

(A)	Battery to front derailleur	(A) ≤ 1,500 mm
(B)	Battery to rear derailleur	(B) ≤ 1,700 mm

Example wiring for wired gear shifting

The shifters and rear derailleur are connected by electric wires. This setup uses junction [B]. In this wiring example, the wires, excluding the wires around the cockpit, are routed through the inside of the frame.

Overall wiring diagram

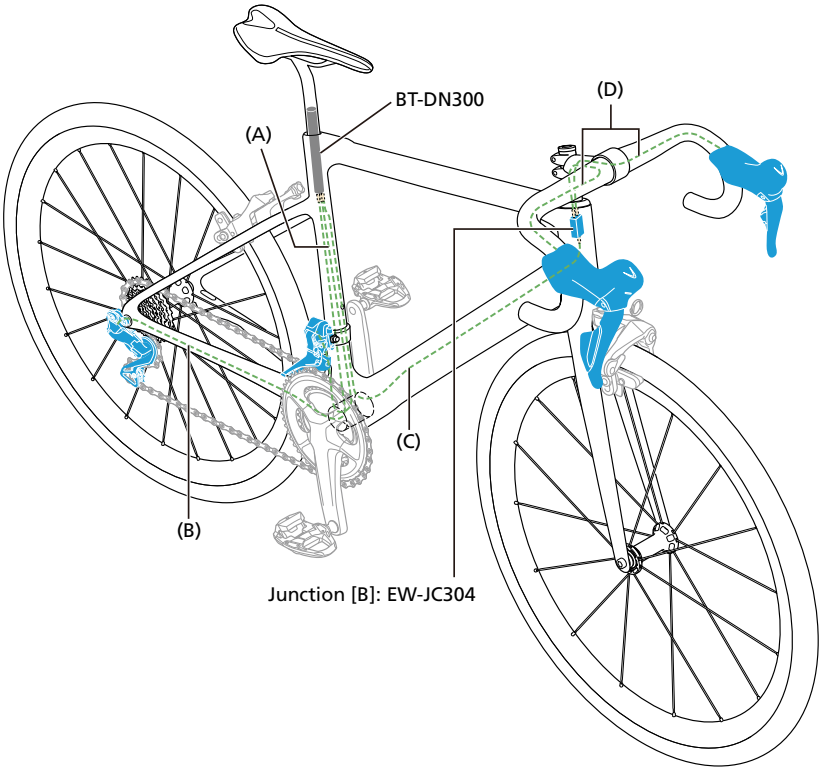

Electric wire (EW-SD300-I)

(A)	Battery to front derailleur	(A) ≤ 1,500 mm
(B)	Battery to rear derailleur	(B) ≤ 1,700 mm
(C)	Battery to junction [B]	(C) + (D) ≤ 2,200 mm
(D)	Dual control levers to junction [B]	

Wiring diagram around the cockpit

The ST-R7170 does not have an E-TUBE port for gear shifting or port for satellite shifter. Use it with wireless gear shifting.

Example wiring for wireless gear shifting

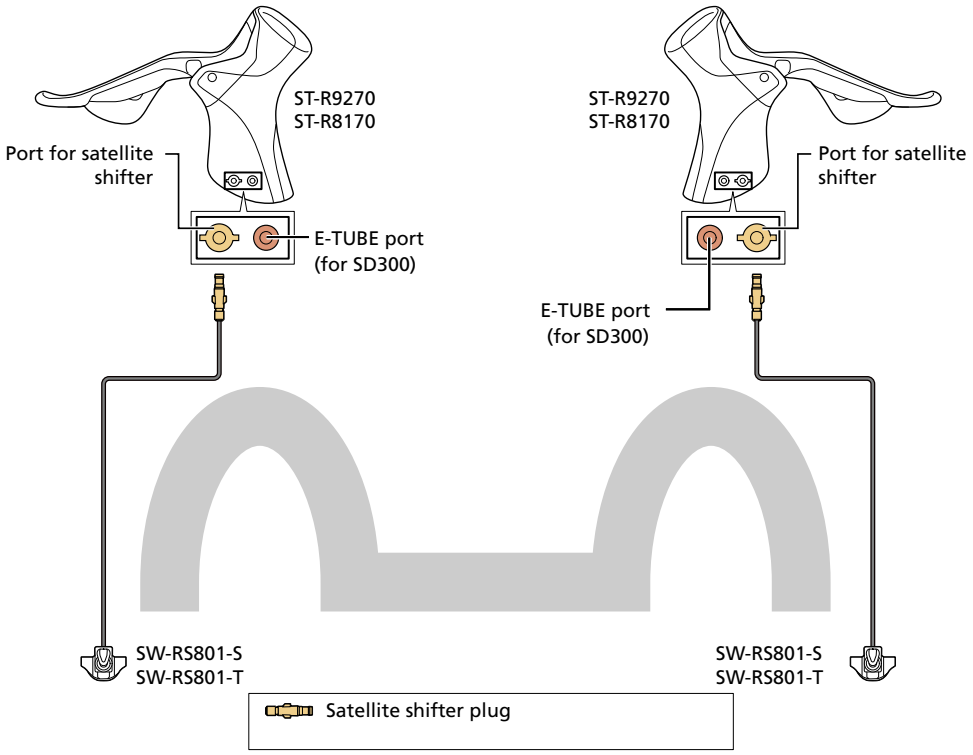

Example wiring for wired gear shifting (1)

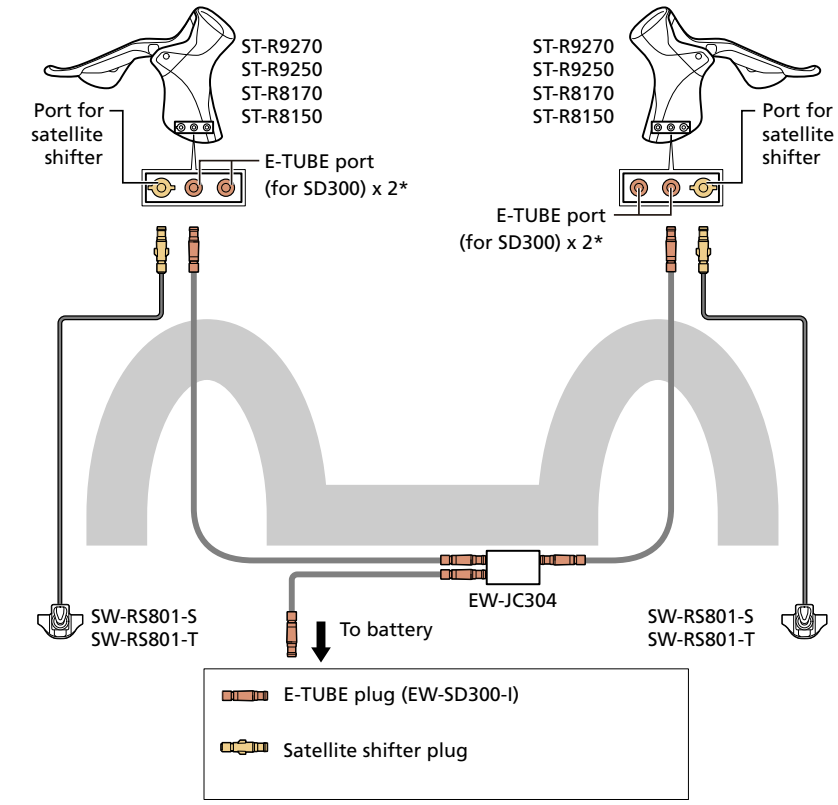

*The number of E-TUBE ports differs depending on the model.

Example wiring for wired gear shifting (2)

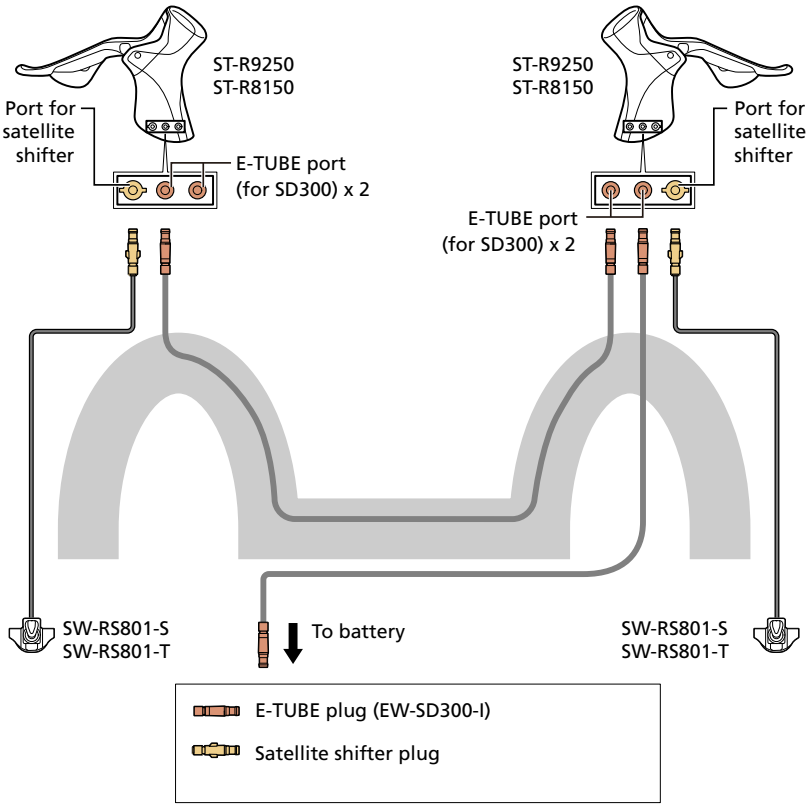

Wiring diagram for time trial / triathlon handlebar type

Wiring in which the dual control levers and battery are connected by electric wires. For information on compatible time trial/triathlon components, refer to the E-TUBE compatibility table (https://bike.shimano.com/e-tube/project/compatibillity.html).

NOTICE

- The cockpit area only uses the EW-SD50-I electric wire. Do not connect junction [A] or a wireless unit.

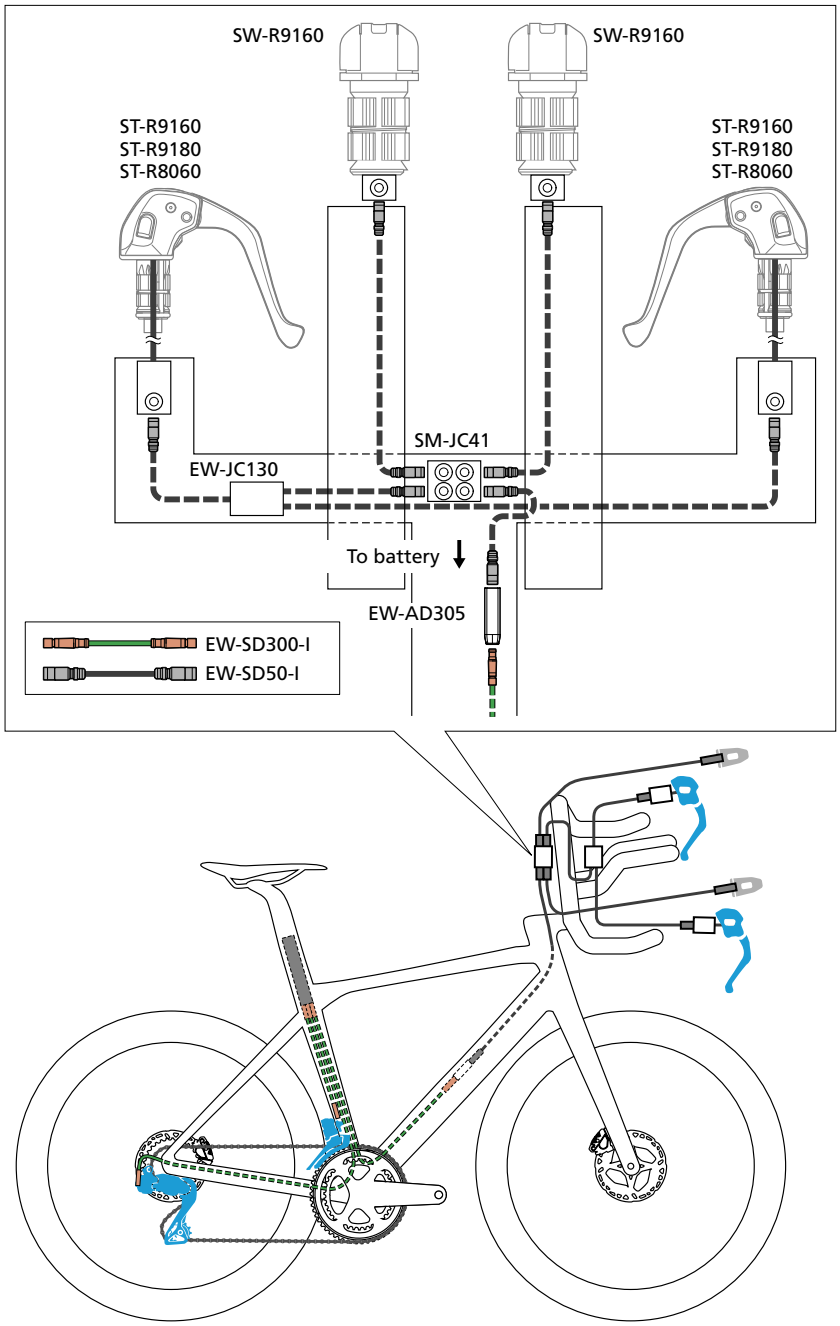

Wiring diagram around the battery

For wireless gear shifting, route wires as shown in the figure.

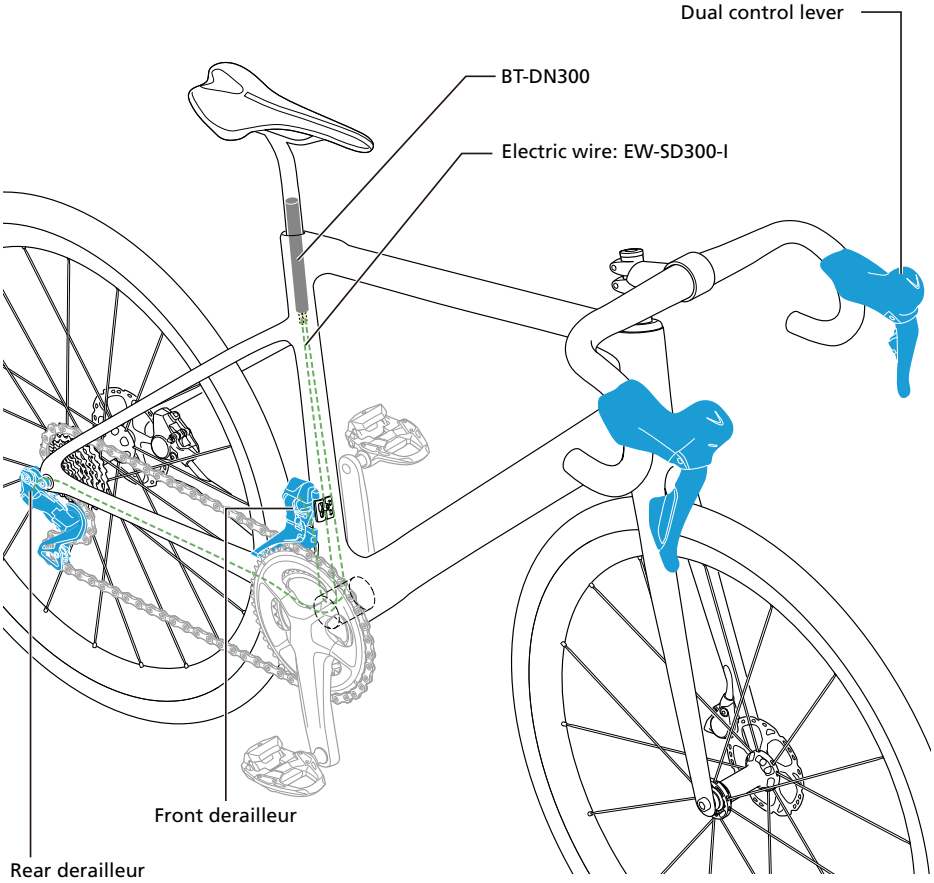

Pairing

Wireless gear shifting requires the dual control levers to be paired with the rear derailleur. Pairing is required after reinstalling or replacing the dual control levers or rear derailleur. Perform pairing with a wired or wireless connection.
For information on pairing with a wireless connection, refer to the user's manual for E-TUBE PROJECT (E-TUBE PROJECT Professional / E-TUBE PROJECT Cyclist). For information on pairing with a wired connection, refer to the dealer's manual for the rear derailleur (Di2) .

Connection and communication with devices

Connecting the bicycle to a device allows you to update the settings and firmware, and more. For details, refer to the Rear Derailleur Dealer's Manual .

Maintenance

Refer to the dealer's manuals for individual components for information on periodic maintenance.

Electric wires

Be sure to use the SHIMANO original tool to remove and insert electric wires.
There are two types of electric wire: the EW-SD300-I and the EW-SD50-I. The supported electric wire differs based on the component model. Check the component specifications on the SHIMANO product website in advance (https://productinfo.shimano.com/).

Supported products

The following products support each type of electric wire.

Product name	Intended purpose	EW-SD300-I type	EW-SD50-I type
SHIMANO original tool	Connecting / disconnecting the electric wires	TL-EW300	TL-EW02
Dummy plug	Plugging empty ports	Y7HE30000	Y6VE15000
Cord clip	Binding the wiring and the outer casing / brake hose together	EW-CL300-S (for shift outer casing) EW-CL300-M (for outer casing and brake hose)	Y70H98040
Grommet	Installing to the wire insertion hole of a frame that supports internal wiring	EW-GM300-S EW-GM300-M	SM-GM01 SM-GM02
Junction [B]	Conjoining the wiring inside and outside the frame	EW-JC304 EW-JC302	SM-JC41 SM-JC40 EW-JC200 EW-JC130
Conversion adapter	Connecting the EW-SD300-I and EW-SD50-I	EW-AD305	EW-AD305

NOTICE

- When connecting and disconnecting electric wires, do not forcibly bend the plug part. It may result in a poor connection.
- The SHIMANO original tool used for connection/disconnection and the accessories used for wiring differ for the EW-SD300-I and EW-SD50-I. Be sure to use a compatible product.
- EW-CL300-S is marked with a groove in order to differentiate it from EW-CL300-M.

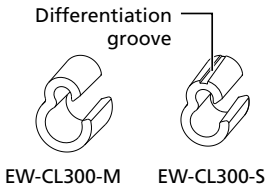

Conversion adapter

A conversion adapter (EW-AD305) is required to connect the EW-SD50-I to a component with an E-TUBE port for the EW-SD300-I.

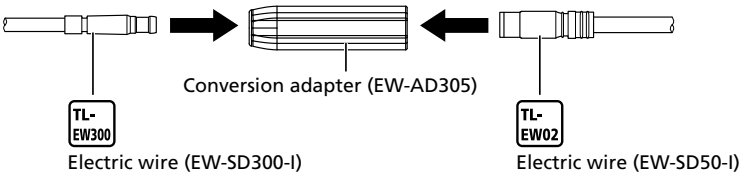

Connecting / disconnecting the electric wires

Be sure to use the SHIMANO original tool to connect and disconnect electric wires.

NOTICE

- When connecting and disconnecting electric wires, do not forcibly bend the plug part. It may result in a poor connection.

Connecting the electric wire (EW-SD300-I)

Connect the electric wire to the E-TUBE port.

1. **Set the plug of the electric wire to the TL-EW300.**
   If there is an alignment tab on the plug of the electric wire, check the shape of the E-TUBE port you are trying to connect to, and set it aligned with the alignment tab as shown in the figure.

Without alignment tab on plug

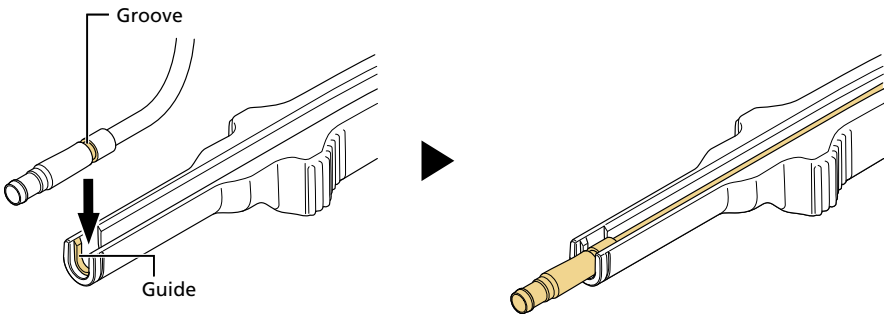

With alignment tab on plug

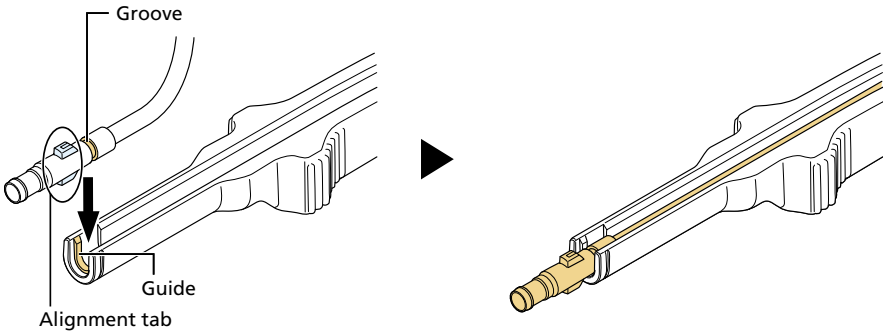

2. Insert the plug on the electric wire into the E-TUBE port.

Push it straight in until you feel it click into place.

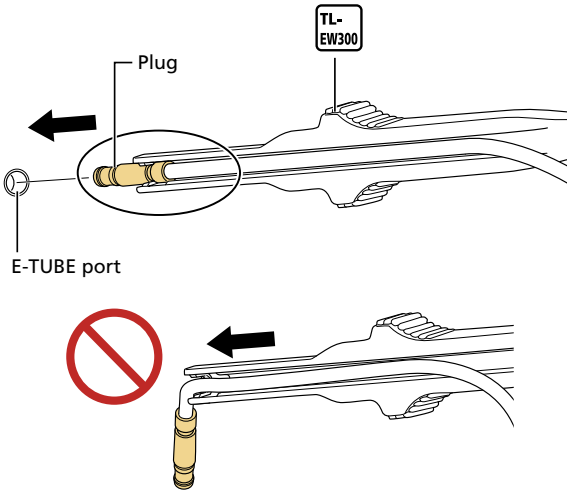

TECH TIPS

- You can use the TL-EW300 as indicated in the figure to install the electric wire.

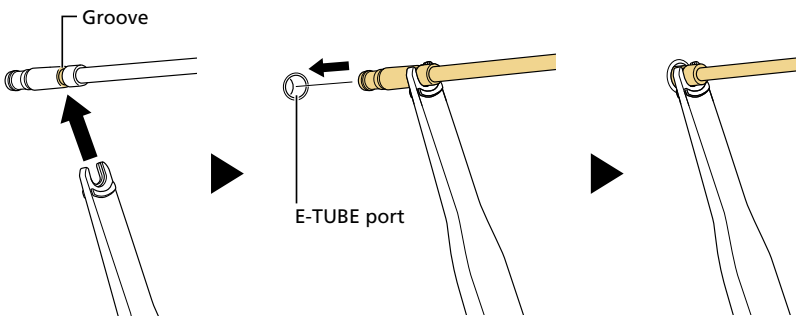

Disconnecting the electric wire (EW-SD300-I)

1. Disconnect the electric wire.

(1) Insert the TL-EW300 into the groove on the plug part of the electric wire.

(2) Disconnect the electric wire from the E-TUBE port.

* As shown in the figure, use part (A) of the TL-EW300 as a fulcrum, move the tool like a lever, then disconnect the plug part.

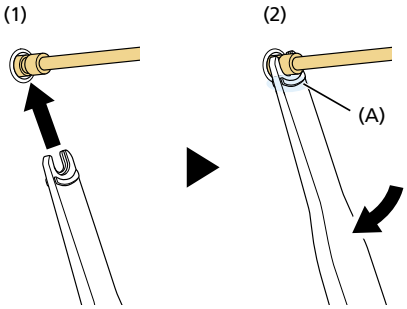

TECH TIPS

- If there is limited space to insert the tool, you can use the TL-EW300 as indicated in the figure to disconnect the electric wire.

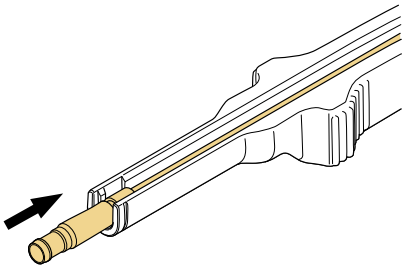

Connecting the electric wire (EW-SD50-I)

Connect the electric wire to the E-TUBE port.

1. **Set the plug of the electric wire to the TL-EW02.**
   If there is an alignment tab on the plug of the electric wire, set it aligned with the groove on the SHIMANO original tool.

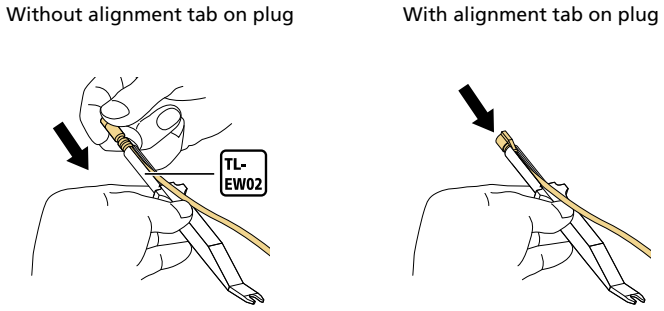

2. **Insert the plug on the electric wire into the E-TUBE port.**
   Push it straight in until you feel it click into place.

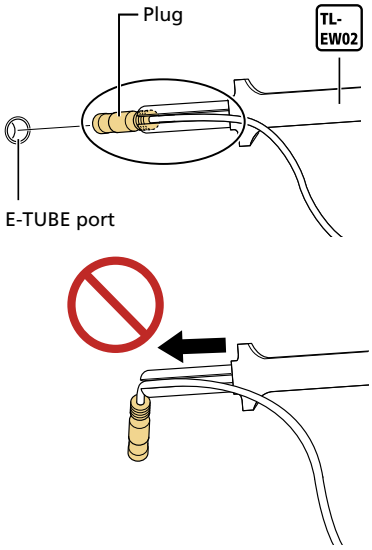

Disconnecting the electric wire (EW-SD50-I)

1. Disconnect the electric wire.

(1) Insert the TL-EW02 into the groove on the plug of the electric wire.

(2) Disconnect the electric wire from the E-TUBE port.

* As shown in the figure, use part (A) of the TL-EW02 as a fulcrum, move the tool like a lever, then disconnect the plug part. If there is limited space to insert the tool, lift the TL-EW02 straight up and disconnect the electric wire.

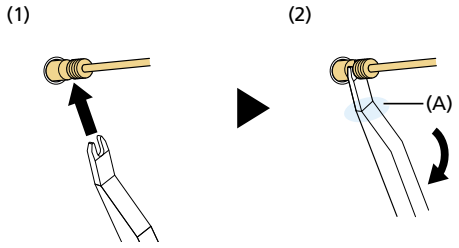

NOTICE

- Do not repeatedly connect and disconnect the electric wire too often. The connector may become worn or deformed, and affect the waterproof function or connection function.

Insertion direction of the electric wires for internal use

Electric wires for internal use come with wire holders to prevent the electric wires from moving inside the frame. When passing an electric wire for internal use through the frame, insert in the direction shown in the figure.

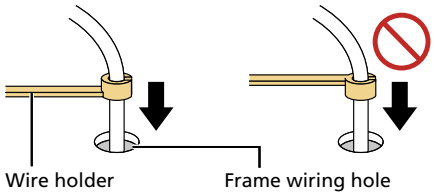

NOTICE

- When passing an electric wire through the frame, handlebar, or other parts, protect the plug with masking tape or a similar material to prevent foreign matter from getting inside.

TECH TIPS

- Insert the wire holder in the direction shown in the figure above. This will allow the wire holders to be removed more easily when pulling out the electric wire from the frame wiring hole it was inserted into.

Finishing for internal wiring

When routing the electric wire inside the frame, install a grommet to the wiring hole of the frame for protective purposes after passing the electric wire through the frame.

Example of installing to the chainstay
(wiring to the rear derailleur)

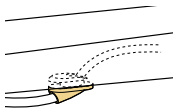

Example of installing to the seat tube
(wiring to the front derailleur)

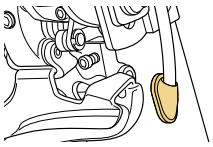

TECH TIPS

- There are two types of grommets as shown in the figure. Use the correct one according to the shape of the wiring hole.

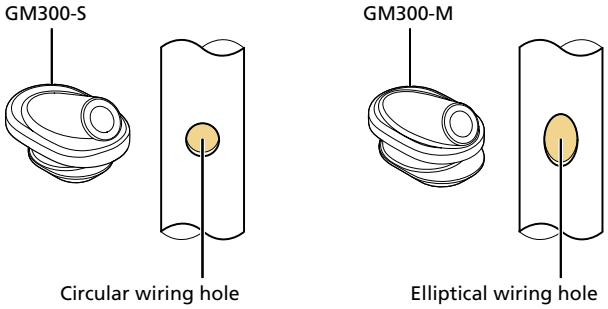

1. **Install each component and connect the electric wire.**
   For details, refer to the dealer's manuals for individual components. Pass the electric wire through the inside of the frame as indicated in the wiring diagram, and connect each component.

2. **After installing and connecting all the components, perform the procedures in “Checking connections.”**

3. **Open the grommet from the center, and place it over the electric wire in the appropriate position.**
   Perform the procedure after determining the length of the electric wire to expose from the frame in advance.

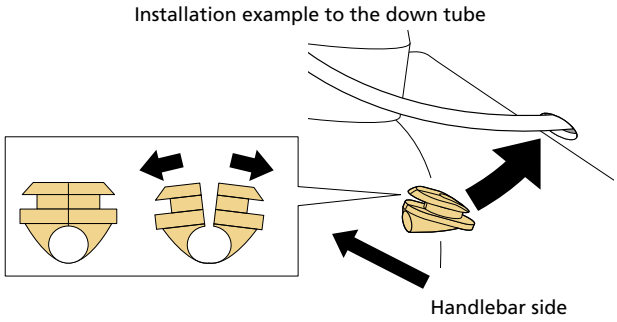

4. **Install the grommet.**
   (1) Insert the grommet so that it hooks onto the wiring hole of the frame.
   (2) Push in the grommet with your finger.

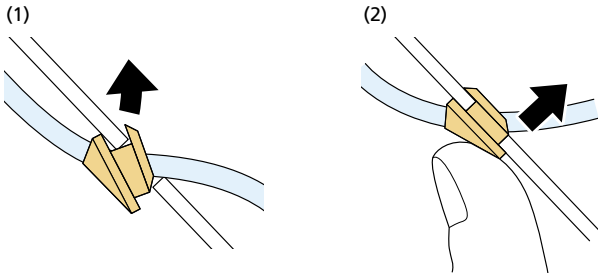

TECH TIPS

- If the grommet is difficult to insert, spray it with isopropyl alcohol to aid installation.

Checking connections

After connecting the electric wires to all of the components, check the operation.

1. Check the connection for each component.

(1) Refer to the user's manual of the dual control lever (UM-0MX0A / UM-0RM0A) to operate the shift switch and confirm the operation of the derailleurs.

(2) Refer to the user's manual for the rear derailleur to check the LED display for operation, etc.

(3) Connect to E-TUBE PROJECT and check that each component is displayed in E-TUBE PROJECT. For details, refer to the user's manual for E-TUBE PROJECT (E-TUBE PROJECT Professional / E-TUBE PROJECT Cyclist).

When there is a problem with a component connection
Return to the installation procedure for each component, and check the electric wire connections and pairing.

2. After checking the connections, disconnect the electric wires from the battery and components.

⚠ WARNING

- Make sure to disconnect the electric wires from the battery and components when performing a procedure at a position near the front derailleur, such as installation and removal of the crankset and front derailleur or chain installation and length adjustment. If the front derailleur is accidentally triggered while performing a maintenance procedure, your fingers could get caught in the front derailleur and be injured.

Troubleshooting

When a problem occurs

Check the following information if you have a problem.

If the problem is not covered below or cannot be solved with the indicated method, contact a distributor.

Symptoms	Causes / possibilities	Remedies
Click cannot be felt when connecting an electric wire. Cannot fully connect a wire.	Is there foreign matter inside the plug or E-TUBE port?	Check that there is no foreign matter inside the plug or E-TUBE port. If foreign matter is present, use a blower to remove it. If the problem persists, replace the electric wire with a new one.

Please note: specifications are subject to change for improvement without notice. (English)
© Mar. 2022 by SHIMANO INC. ITP