SMART DISPLAY MODULE SPECIFICATION

ESP32-P4-Pi-VIEWE development board	
Model:	ESP32-P4-Pi-VIEWE
Version:	V1.1
Date:	2025-12-15

Customer Confirmation

Approved by	Notes

VIEWE TECHNOLOGY CO., LTD

REVISION HISTORY

Revision	Date	Contents of Revision Change	Remark
V1.0	20250927	Preliminary release	
V1.1	20251215	Add relevant data manual information, h descriptions, etc.	

VIEWE TECHNOLOGY CO., LTD

TABLE of CONTENTS

1 INTRODUCTION **4**

2 FUNCTIONAL FEATURES **5**

2.1 CPU 5

2.2 Memory 5

2.3 Peripheral Interfaces 5

3 APPLICATIONS **5**

4 HARDWARE DESCRIPTION **6**

4.1 Module Introduction 6

4.2 GPIO Definition 8

4.3 Hardware Version 9

5 DEVELOPMENT BOARD ACCESSORIES： **9**

6 FUNCTIONAL BLOCK DIAGRAM **9**

7 INSTRUCTIONS FOR USE **10**

8 RELATED DOCUMENTS **10**

9 EXAMPLES **10**

10 PRODUCT SIZE **11**

VIEWE TECHNOLOGY CO., LTD

1 Introduction

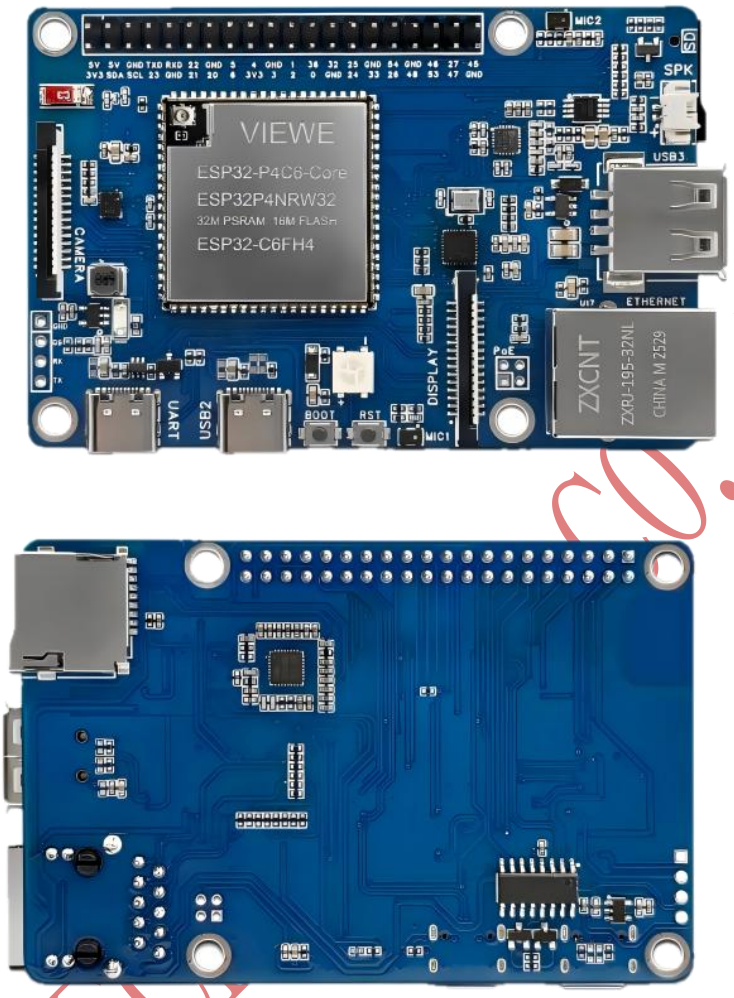

The ESP32-P4-Pi-VIEWE development board is designed based on the VIEWE ESP32-P4-Core module, which integrates ESP32P4 and ESP32-C6 chips and supports Wi-Fi 6 and Bluetooth 5 wireless connections. It provides a variety of Human-Machine Interface (HMI) interfaces, including MIPI-CSI (integrated with Image Signal Processor ISP), MIPI-DSI, SPI, I2S, I2C, LED PWM, MCPWM, RMT, ADC, UART, and TWAI. In addition, it supports USB OTG 2.0 H5, reserves an RJ45 Ethernet interface, can be expanded with POE (Power over Ethernet) functionality, and is equipped with a 40-pin GPIO expansion interface.

The ESP32-P4 is powered by a 360MHz dual-core RISC-V processor and supports a maximum of 32MB PSRAM. It comes with peripherals such as UDB 2.0, MIPI-CSI/DSI, H.264, and Ethernet, meeting the requirements of low-cost, high-performance, and low-power multimedia development. Furthermore, the ESP32-P4 integrates a digital signature peripheral and a dedicated key management unit to ensure data and operational security.

Designed specifically for high-performance and high-security applications, the ESP32-P4-Pi-VIEWE caters to the needs of embedded systems in areas such as human-machine interaction, edge computing, and I/O expansion.

VIEWE TECH CO.,LTD

2 Functional Features

2.1 CPU

- Equipped with a RISC-V 32-bit dual-core processor (HP system), with DSP and instruction set extensions, floating-point arithmetic unit (FPU), and a main frequency of up to 400 MHz.
- Equipped with a RISC-V 32-bit single-core processor (LP system), with a main frequency of up to 40 MHz.
- Equipped with an ESP32-C6 WIFI/BT coprocessor, expanding functions such as WIFI 6/Bluetooth 5 through SDIO.

2.2 Memory

- 128 KB of high-performance (HP) system read-only memory (ROM).
- 16 KB of low-power (LP) system read-only memory (ROM).
- 768 KB of high-performance (HP) L2 memory (L2MEM).
- 32 KB of low-power (LP) SRAM.
- 8 KB of system tightly coupled memory (TCM).
- 32 MB PSRAM is stacked and sealed inside the package, and 16MB Nor Flash is connected through the QSPI interface.

2.3 Peripheral Interfaces

- Powerful image and voice processing capabilities, with dedicated image and voice processing interfaces including a JPEG codec, Pixel Processing Accelerator (PPA), Image Signal Processor (ISP), and H.264 video encoder.
- 32MB PSRAM stacked and packaged within the chip; the module integrates 16MB Nor Flash.
- Common peripheral interfaces led out on the board: MIPI-CSI, MIPI-DSI, USB 2.0 OTG, Ethernet, SDIO 3.0 SD card slot, dual microphones, speaker terminals, and RTC battery terminals.
- 2×20 pin headers led out on the board, providing access to 28 remaining programmable GPIOs.
- Security mechanisms: Secure Boot, Flash encryption, hardware encryption accelerator, and hardware random number generator. It also supports hardware access protection, enabling Access Permission Management (APM) and permission separation.

3 Applications

With low power consumption, ESP32-P4 is an ideal choice for IoT devices in the following areas:

- Smart Home
- Industrial Automation
- Health Care
- Consumer Electronics
- Smart Agriculture
- Retail Self-Service Terminals (POS, Vending Machines)
- Service Robot
- Multimedia Player
- Cameras for Video Streaming
- High-Speed USB Host and Device
- Smart Voice Interaction Terminal
- Edge Vision AI Processor
- HMI Control Pane

VIEWE TECHNOLOGY CO., LTD

4 Hardware Description

4.1 Module Introduction

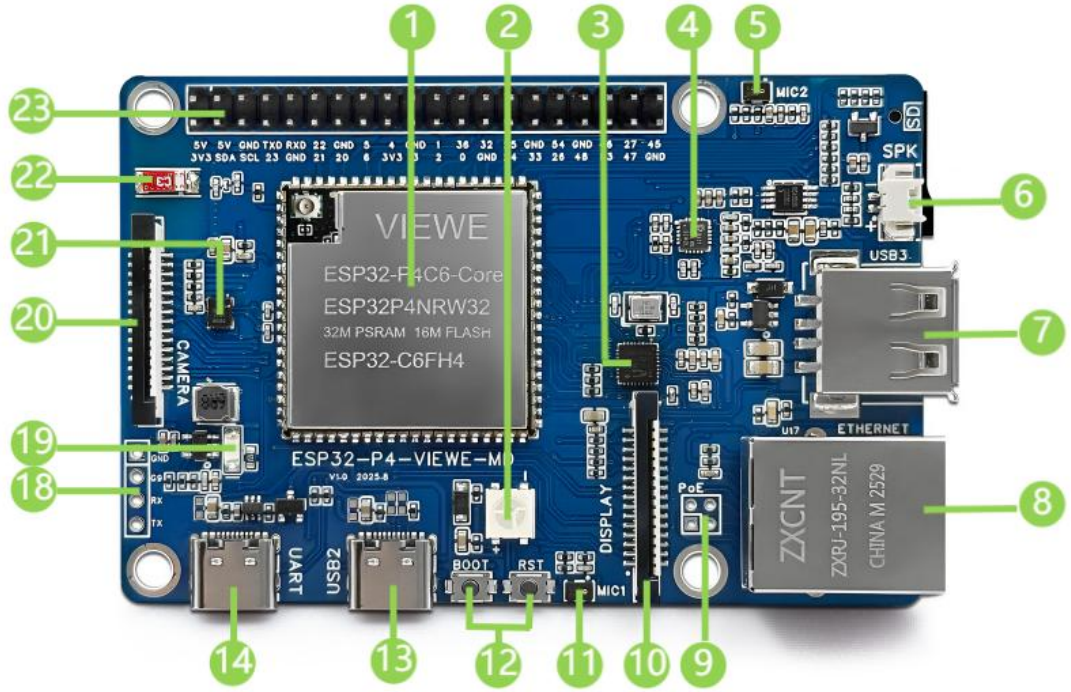

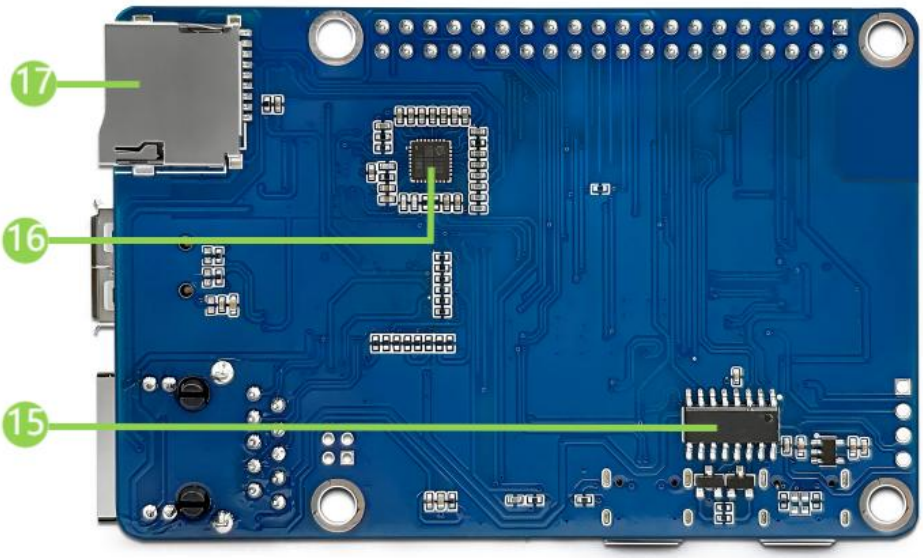

1、ESP32-P4-Module
ESP32-P4-Core Built-in ESP32-P4NRW32、ESP32-C6 、 16MB Nor Flash 、 WIFI 6/Bluetooth 5

2、RGB LED

3、Ethernet port chip

4、ES8311
Used for processing audio encoding and decoding

5、MIC1

6、Speaker interface
MX1.25 2P connector, supporting 8Ω2W speaker

7、Type-A interface
USB OTG 2.0 High Speed interface

8、100 Mbps RJ45 Ethernet port

9、PoE Module interface
Supports external PoE module connection,use PoE supply power

10、Display interface
MIPI-2lane，Compatible with multiple MIPI screens of the VIEWE series

11、MIC2

12、 Button
Boot :Press when powering on or resetting to enter download mode
Reset

13、Type-C interface
Can be used for power supply, program burning

14、Type-C UART interface
Can be used for power supply, program burning, and debugging

15、CH340C

16、ES7210
Echo cancellation chips can be used to eliminate echoes and improve the accuracy of audio collection.

17、TF card slot
SDIO 3.0 interface protocol

18、ESP32-C6 UART interface

19、Power indicator light

20、Camera interface
MIPI 2-lane， Currently supported models: GC0308, OV2640, OV2710, OV5645, OV5647, SC030IOT, SC101IOT, SC2336

21、6-axis attitude sensor
3-axis accelerometer and 3-axis gyroscope sensor

22、ESP32-C6 SMD ANT
SDIO interface protocol, expanding Wi-Fi 6 and Bluetooth 5

23、40PIN Pin header

4.2 GPIO Definition

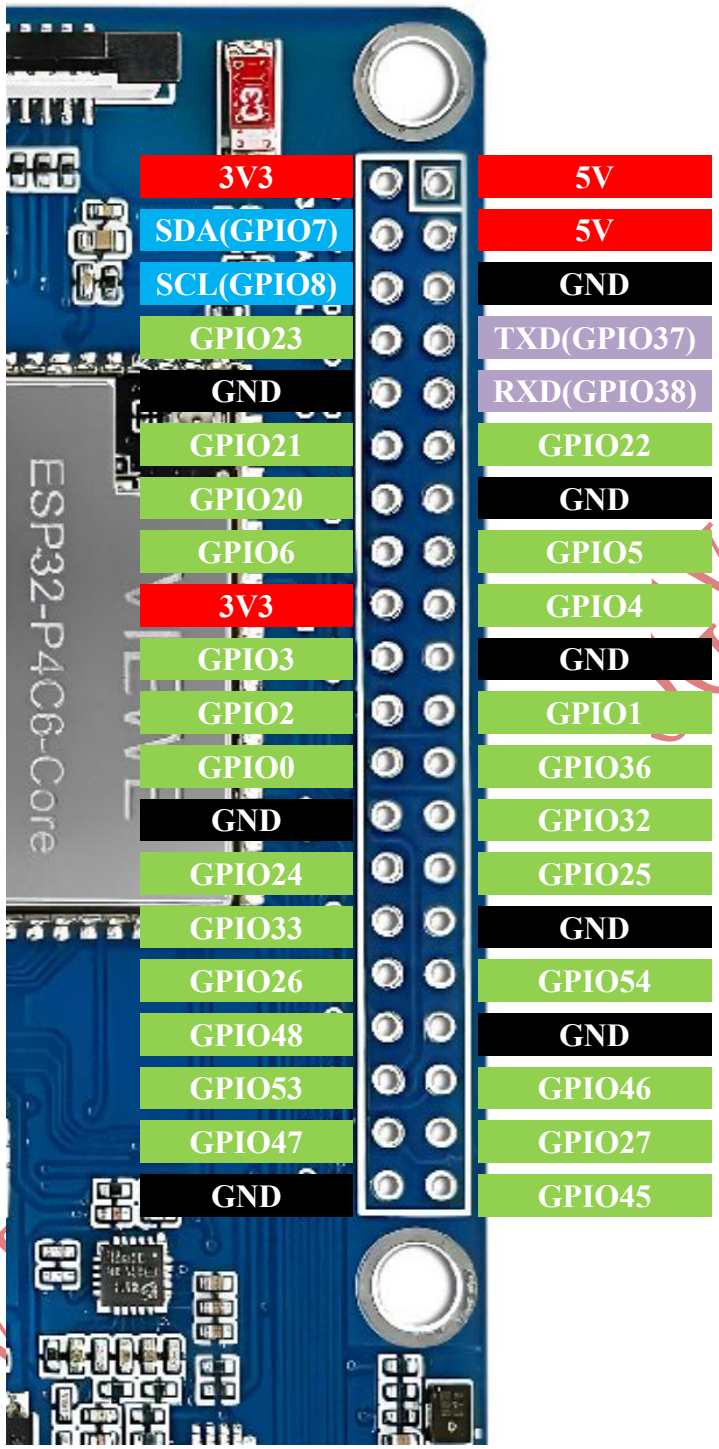

Power GND GPIO I2C UART

VIEWE TECHNOLOGY CO.,LTD

4.3 Hardware Version

（1）ESP32-P4-Pi-VIEWE 1.0

5 Development Board Accessories：

The following optional accessories are included in the packaging of the ESP32-P4-Pi-VIEWE:

- Display and its accessories (optional)
  - ✧ 7-inch MIPI DSI capacitive touch screen with a resolution of 1024 x 600 pixels
  - ✧ 4-inch MIPI DSI capacitive touch screen with a resolution of 720 x 720 pixels
  - ✧ LCD screen adapter board
  - ✧ Screen cable
- Camera and its accessories (optional)
  - ✧ 2-megapixel MIPI CSI interface camera
  - ✧ Camera adapter board
  - ✧ Camera cable

6 Functional Block Diagram

The main components and connection methods of the ESP32-P4-Pi-VIEWE-Board are shown in the following figure:

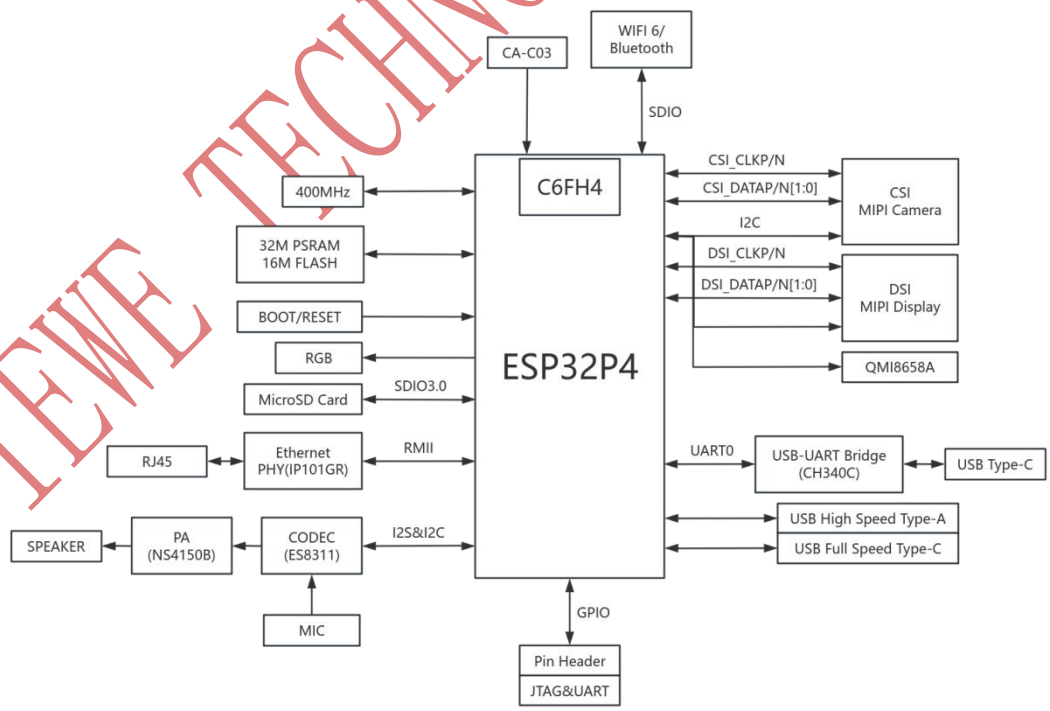

VIEWE TECHNOLOGY CO.,LTD

7 Instructions for Use

This tutorial aims to guide users to set up the software environment for ESP32-P4 hardware development, and demonstrates how to use the ESP-IDF configuration menu, compile, and download firmware to the ESP32-P4 development board through simple examples.

- Preparation
  - Hardware
    - ESP32-P4-Pi-VIEWE Development Board
    - USB data cable (Type-A to Type-C, prepared as needed)
    - Computer (Windows, Linux or macOS)
  - Software (It is recommended to install ESP-IDF using an integrated development environment. If you are familiar with ESP-IDF, you can start directly from the ESP-IDF terminal. You can choose any of the following development methods.)
    - VSCode + ESP-IDF plugin (recommended)
    - Eclipse + ESP-IDF plugin (Espressif-IDE)
    - Arduino IDE
- Getting-start
  - Please go to ESP-IDF Quick Start to see how to quickly set up the development environment and burn the application to your development board.
  - The application examples for the development board are stored in Examples. You can configure the project options by entering idf.py menuconfig in the examples directory.

8 Related Documents

- Camera Specification(The SC2336 camera is used by default)
- Display Specification
- ESP32-P4 Datasheet (Chinese)
- ESP32-P4 Datasheet (English)
- ESP32-P4 Technical Reference Manual (Chinese)
- ESP32-P4 Technical Reference Manual (English)
- ESP32-P4-Pi Schematic Diagram
- ESP32-P4-Core Schematic Diagram
- ESP32-P4-Core Datasheet
- ESP32-C6 Datasheet(Chinese)
- ESP32-C6 Datasheet(English)
- IMU

9 Examples

- Github: https://github.com/VIEWESMART/ESP32-P4-Pi
- Gitee: https://gitee.com/VIEWESMART/ESP32-P4-Pi

VIEWE TECHNOLOGY CO., LTD

10 Product Size

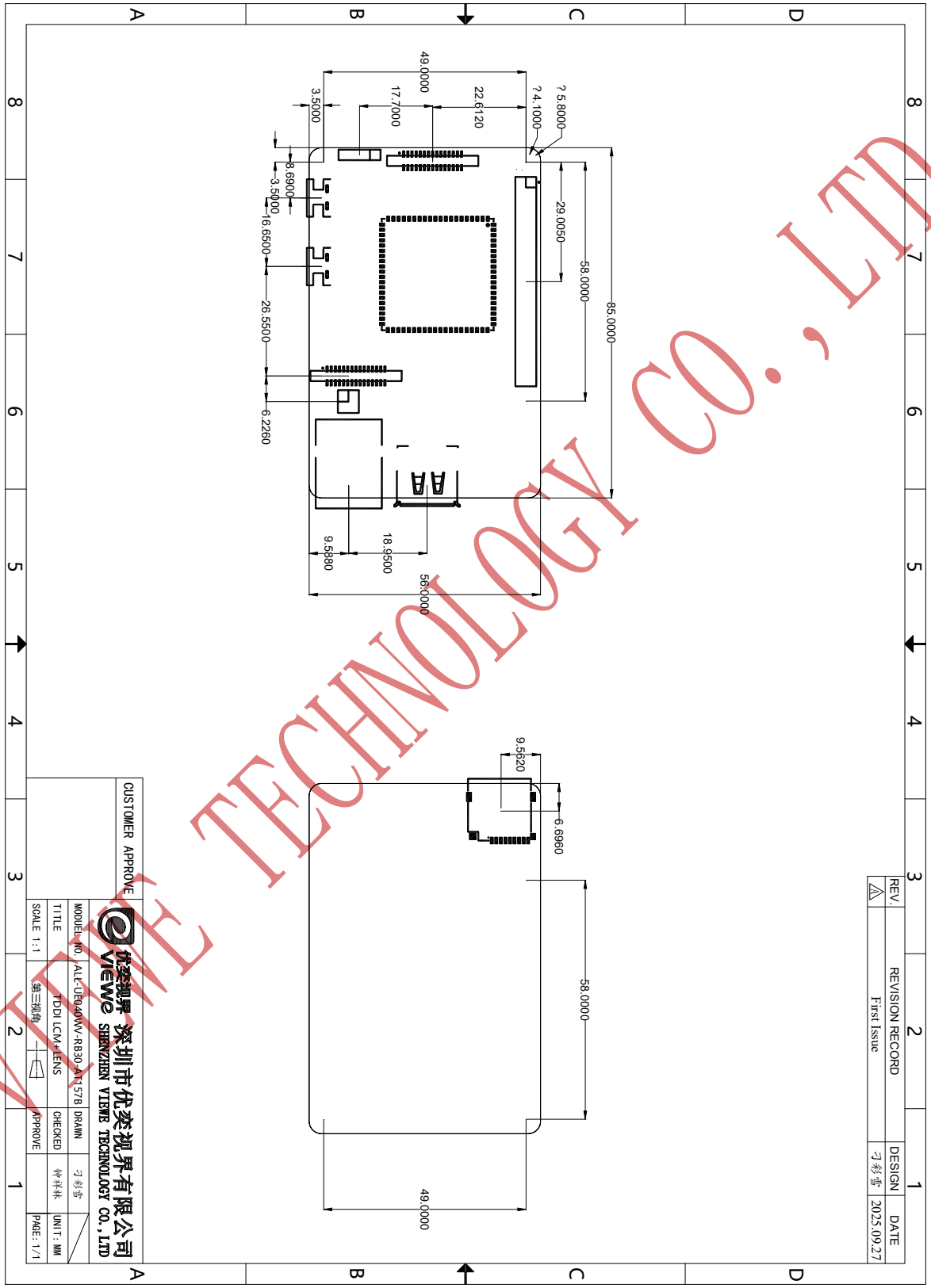

VIEWE TECHNOLOGY CO.,LTD