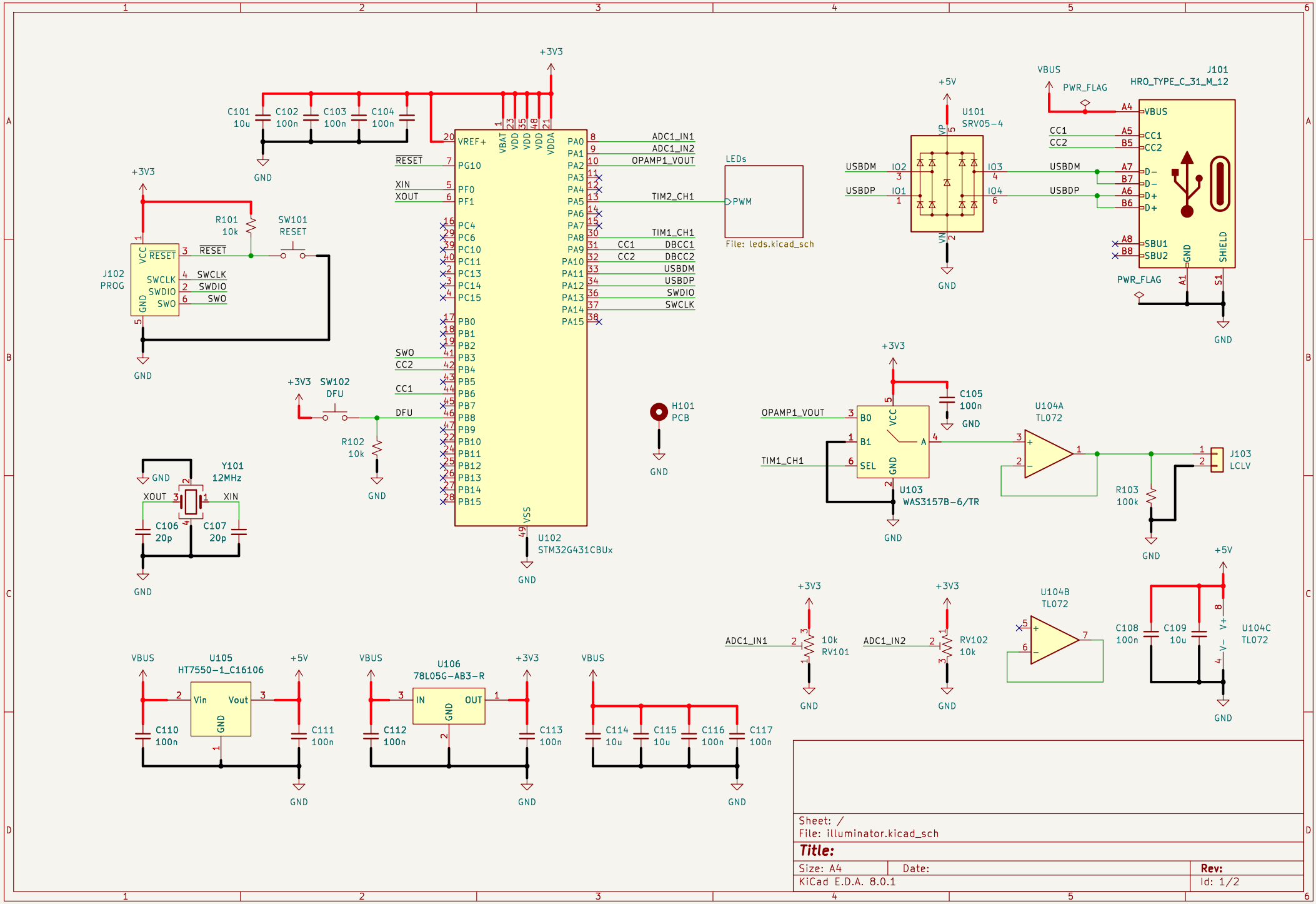

Sheet: /
File: illuminator.kicad_sch

Title:

Size: A4	Date:	Rev:
KiCad E.D.A. 8.0.1		Id: 1/2

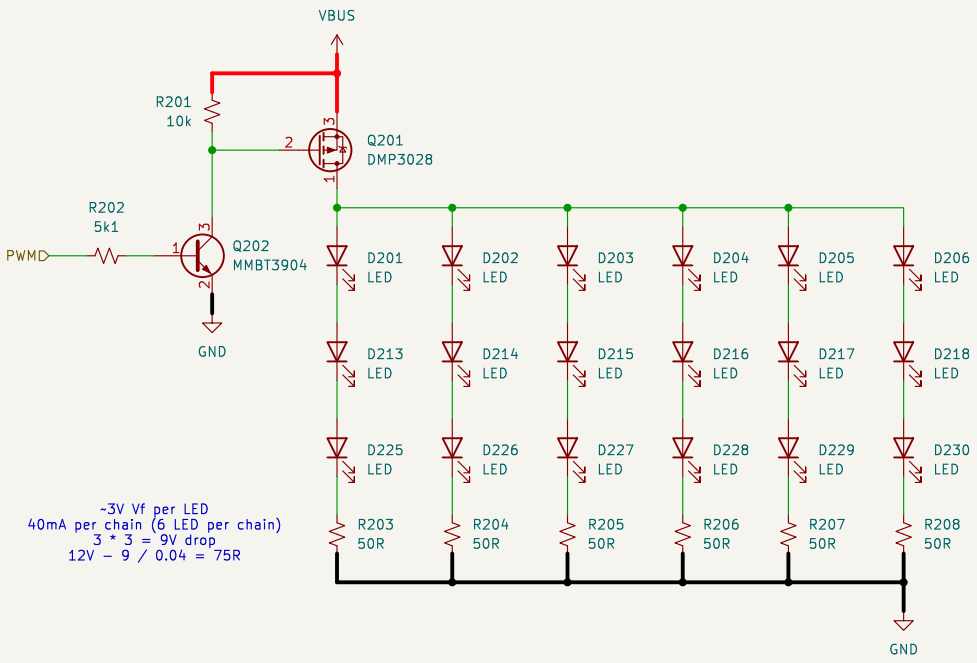

Sheet: /LEDs/
File: leds.kicad_sch

Title:

Size: A4	Date:	**Rev:**
KiCad E.D.A. 8.0.1		Id: 2/2