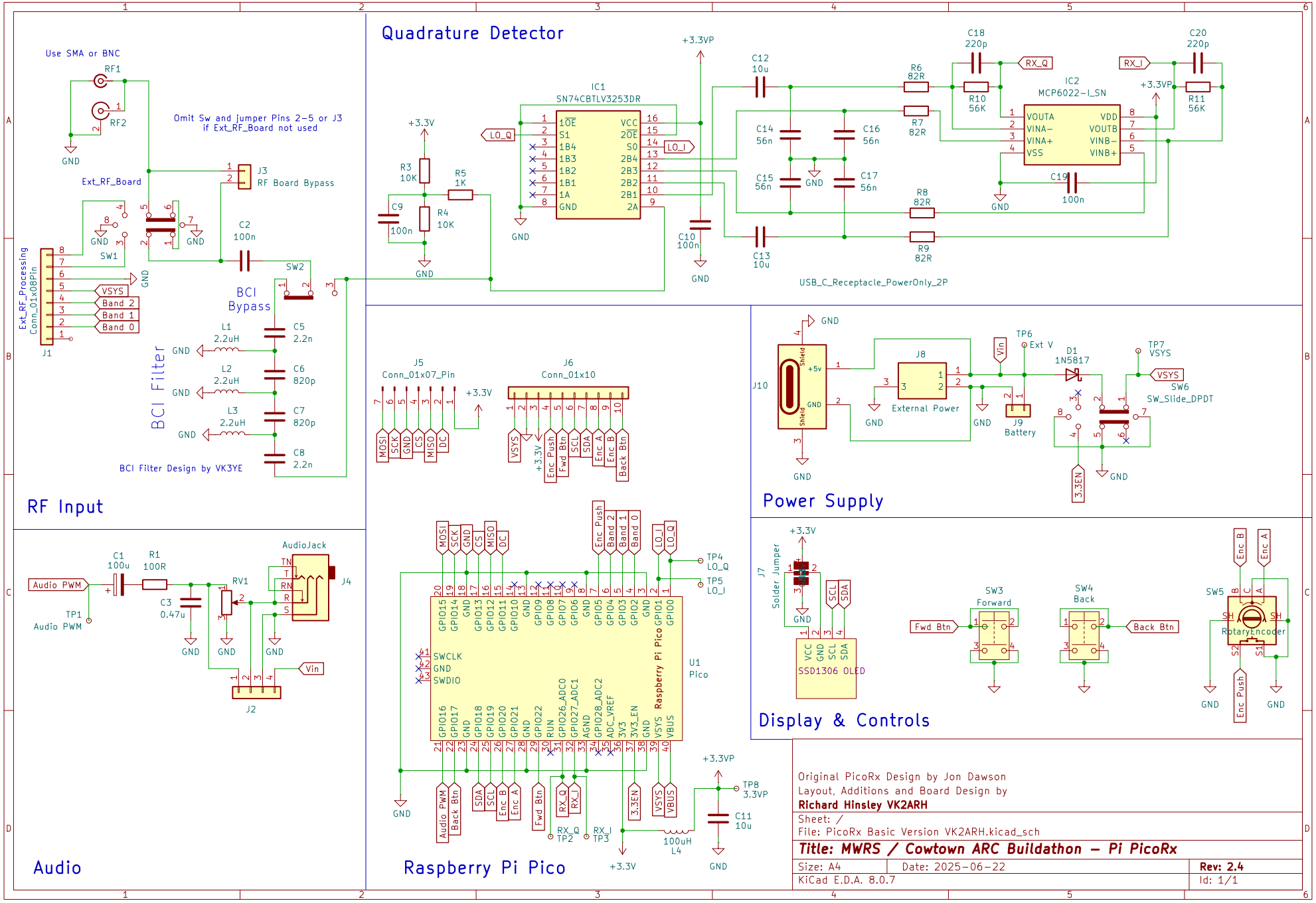
Quadrature Detector
Use SMA or BNC
RF1
RF2
GND
Omit Sw and jumper Pins 2-5 or J3
if Ext_RF_Board not used
Ext_RF_Board
J3
RF Board Bypass
SW1
C2
100n
SW2
BCI
Bypass
Ext_RF_Processing
Conn_01x08Pin
J1
VSYS
Band 2
Band 1
Band 0
BCI Filter
L1
2.2uH
L2
2.2uH
L3
2.2uH
C5
2.2n
C6
820p
C7
820p
C8
2.2n
BCI Filter Design by VK3YE
RF Input
+3.3V
R3
10K
R5
1K
C9
100n
R4
10K
LO_Q
IC1
SN74CBTLV3253DR
1OE
S1
1B4
1B3
1B2
1B1
1A
GND
VCC
2OE
S0
2B4
2B3
2B2
2B1
2A
LO_I
C10
100n
+3.3VP
C12
10u
C13
10u
C14
56n
C15
56n
C16
56n
C17
56n
R6
82R
R7
82R
R8
82R
R9
82R
C18
220p
R10
56K
RX_Q
IC2
MCP6022-I_SN
VOUTA
VINA-
VINA+
VSS
VDD
VOUTB
VINB-
VINB+
C19
100n
C20
220p
R11
56K
RX_I
USB_C_Receptacle_PowerOnly_2P
J5
Conn_01x07_Pin
MOSI
SCK
GND
CS
MISO
DC
J6
Conn_01x10
VSYS
+3.3V
Enc Push
Fwd Btn
SCL
SDA
Enc A
Enc B
Back Btn
J10
Shield
+5v
J8
External Power
Vin
TP6
Ext V
D1
1N5817
TP7
VSYS
SW6
SW_Slide_DPDT
J9
Battery
3.3EN
Power Supply
Audio PWM
C1
100u
R1
100R
C3
0.47u
RV1
AudioJack
J4
TN
T
RN
R
S
TP1
Audio PWM
J2
Audio
MOSI
SCK
GND
CS
MISO
DC
Enc Push
Band 2
Band 1
Band 0
LO_I
LO_Q
TP4
LO_Q
TP5
LO_I
GPIO15
GPIO14
GPIO13
GPIO12
GPIO11
GPIO10
GPIO9
GPIO8
GPIO7
GPIO6
GPIO5
GPIO4
GPIO3
GPIO2
GPIO1
GPIO0
SWCLK
SWDIO
Raspberry Pi Pico
U1
Pico
GPIO16
GPIO17
GPIO18
GPIO19
GPIO20
GPIO21
GPIO22
RUN
GPIO26_ADC0
GPIO27_ADC1
GPIO28_ADC2
ADC_VREF
3V3
3V3_EN
VSYS
VBUS
Audio PWM
Back Btn
SDA
SCL
Enc B
Enc A
Fwd Btn
RX_Q
RX_I
RX_Q
TP2
RX_I
TP3
3.3EN
VSYS
VBUS
+3.3VP
TP8
3.3VP
C11
10u
100uH
L4
Raspberry Pi Pico
J7
Solder Jumper
VCC
GND
SCL
SDA
SSD1306 OLED
SW3
Forward
Fwd Btn
SW4
Back
Back Btn
SW5
RotaryEncoder
S1
S2
Display & Controls
Original PicoRx Design by Jon Dawson
Layout, Additions and Board Design by
Richard Hinsley VK2ARH
Sheet: /
File: PicoRx Basic Version VK2ARH.kicad_sch
Title: MWRS / Cowtown ARC Buildathon – Pi PicoRx
Size: A4
Date: 2025-06-22
Rev: 2.4
KiCad E.D.A. 8.0.7
Id: 1/1