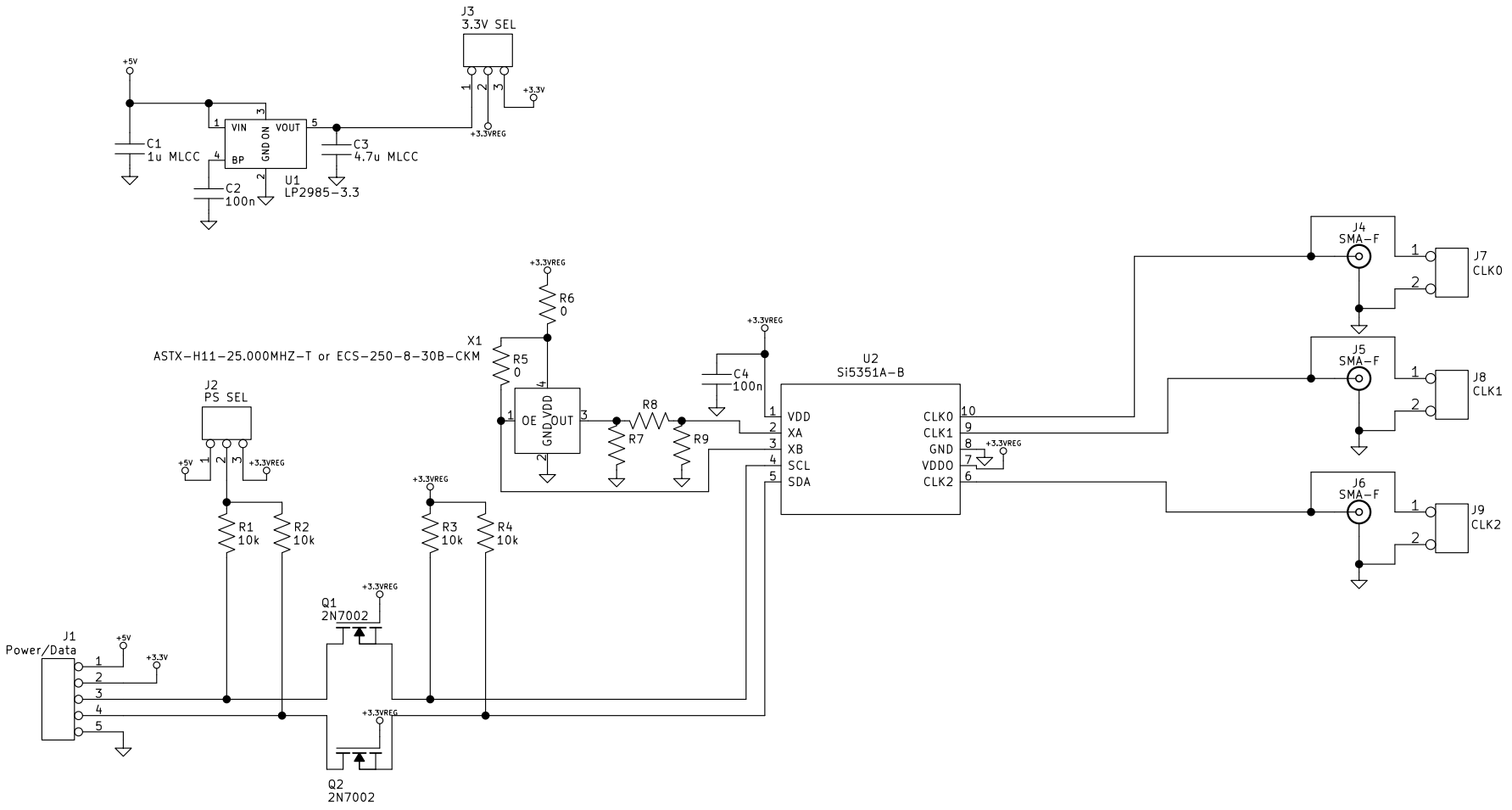

Creative Commons License CC-BY-SA

Etherkit

Sheet: /
File: Si5351ABreakout.sch

Title: Si5351A Breakout

Size: USLetter	Date: 2017-07-16	**Rev: D**
KiCad E.D.A. kicad 4.0.6-e0-634953ubuntu16.04.1		Id: 1/1