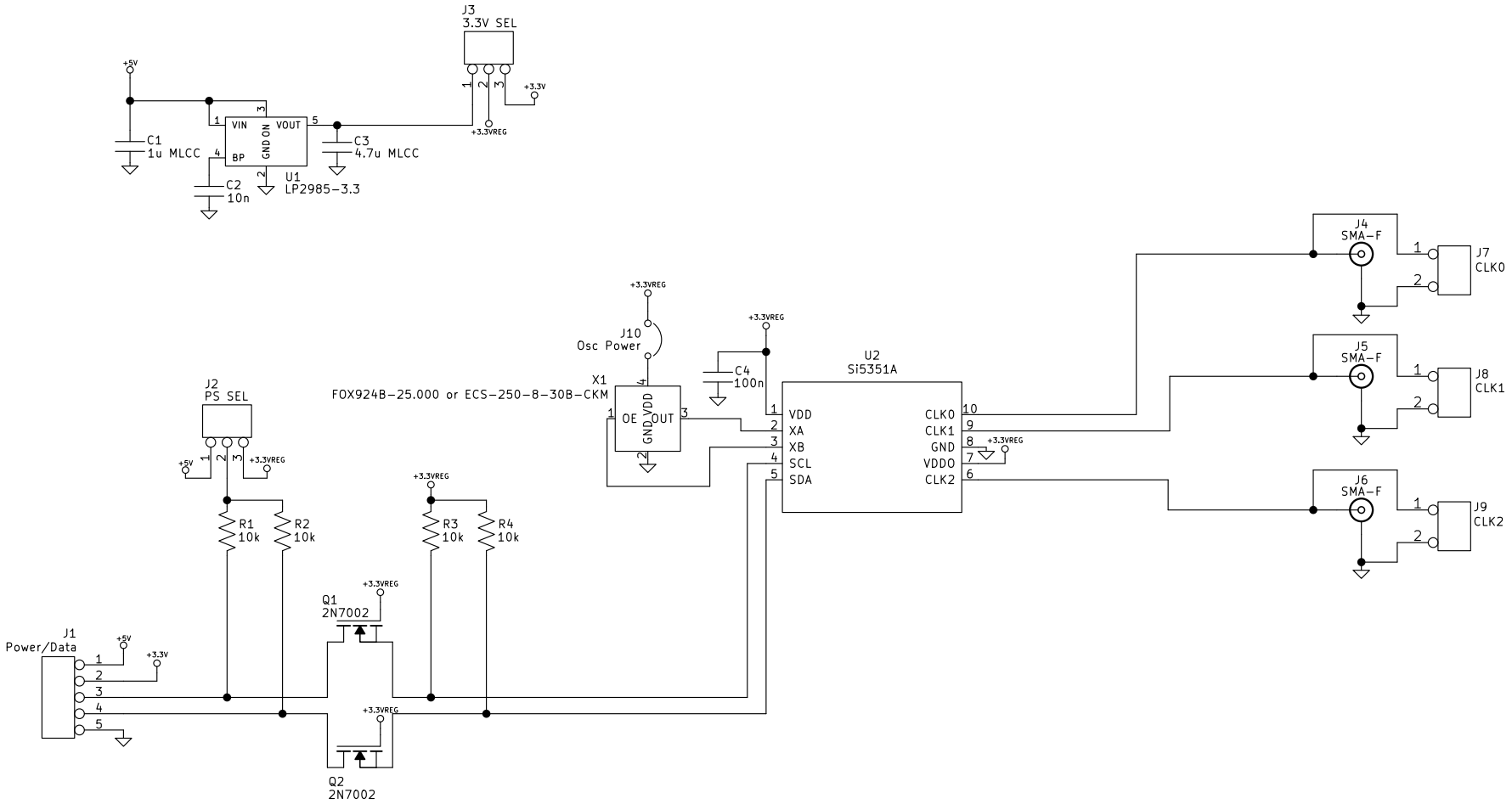

Creative Commons Licence CC-BY-SA

Etherkit

Sheet: /
File: Si5351ABreakout.sch

Title: Si5351A Breakout

Size: USLetter	Date: 15 Jan 2015	**Rev: C**
KiCad E.D.A. eeschema (2014-03-19 BZR 4756)-product		Id: 1/1