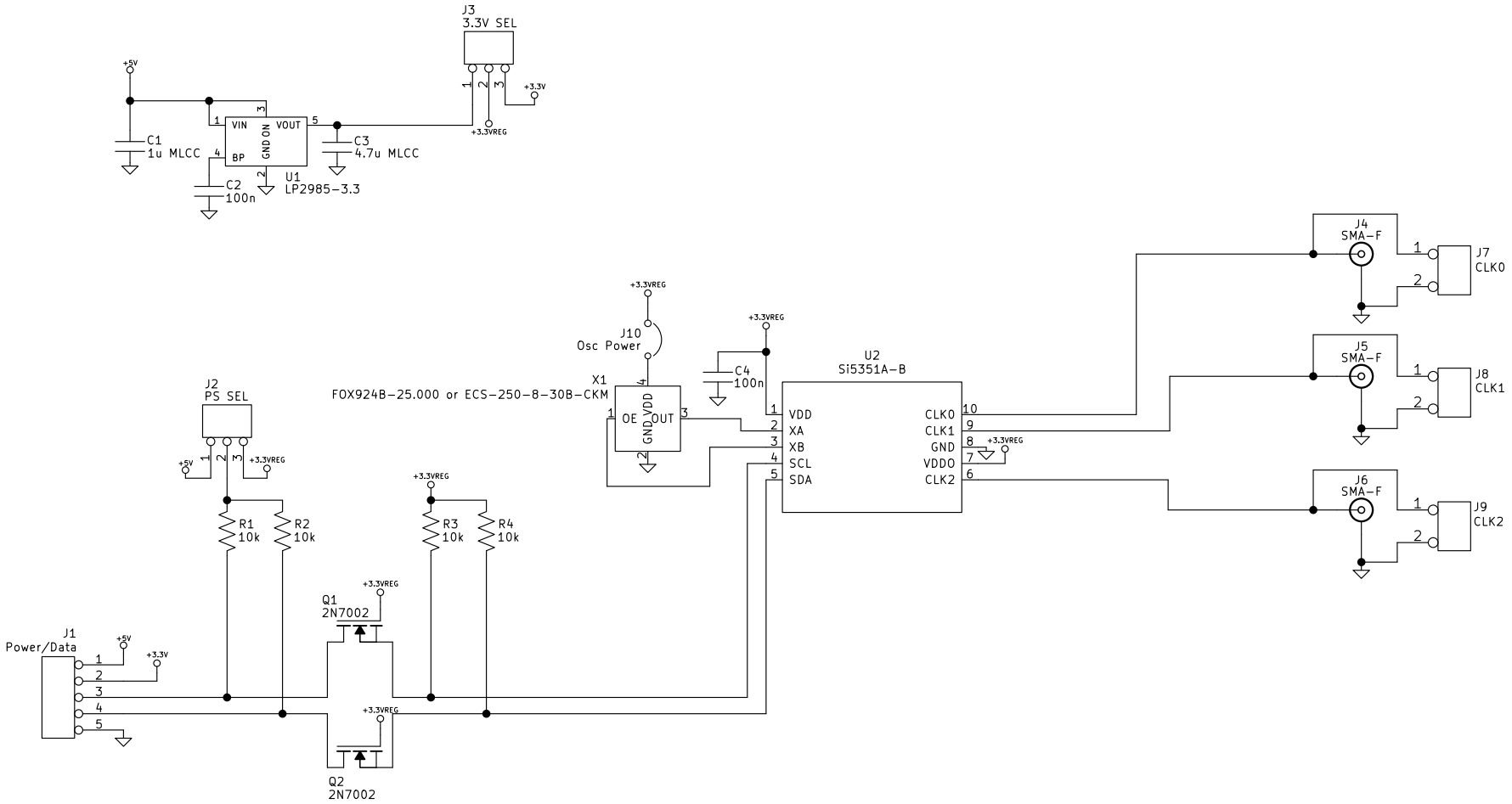

Creative Commons Licence CC-BY-SA

Etherkit

Sheet: /

File: Si5351ABreakout.sch

Title: Si5351A Breakout

Size: USLetter	Date: Sun 15 Feb 2015	**Rev: C**
KiCad E.D.A. kicad 0.201501172016+537720ubuntu14.04.1-product		Id: 1/1