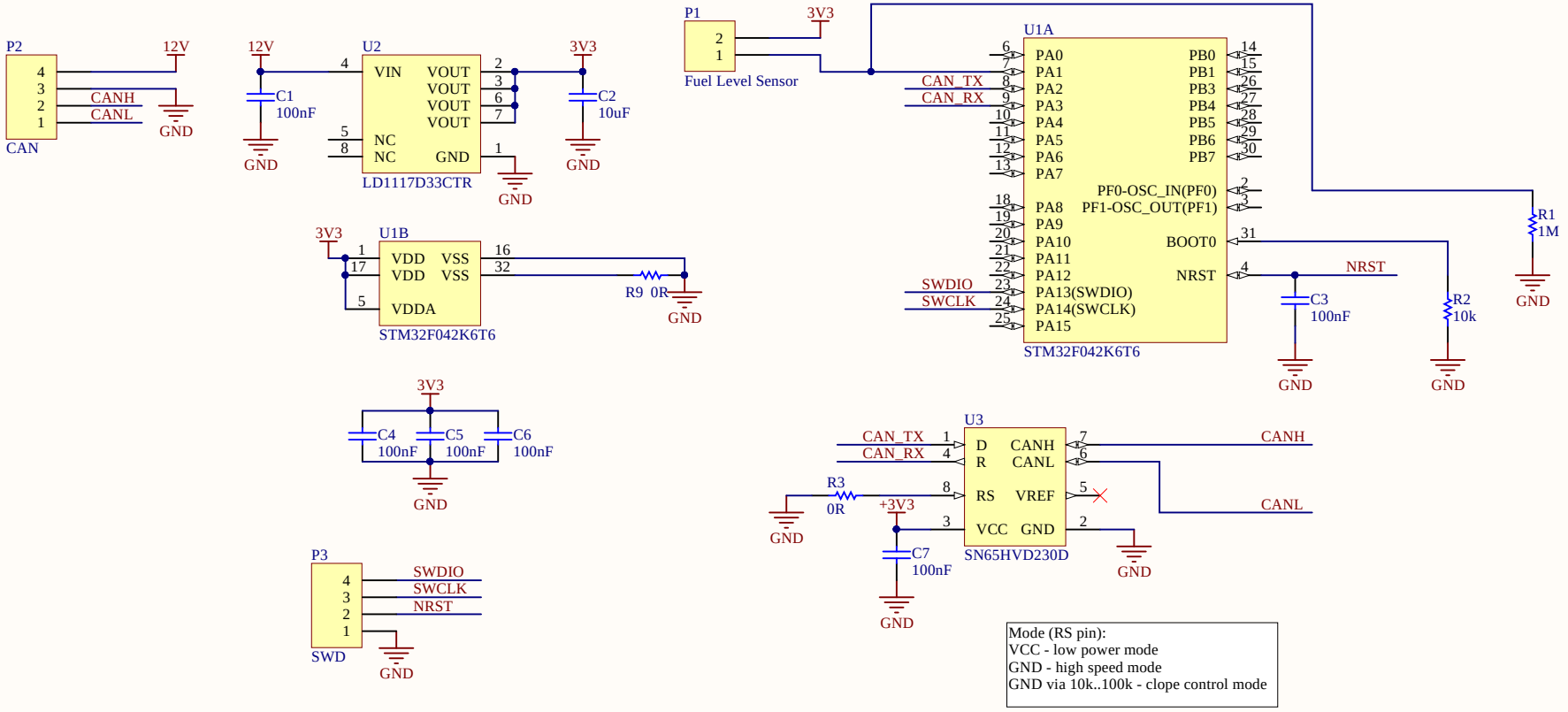

Mode (RS pin):
VCC - low power mode
GND - high speed mode
GND via 10k..100k - clope control mode

Confidential / Not for distribution !

Project name: FuelLevelSensor.PrjPcb

Document name: Main.SchDoc

Designer Name: Wojciech Grędel **Date/Time:** 2016-08-05 01:20:35 **Revision:** 1

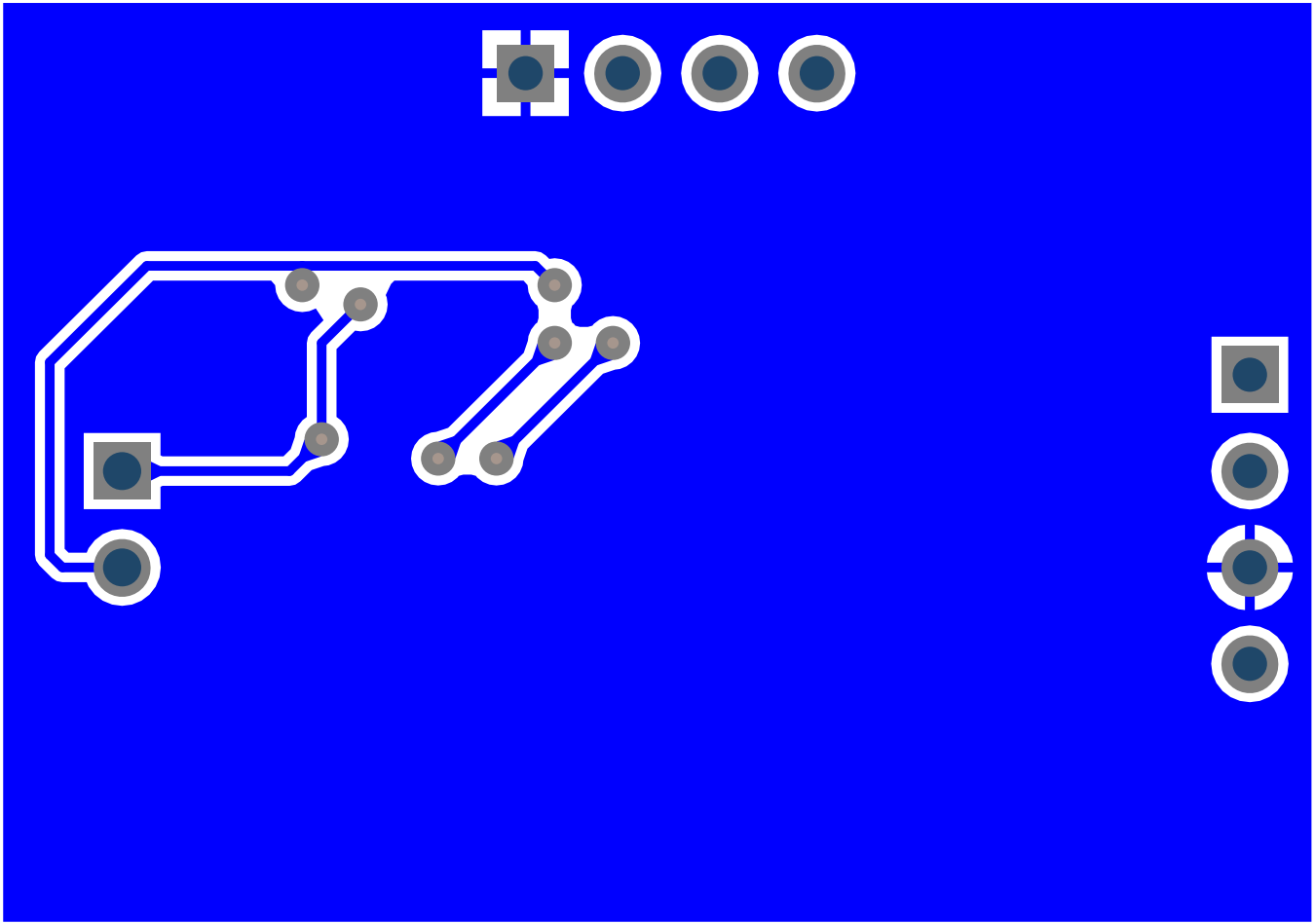

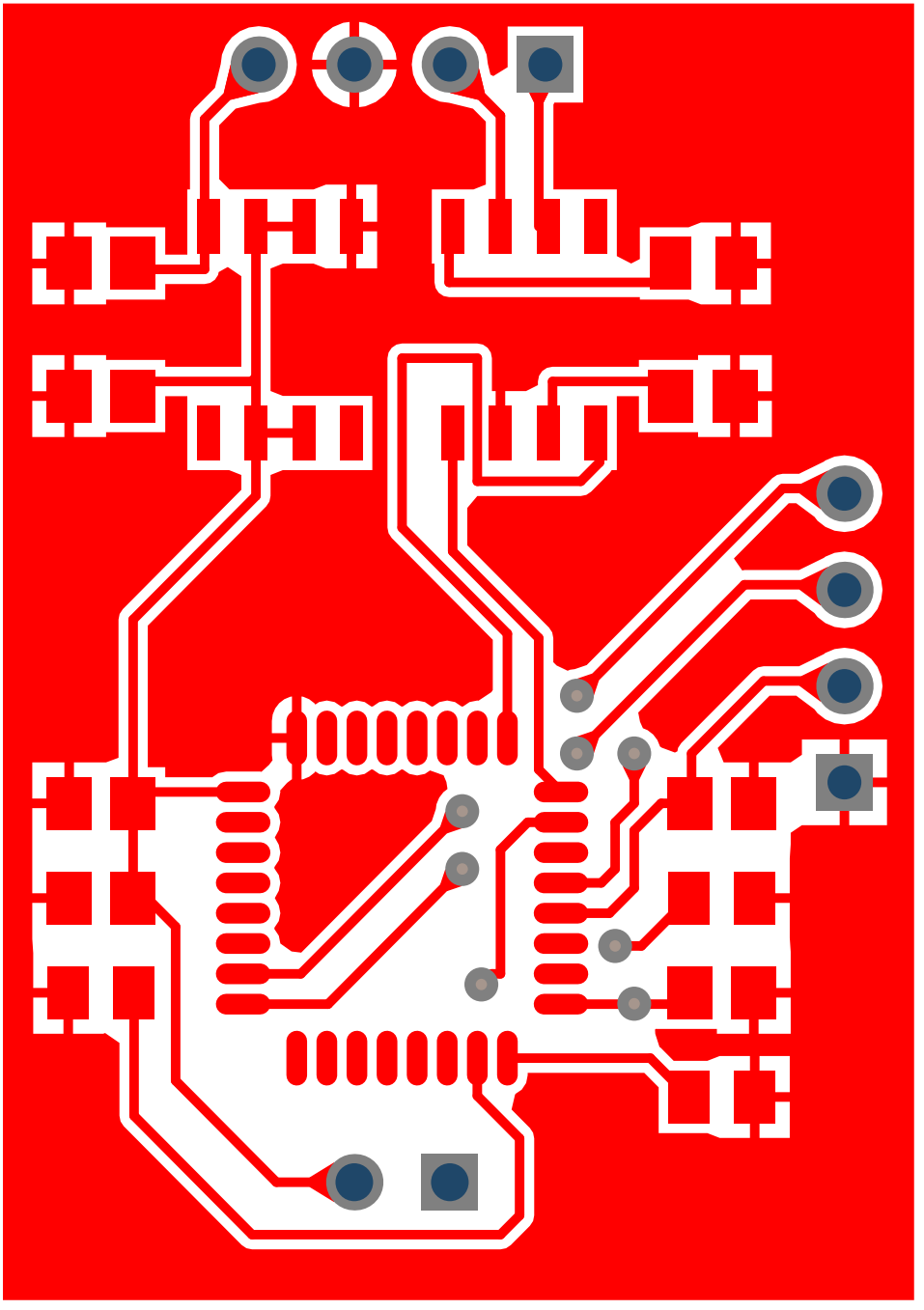

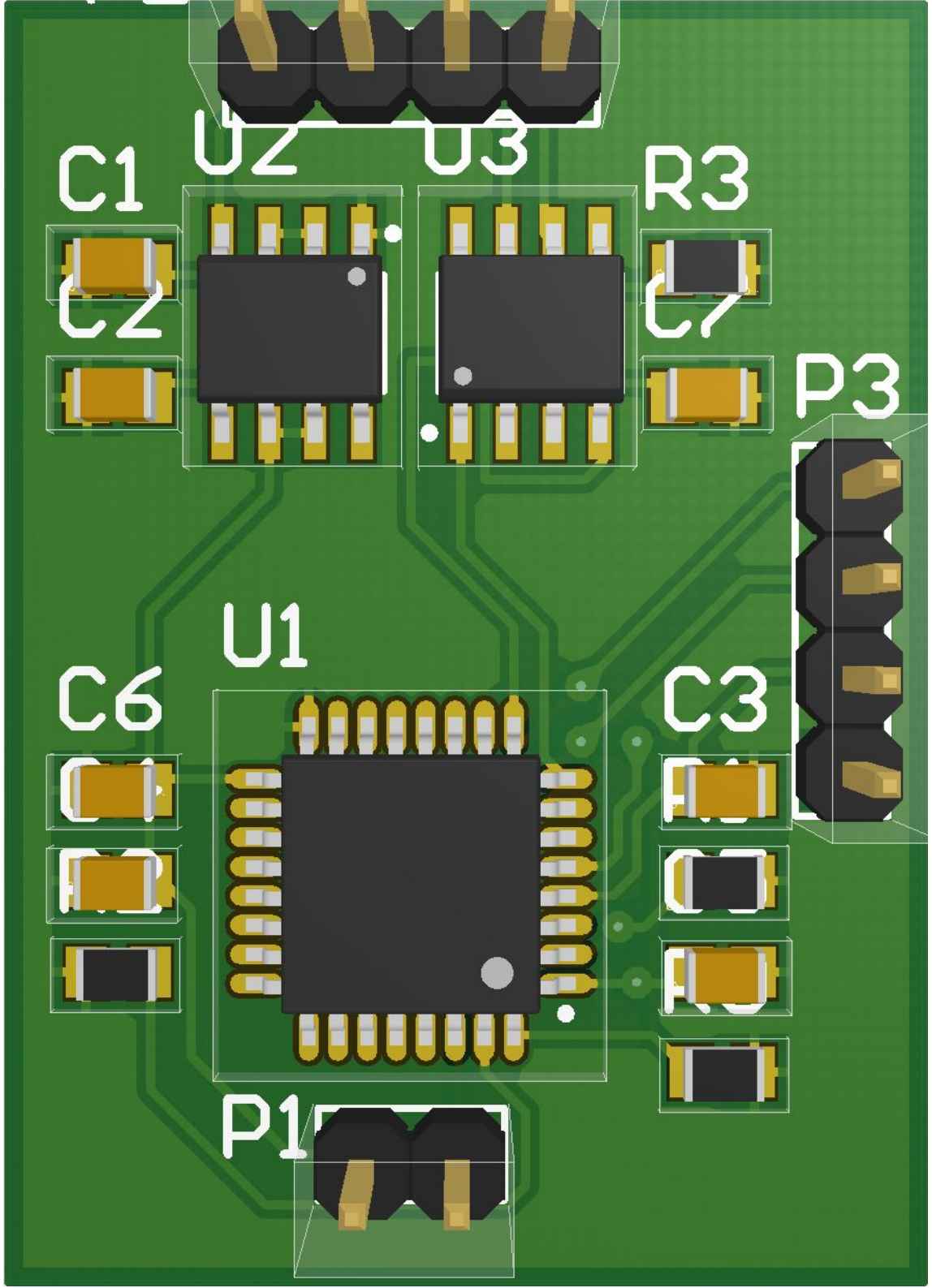
U2
U3
C1
R3
C2
C7
P3
U1
C6
C3
P1