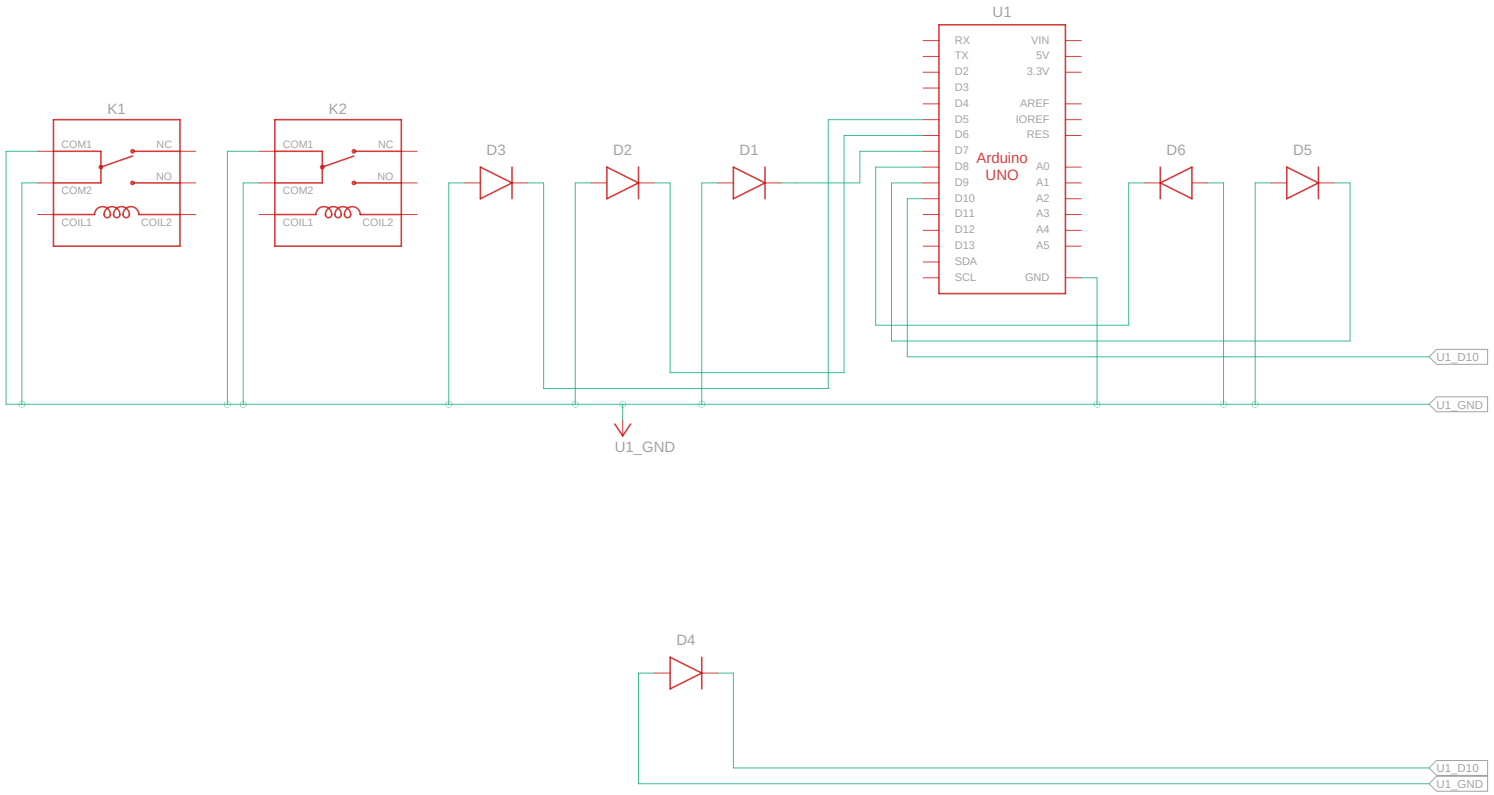

Made with Tinkercad®

Title: Brilliant Sango-Hango	
Date: 7/30/2024, 11:33:01 AM	Sheet: 1/1