USB and Power section

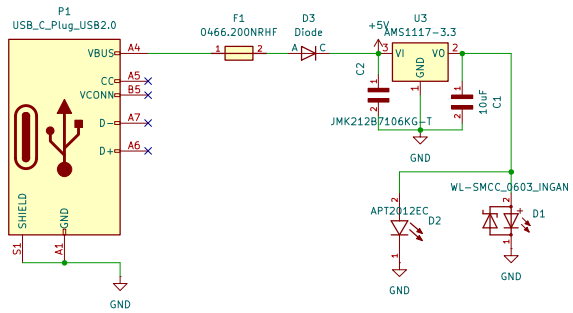

MOTOR_DRIVER

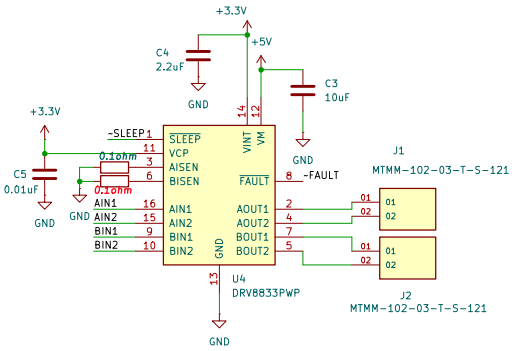

+5V PWR_FLAG

PWR_FLAG GND

VSDSQFM_SECTION

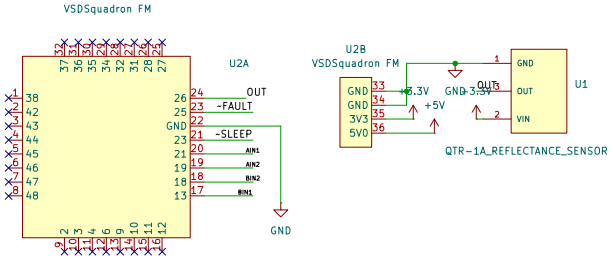

FFPGA_SHIELD_DESIGN

MAZE_SOLVER