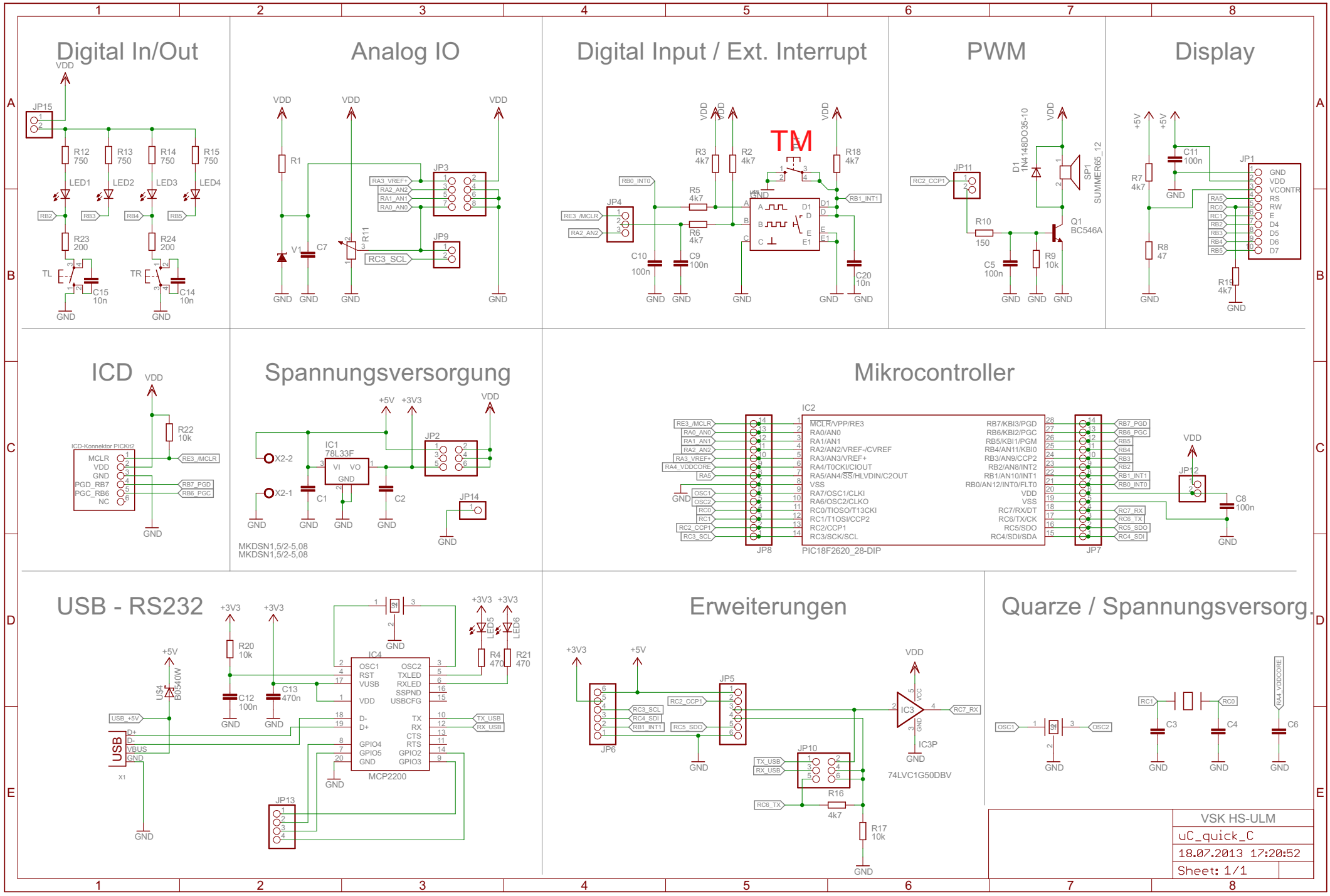
Digital In/Out
Analog IO
Digital Input / Ext. Interrupt
PWM
Display
ICD
Spannungsversorgung
Mikrocontroller
USB - RS232
Erweiterungen
Quarze / Spannungsversorg.
VSK HS-ULM
uC_quick_C
18.07.2013 17:20:52
Sheet: 1/1

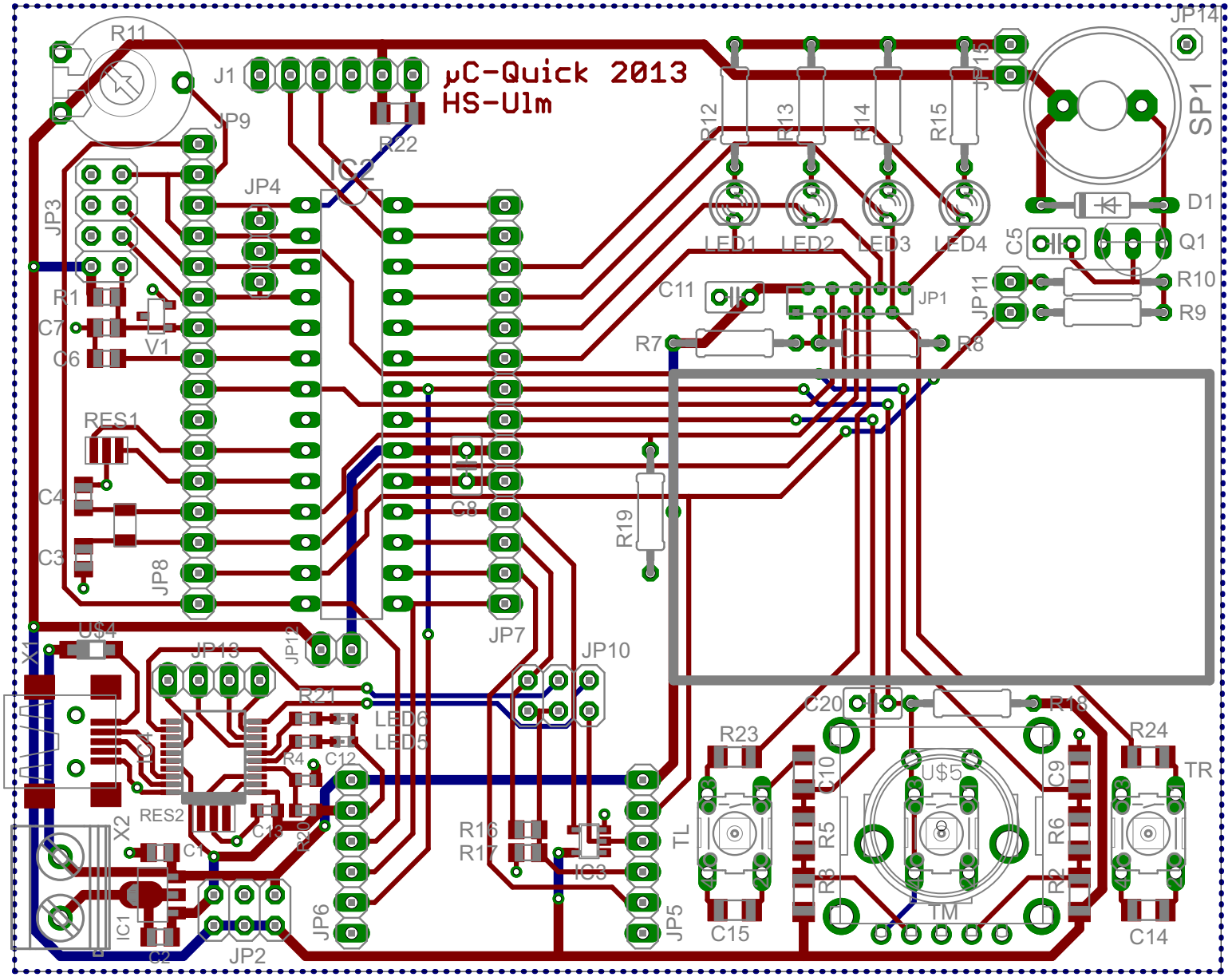
µC-Quick 2013
HS-Ulm
R11
J1
JP9
R22
IC2
JP4
JP3
R1
C7
C6
V1
RES1
C4
C3
JP8
U$4
X1
JP13
JP12
R21
LED6
LED5
R4
C12
RES2
C13
C1
X2
IC1
C2
JP2
JP6
JP7
C8
R19
JP10
R16
R17
IC3
JP5
TL
R12
R13
R14
R15
JP15
LED1
LED2
LED3
LED4
C5
C11
JP1
JP11
R7
R8
JP14
SP1
D1
Q1
R10
R9
C20
R18
R23
C10
U$5
C9
R24
TR
R5
R6
R3
R2
TM
C15
C14

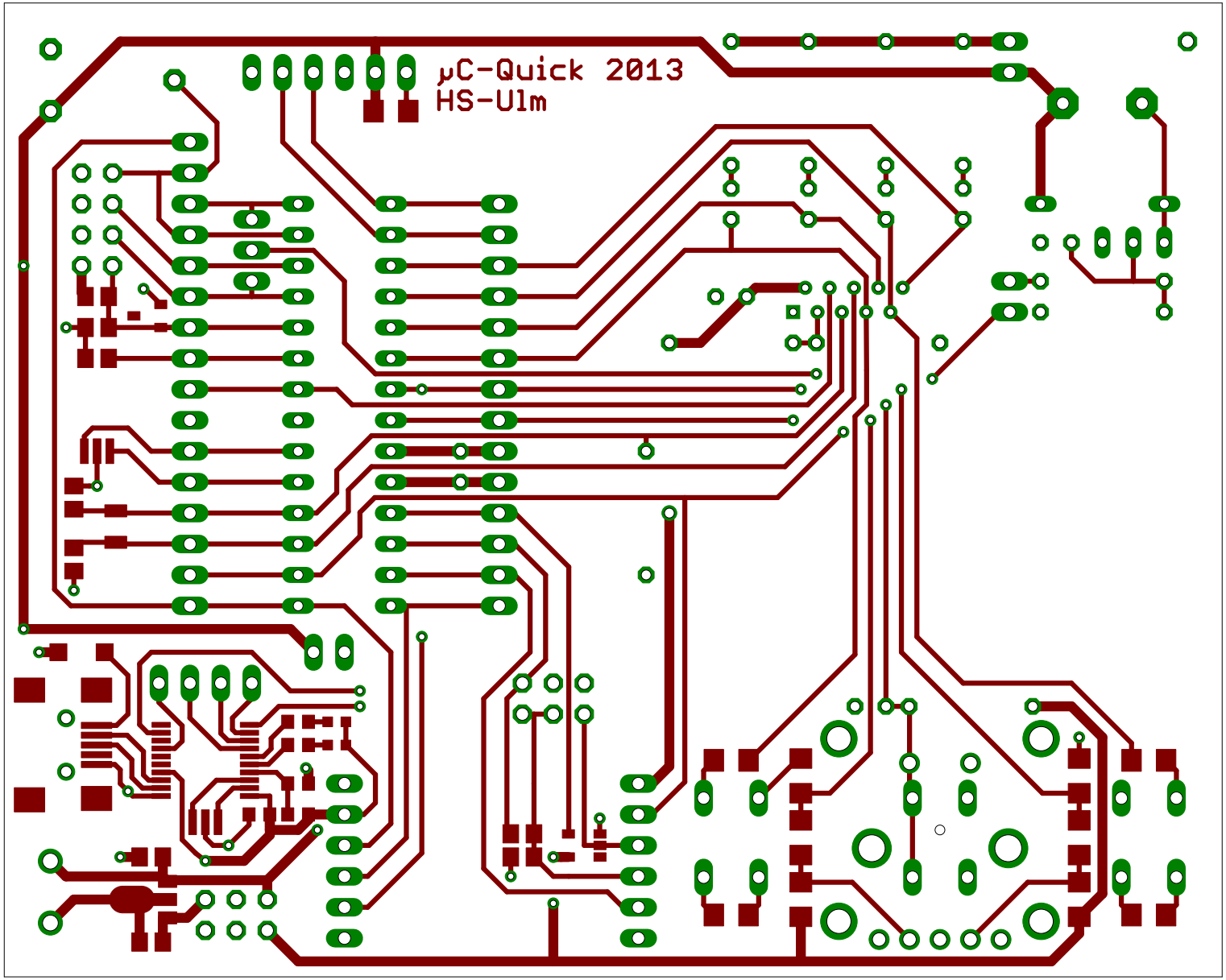
µC-Quick 2013
HS-Ulm

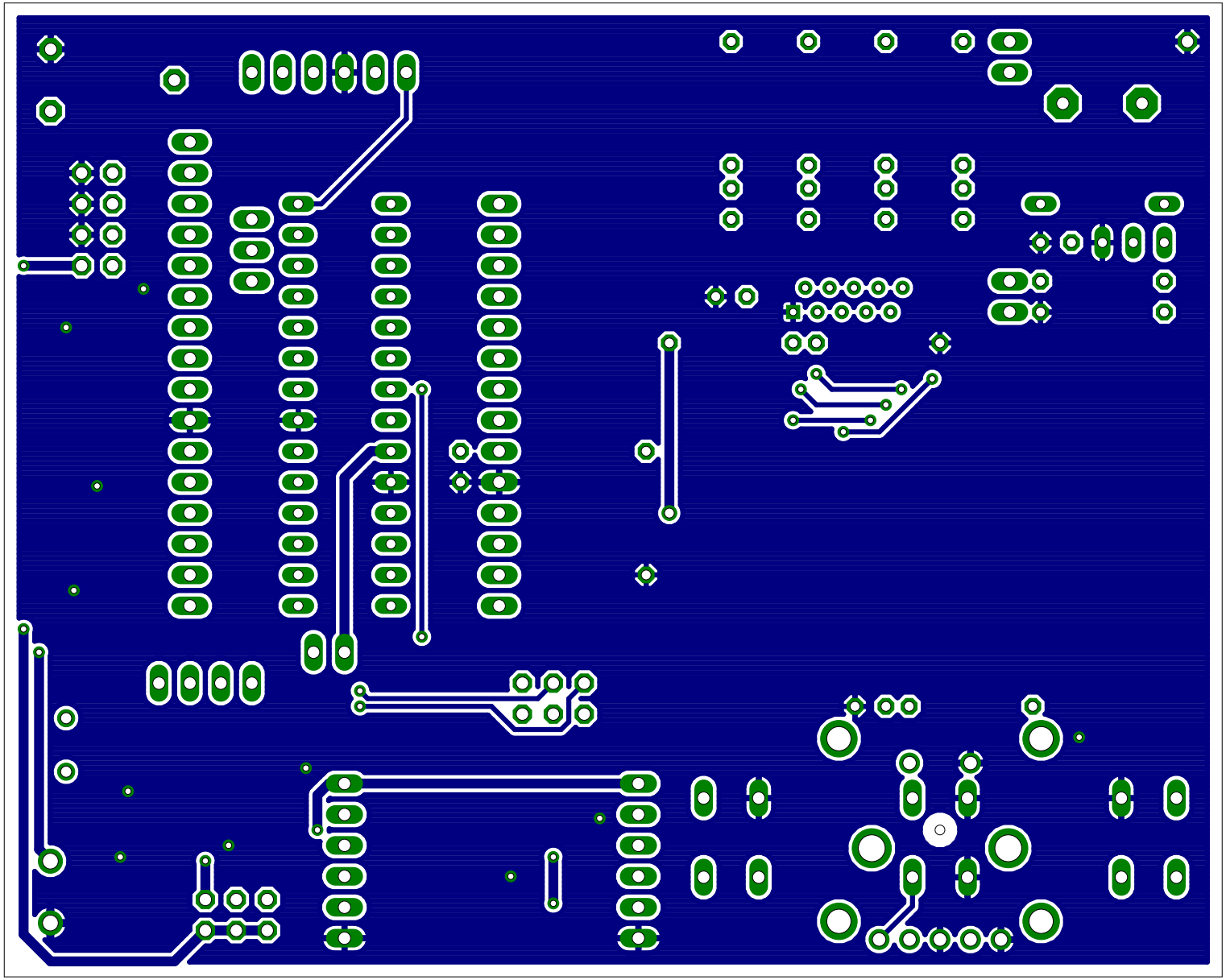

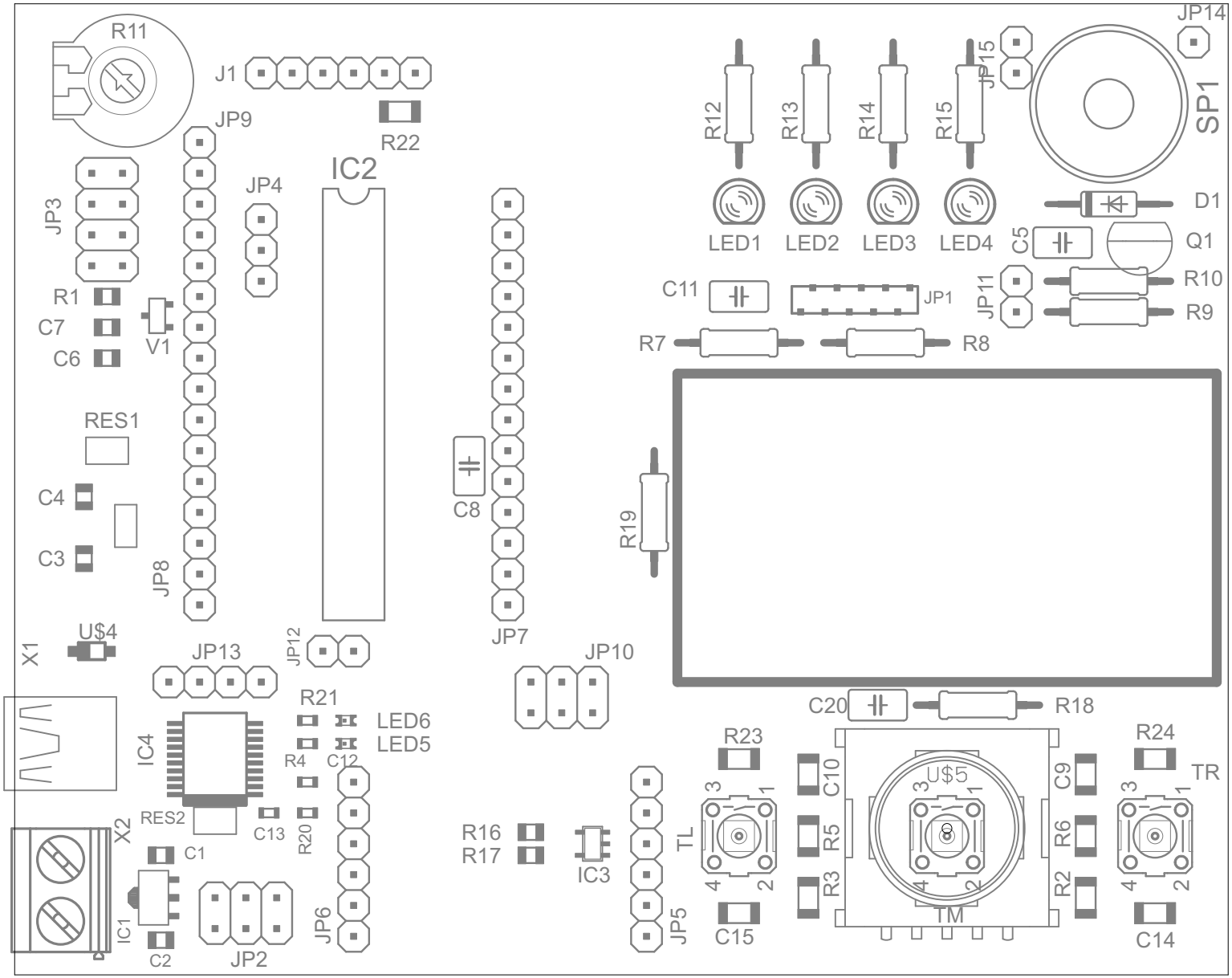
R11
J1
R22
JP9
IC2
JP4
JP3
R1
C7
C6
V1
RES1
C4
C3
JP8
C8
JP7
R19
U$4
X1
JP13
JP12
JP10
R21
LED6
LED5
IC4
R4
C12
RES2
C13
R20
X2
C1
IC1
C2
JP2
JP6
R16
R17
IC3
JP5
R12
R13
R14
R15
LED1
LED2
LED3
LED4
JP15
JP14
SP1
D1
C5
Q1
C11
JP1
JP11
R10
R9
R7
R8
C20
R18
R23
TL
C10
R5
R3
C15
U$5
TM
C9
R6
R2
R24
TR
C14

SUMMER65_12

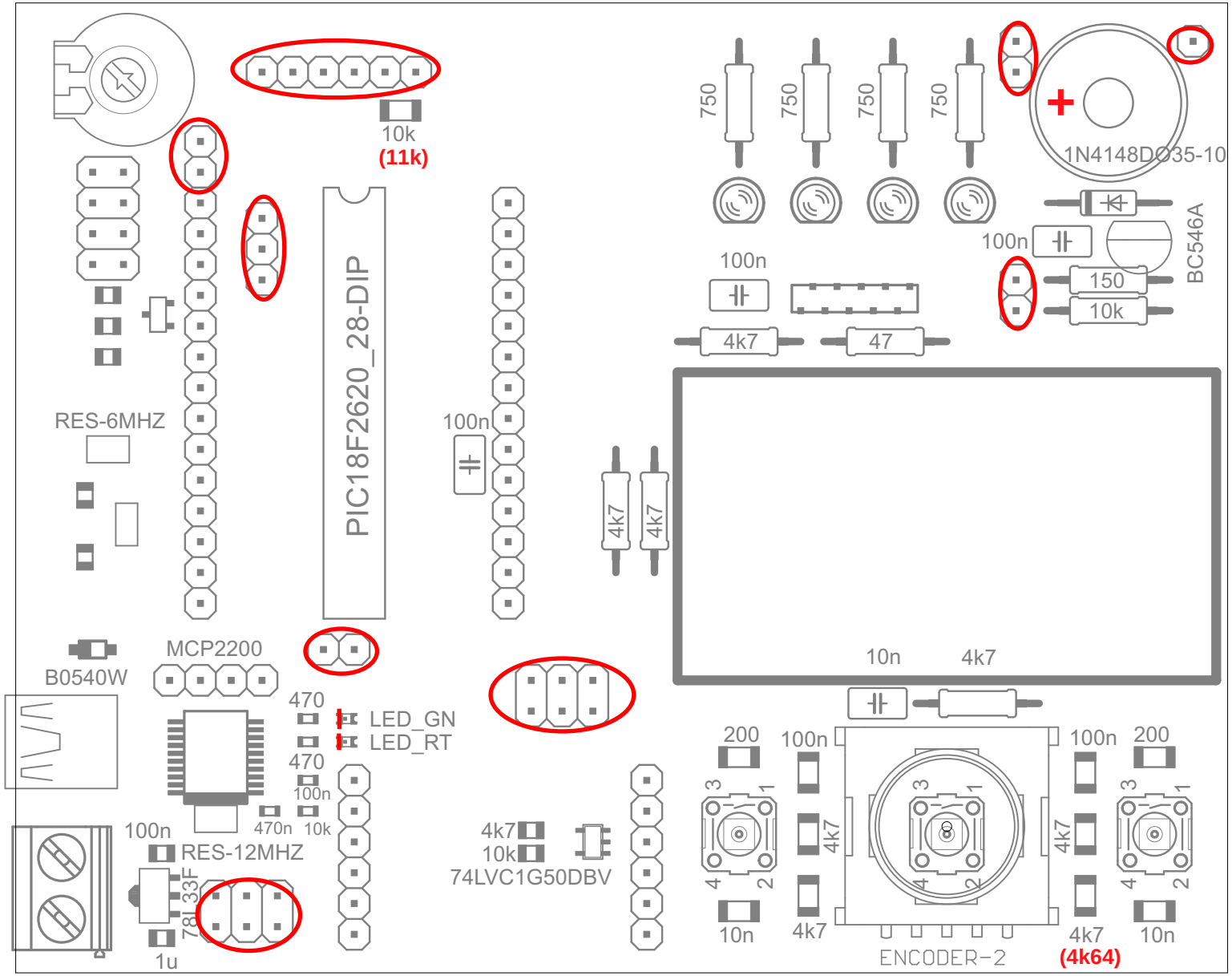

MKDSN1,5/2-5,08