10T Hybrid XOR-XNOR Full Adder Logic Style Performance Comparison

V. Shreya[#1], Yogeshwari K[#2], Vaishnavi PM[#3], Priyamvadha Ganesh[#4]

[#]*Vellore Institute of Technology, Chennai Campus*

Under the Guidance of Dr. S Umadevi

[1]shreya.v2023b@vitstudent.ac.in ; 23BEC1366

[2] yogeshwari.k2022@vitstudent.ac.in ; 22BEC1012

[3]vaishnavi.pm2023@vitstudent.ac.in ; 23BEC1445

[4] priyamvadha.ganesh2023@vitstudent.ac.in ;23BEC1449

Abstract—**This project focuses on the design, implementation, and comparative analysis of novel 10-transistor (10T) XOR-XNOR based hybrid full adder circuits, referred to as Hybrid Full Adder 1 and 2. The proposed adders are developed using a combination of XOR and XNOR logic gates optimized for minimal transistor count and power efficiency. These hybrid designs aim to reduce the overall power consumption, delay, and area compared to traditional full adder architectures.**

The full adders are implemented using CMOS 180nm technology, and performance metrics such as power dissipation, propagation delay, and area utilization are evaluated using simulation tools like Cadence Virtuoso. The results are benchmarked against the conventional Static CMOS full adder to highlight the improvements achieved through the hybrid approach.

The project demonstrates that the 10T XOR-XNOR based hybrid designs provide a better trade-off between power, delay, and area, making them suitable for low-power and high-speed VLSI applications, particularly in portable and battery-operated devices.

Keywords—10T Full Adder, XOR-XNOR Hybrid Logic, Low Power VLSI Design, Static CMOS, Transistor-Level Optimization

I. Introduction

In modern VLSI design, arithmetic circuits such as full adders play a crucial role as fundamental building blocks in digital systems like arithmetic logic units (ALUs), processors, and digital signal processing (DSP) units. With the increasing demand for portable and battery-operated electronic devices, low power consumption, high speed, and reduced silicon area have become essential design considerations. Traditional full adder designs using static CMOS logic offer reliable operation but at the cost of higher power dissipation and transistor count.

To address these challenges, researchers have focused on optimizing adder architectures by minimizing the number of transistors and using efficient logic styles. In this context, XOR and XNOR gates serve as critical components due to their significance in constructing the sum and carry outputs of a full adder. The use of hybrid logic combining XOR and XNOR gates enables the design of compact and energy-efficient full adder circuits.

This project presents the implementation of two novel 10-transistor (10T) hybrid full adder designs (Hybrid Full Adder 1 and Hybrid Full Adder 2), utilizing XOR-XNOR logic for optimized performance. The designs are evaluated and compared with the conventional static CMOS full adder architecture based on key parameters such as power consumption and propagation delay

By leveraging the advantages of hybrid logic and transistor-level optimization, the proposed 10T designs aim to strike an effective balance between low power operation, speed, and compactness, making them suitable for integration in energy-constrained and high-performance applications.

FIGURE I
DESIGN 1 CIRCUIT DIAGRAM

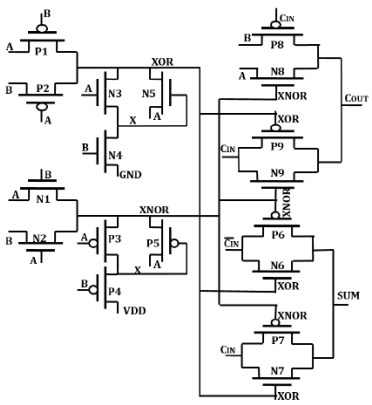

(a)

FIGURE II
DESIGN 2 CIRCUIT DIAGRAM

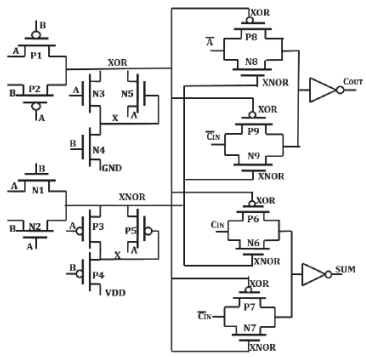

(b)

II. Literature Review

Jyoti Kandpal, Abhishek Tomar, Member, IEEE, Mayur Agarwal, Member, IEEE, and K. K. Sharma presented four innovative designs for implementing high-speed 10-transistor (10T) driven XOR-XNOR logic for a full adder cell. Their research emphasized optimizing the trade-off between speed, power, and transistor count, forming the foundation of this report. These designs are particularly significant for low-power and high-performance VLSI applications, where efficient logic gate implementation directly impacts system efficiency. The proposed 10T logic circuits were evaluated based on simulation results that revealed enhancements in delay and energy metrics compared to traditional designs. The adaptability of these designs in deep submicron processes further reinforces their utility in modern semiconductor environments.

A comprehensive study by Khatun et al. (2023) compared multiple hybrid full adder cells across varying technology nodes, including 180nm, using Cadence Virtuoso. Their work provided critical performance benchmarks in terms of delay, power, and power-delay product (PDP), essential for evaluating the scalability of adder designs across technology generations. Their simulations offered a valuable perspective on how hybrid logic structures behave under different node constraints. This study also emphasized the importance of PDP as a holistic metric in assessing both speed and energy efficiency. By establishing a baseline, their findings serve as a reference point for future optimization efforts.

Annarose et al. (2022) conducted a comparative analysis between MOSFET and FINFET-based hybrid full adders in 180nm and 32nm technologies using Cadence Virtuoso. Their results showed that Transmission Gate Adders consistently outperformed other hybrid designs in terms of delay, especially at scaled-down nodes. The study shed light on the advantages of FINFETs in minimizing short-channel effects while enhancing switching speed. Additionally, the paper discussed the impact of parasitic capacitance and leakage current in different device architectures. Their findings support the adoption of FINFET technology in delay-sensitive applications where high performance is critical.

Maryan et al. (2021) introduced a technique employing input-controlled leakage restrainer (ICLR) transistors to mitigate leakage and short-circuit power in 1-bit hybrid full adders. Their work, based on deep submicron CMOS processes, demonstrated significant reductions in static and dynamic power consumption. By strategically integrating ICLR transistors, they managed to enhance energy efficiency without compromising logic functionality. Their methodology highlighted the importance of low-leakage design in ultra-low-power applications like IoT and biomedical devices. The results confirm that intelligent transistor-level modifications can yield measurable benefits in compact digital circuits.

Kishore and Krishna (2023) investigated the design of a Voltage Difference Transconductance Amplifier (VDTA) using both GPDK 180nm and FINFET technologies within the Cadence Virtuoso environment. Their comparison underscored the advantages of advanced transistor geometries in achieving superior power efficiency. The VDTA, being a critical analog building block, benefited from FINFET's reduced leakage and higher drive strength. Their work also highlighted design trade-offs in terms of complexity and layout constraints across different technologies. The study offers a nuanced understanding of how design strategies must evolve with technological scaling.

III. Circuit Simulations and Methodology

The three circuits taken into consideration are the static-CMOS designed 28 transistor full adder, design 1 which contains one variant of the 10T XOR-XNOR driven full adder cell and design 2 which is also another variant of a similarly driven full adder cell. First, the circuits were designed by generating the Cadence schematics and the outputs were verified by input stimulus.

A. 28T Full Adder

The simplified full adder using 28T logic has been implemented using static CMOS logic using the Cadence tools. The schematic is as follows:

FIGURE I
28T Static CMOS Full Adder Schematic

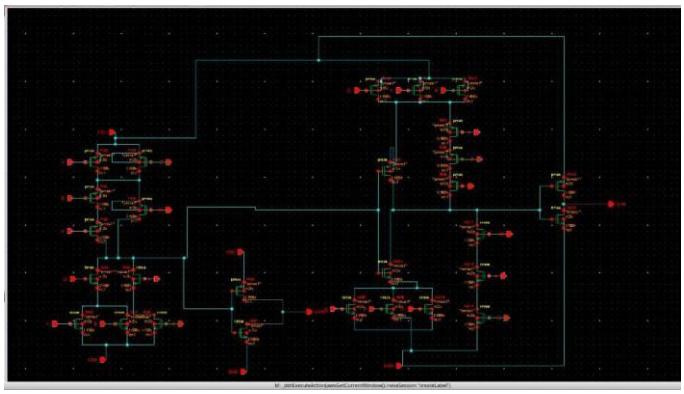

This circuit has been simulated to verify its functionality. The simulation graph generated is pasted as follows:

FIGURE II
28T Static CMOS Simulation

B. Design 1 Full Adder

The first design that is taken into consideration is as follows:

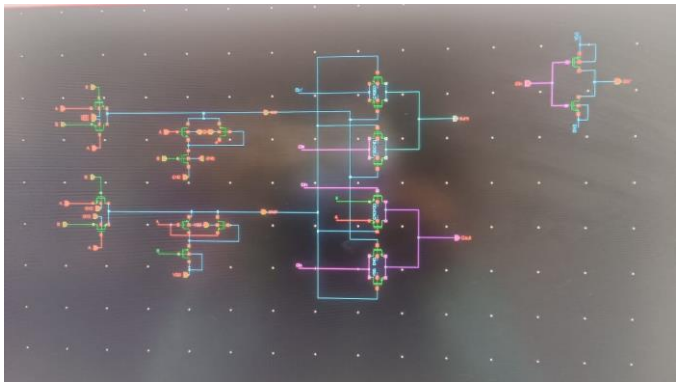

The functionality of the circuit has been verified by input stimuli. The results are plotted in a graph as follows:

FIGURE VI
DESIGN SIMULATION

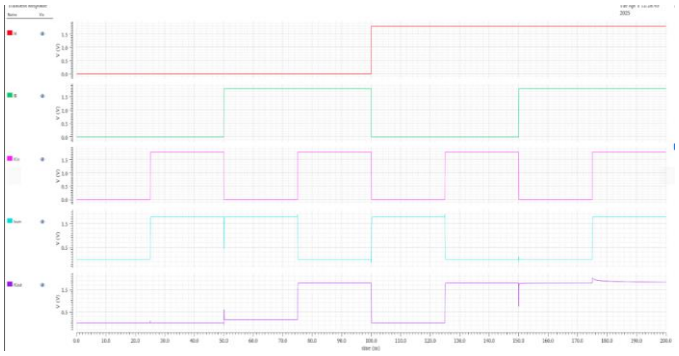

C. Design 2 Full Adder

The second design taken for comparison is as follows:

FIGURE VII
DESIGN SIMULATION

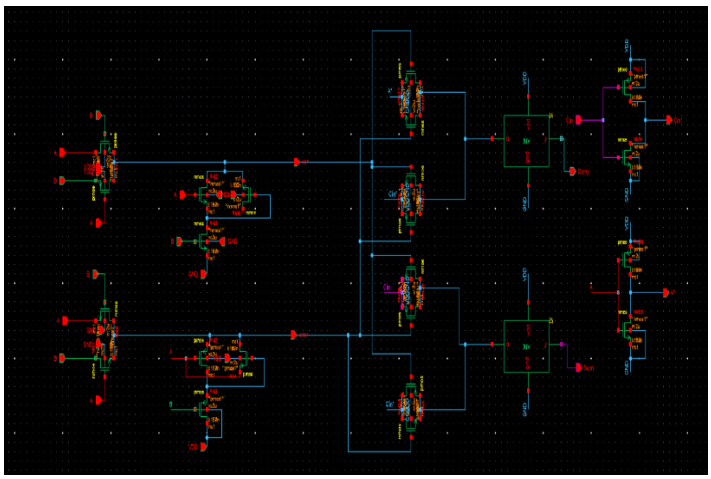

Again, by stimulating inputs, the functionality of the full adder was verified as follows:

FIGURE VIII
DESIGN 2 SIMULATION

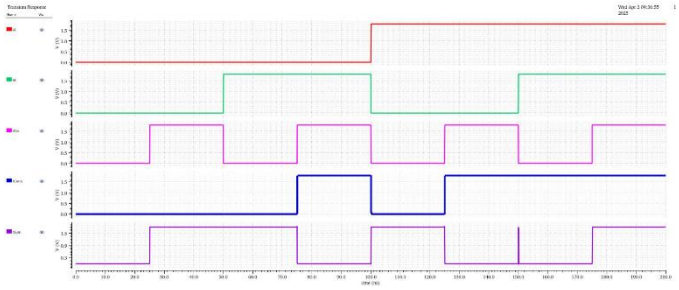

The circuits were compared based on these performance metrics:

- Delays for alternating inputs
- Overall average power consumed for computation The power spectrums have also been generated, and the waveform was used to find out the average power of the respective full adder circuits. All the power spectrums are as follows:

FIGURE IX

28T FULL ADDER POWER SPECTRUM
SUM

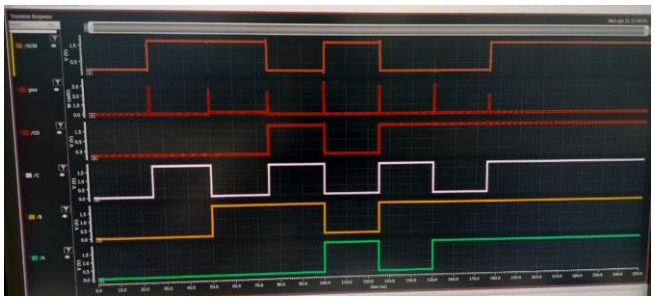

CARRY

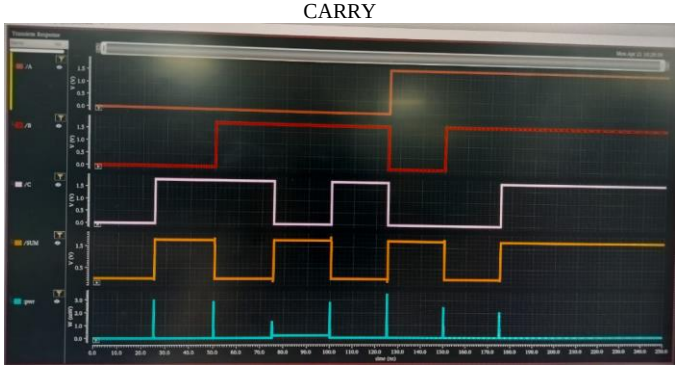

FIGURE X
DESIGN 1 POWER SPECTRUM
SUM

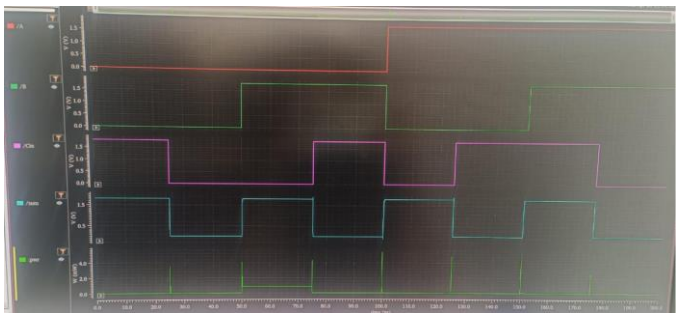

CARRY

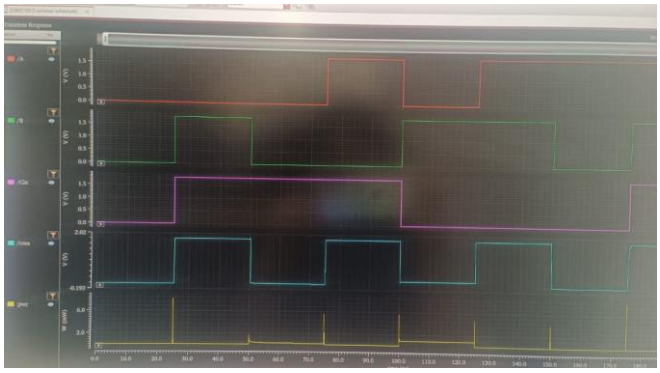

FIGURE XI
DESIGN 2 POWER SPECTRUM
SUM

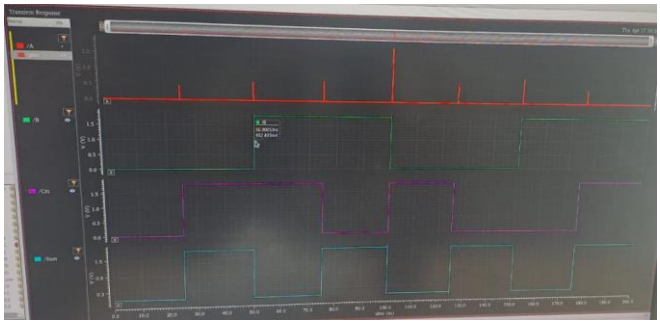

CARRY

IV. COMPARISON RESULTS AND DISCUSSION

The comparison metrics are evaluated using Cadence calculator formulae. The input patterns for the sum and carry are same for all the three full adder cells. The input patterns are stimulated in such a way that the outputs toggle to get the rising and falling edges. The delays are calculated with the respective edges between input and output waveforms.

A. 28T Full Adder

The 28-transistor full adder cell is already implemented, and the outputs are verified. The delays are calculated for toggling outputs. All the results have been tabulated in Table V and Table VI.

B. Design 1 Full Adder Cell

The circuit schematic given in Figure I is implemented on Cadence by designing the schematic and then with the same input stimulus as 28T full adder, the delays are compared, and the powers were evaluated as well. The delays are tabulated in Table III and Table IV.

TABLE I: DESIGN 2 SUM DELAYS

Input Patterns			Output	Delays (in pico-seconds)
A	B	C		
0	0	0	0	48.611
0	0	1	1	74.48
0	1	1	0	52.44
0	1	0	1	73.76
1	0	1	0	32.38
1	1	0	1	72.68
1	1	1	0	68.31
1	0	0	1	51.76

TABLE II

TTABLE II: DESIGN 2 CARRY DELAYS

Input Patterns			Output	Delays (in pico-seconds)
A	B	C		
0	0	0	0	60.24
0	1	1	1	49.54
0	0	1	0	43.41
1	0	1	1	53.84
0	1	0	0	47.54
1	1	0	1	57.97
1	0	0	0	49.20
1	1	1	1	54.78

TABLE III

DESIGN 1 SUM DELAYS

Input Patterns			Output	Delays (in pico-seconds)
A	B	C		
0	0	1	1	49.94
0	0	0	0	51.05
0	1	1	1	50.01
0	1	0	0	49.98
1	0	1	1	50.09
1	0	0	0	68.84
1	1	0	1	25.07
1	1	1	0	58.27

TABLE IV
DESIGN 1 CARRY DELAYS

Input Patterns			Output	Delays (in pico-seconds)
A	B	C		
0	0	0	0	49.96
0	1	1	1	88.24
0	0	1	0	49.93
1	0	1	1	52.77
0	1	0	0	50.07
1	1	0	1	85.99
1	0	0	0	76.35
1	1	1	1	45.24

TABLE V
28 T F.A SUM DELAYS

Input Patterns			Output	Delays (in pico-seconds)
A	B	C		
0	0	0	0	64.47
0	0	1	1	58.7
0	1	1	0	69.93
0	1	0	1	72.28
1	0	1	0	53.07
1	0	0	1	88.99
1	1	1	0	56.35
1	0	1	1	65.24

TABLE VI

28 T F.A. CARRY DELAYS

Input Patterns			Output	Delays (in pico-seconds)
A	B	C		
0	0	0	0	78.18
0	1	1	1	81.20
0	0	1	0	76.84
0	1	1	1	94.38
1	0	1	0	99.50
1	1	0	1	74.74
1	0	0	0	78.70
1	1	1	1	85.24

TABLE VII

AVERAGE POWERS

Design	Average Power (µW)
28T Full Adder	3.25
Design 1	7.009
Design 2	7.59

C. Design 2 Full Adder Cell

The circuit schematic given in Figure I is implemented on Cadence by designing the schematic and then with the same input stimulus as 28T full adder, the delays are compared, and the powers were evaluated as well. The delays are tabulated in Table I and Table II.

D. Delay Comparison and Discussions

1) *28T Full Adder:* With the delays tabulated, the average delay of sum is evaluated to be 66. Similarly, the average delay for carry is 83.59.

2) *Design 1 Full Adder Cell*: With the delays tabulated, the average delay of sum is evaluated to be 44.15. Similarly, the average delay evaluated for carry is 62.31.

3) *Design 2 Full Adder Cell:* With the delays tabulated, the average delay of sum is evaluated to be 59.30. Similarly, the average delay evaluated for carry is 52.065.

E. Powers

From Table VII, it can be inferred that the 28T Full Adder gives the least power. The 10T XOR-XNOR logic designs produce lesser delays but generates more power. This power is evaluated using the average function on the power spectrum graphs. The power spectrums for all the three circuits are given in Figure IX, X and XI, respectively.

F. Results

From the average powers, the following inferences can be made:

- 28T full adder consumes the most power among the three designs.
- 28 T F.A. takes up the most power, taking close to 13.25 µW as it has a greater number of transistors compared to design 1 & 2 so the RC delay is much higher.
- Between Design 1 &2, Design 2 takes up more power as it uses both NMOS and PMOS transistors and since PMOS is more resistive than NMOS it slows down the charging thus leading to more power and delay while Design 1 uses PTL logic for calculating sum which uses only NMOS so RC delay is lesser
- But Design 2 and 28 T produces a much cleaner output than Design 1 since it uses TG and static CMOS methods respectively.

From the delays calculated, the following inferences can be made:

- The average delays in sum of design 1 and 2 are significantly lesser than the 28T full adder, proving its high-speed characteristics.
- Thus, depending on the requirement of the project, an appropriate choice can be made between these full adder designs.

V. ACKNOWLEDGMENT

We would like to express my sincere gratitude to Dr. S Umadevi, whose invaluable guidance, support, and encouragement have been instrumental throughout the course of this research. Her expertise and insights in the field of VLSI design were crucial in shaping the direction and outcome of this project.

We extend my heartfelt thanks to Mr. Mohanaprasad, Head of the Department, for providing a conducive academic environment and for his constant support during the project. We are also deeply grateful to Dr. Ravi Shankar, Dean, for his encouragement and for facilitating the necessary resources that enabled the smooth execution of this research.

We would also like to acknowledge the VIT Chennai Laboratory facilities, particularly for the provision and access to Cadence Design Tools, which were essential for the design, simulation, and analysis phases of this VLSI project. We would also like to sincerely thank all the authors of this project report for their dedication.

Lastly, I thank all the faculty and staff members of the department for their continuous support and cooperation.

REFERENCES

1. *J. Kandpal, A. Tomar, M. Agarwal and K. K. Sharma, "High-Speed Hybrid-Logic Full Adder Using High-Performance 10-T XOR–XNOR Cell," in IEEE Transactions on Very Large Scale Integration (VLSI) Systems, vol. 28, no. 6, pp. 1413-1422, June 2020*

2. *A. P. Chandrakasan, S. Sheng, and R. W. Brodersen, "Low-power CMOS digital design," IEICE Trans. Electron., vol. 75, no. 4, pp. 371–382,1992.*

3. *S. Goel, A. Kumar, and M. A. Bayoumi, "Design of robust, energyefficient full adders for deep-submicrometer design using hybrid-CMOS logic style," IEEE Trans. Very Large Scale Integr. (VLSI) Syst., vol. 14, no. 12, pp. 1309–1321, Dec. 2006.*

4. *C.-H. Chang, J. Gu, and M. Zhang, "A review of 0.18-µm full adder performances for tree structured arithmetic circuits," IEEE Trans. Very Large Scale Integr. (VLSI) Syst., vol. 13, no. 6, pp. 686–695, Jun. 2005.*

5. *N. Zhuang and H. Wu, "A new design of the CMOS full adder," IEEE J. Solid-State Circuits, vol. 27, no. 5, pp. 840–844, May 1992.*