TAOGLAS

Datasheet

SMD Mount Receptacle

Part No:
RECE.20279.001E.01

Description:

SMD U.FL Compatible Receptacle

Compatible with I-PEX MHFI, I-PEX MHFII, I-PEX MHFHT, Hirose U.FL, UMC

Features:

Mating Height: 3mm Max

Supplied on Tape & Reel 5000pcs per reel

Dimensions: 3 x 3 x 1.25 mm

Diameter: 2mm

RoHS & Reach Compliant

1.	Introduction	3
2.	Specifications	4
3.	Connector Data	6
4.	Mechanical Drawing	7
5.	Footprint	8
6.	Solder Reflow Profile	9
7.	Packaging	10
	Changelog	12

Taoglas makes no warranties based on the accuracy or completeness of the contents of this document and reserves the right to make changes to specifications and product descriptions at any time without notice. Taoglas reserves all rights to this document and the information contained herein. Reproduction, use or disclosure to third parties without express permission is strictly prohibited.

Ireland ISO 9001: 2015 Certified

Taiwan ISO 9001: 2015 Certified

1. Introduction

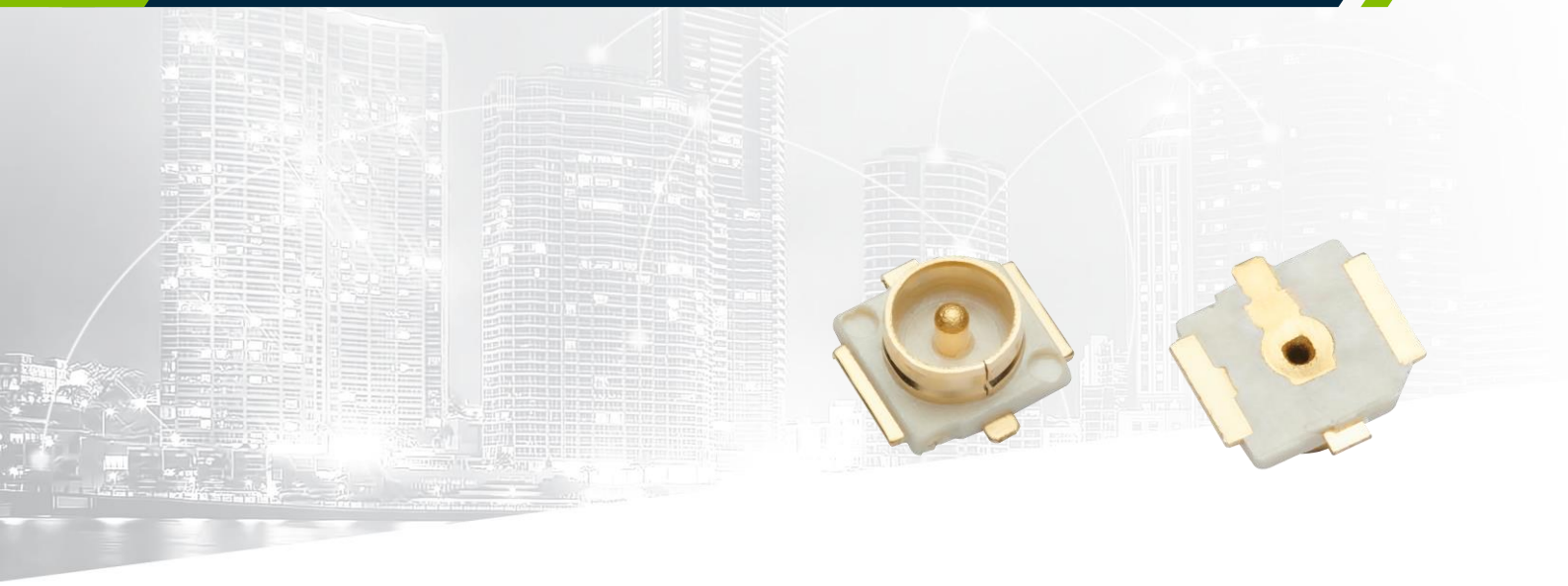

Part of the Taoglas SMD Mount Receptacle, the RECE.20279.001E.01 is a 3-pad type wire-to-board SMD receptacle that is ultra-small, lightweight and low profile, 2.5mm max. With an operational frequency range of DC to 6 GHz the RECE.20279.001E.01 is gold plated to provide superior performance and allow for ease of mounting with the male RF connector.

Packaged on tape and reel, this receptacle is designed to be placed with automatic “pick and place” equipment for ease of assembly.

The RECE.20279.001E.01 acts as a 50 Ohm transmission line to connect the micro-miniature RF connector to the printed circuit board. It is fully compatible with I-PEX MHFI, I-PEX MHFII, I-PEX MHFHT, Hirose U.FL and all other available U.FL compatible connectors .

Applicable Technologies:
The RECE.20279.001E.01 receptacles are commonly integrated into cellular, GPS and wireless LAN modules.

For further information, please contact your regional Taoglas customer support team.

2. Specifications

Electrical	
Operation Frequency	DC to 6 GHz
VSWR	1.3 Max at DC~3 GHz
	1.4 Max at 3~6 GHz
Nominal Impedance	50 Ohm
Rated Voltage	60V AC
Rated Current	1A Max.
Contact Resistance	Subject mated contacts assembled in housing to 20mV Max. open circuit at 10mA Max
Withstand Voltage	AC 200V/minute
Insulation Resistance	Impressed voltage 100V DC for 1min Initial：500MΩ Min. Final：100MΩ Min.
Dielectric Withstanding Voltage	200V AC for 1 minute
Current leakage	0.5mA Max
Temperature	-40 to +90°C

Material	
Outer Contact	Copper Alloy (Au plating)
Centre Contact	Copper Alloy (Au plating)
Insulator	LCP UL94V-0

Environmental	
Durability per EIA-364-09C - (2-3 cycles per min @ 30 cycles)	
Vibration	10Hz -> 100Hz -> 10Hz for 20 mins.
Peak value of acceleration	1.5mm or 59m/s2 (6G)
Direction	3 Axis - 5 Cycles
Mechanical Shock	
Accelerate Velocity	735m/s2 (75G)
Waveform	Half-sine shock plus.
Duration	11m sec.
Direct Current	1mA
Direction	In ±X, ±Y and ±Z axes.
Cycle	3 cycles for each direction, totally 18 cycles

Thermal Shock (40°C for 30mins to 5~35°C for 5 minutes to 90°C for 30mins to 5~35°C for 5 minutes)	
Transition Time	5 minutes
Cycles	5
Humidity	90~95% RH
Temperature	40+/- 2°C
Duration	96 hours
Salt Water Spray	
Temperature	35+/- 2°C
Salt Water Density	5+/-1% (by weight)
Duration	48 Hours
High temperature life	90+/- 2°C for 96 hours
Cold temperature life	-40+/- 2°C for 96 hours
H2S gas	
Temperature	40+/-2°C
Relative Humidity	80 +/-5% RH
Gas H2S	3+/-1 ppm
Duration	96 Hours
Moister Sensitivity Level	2

3. Connector Data

3.1 VSWR

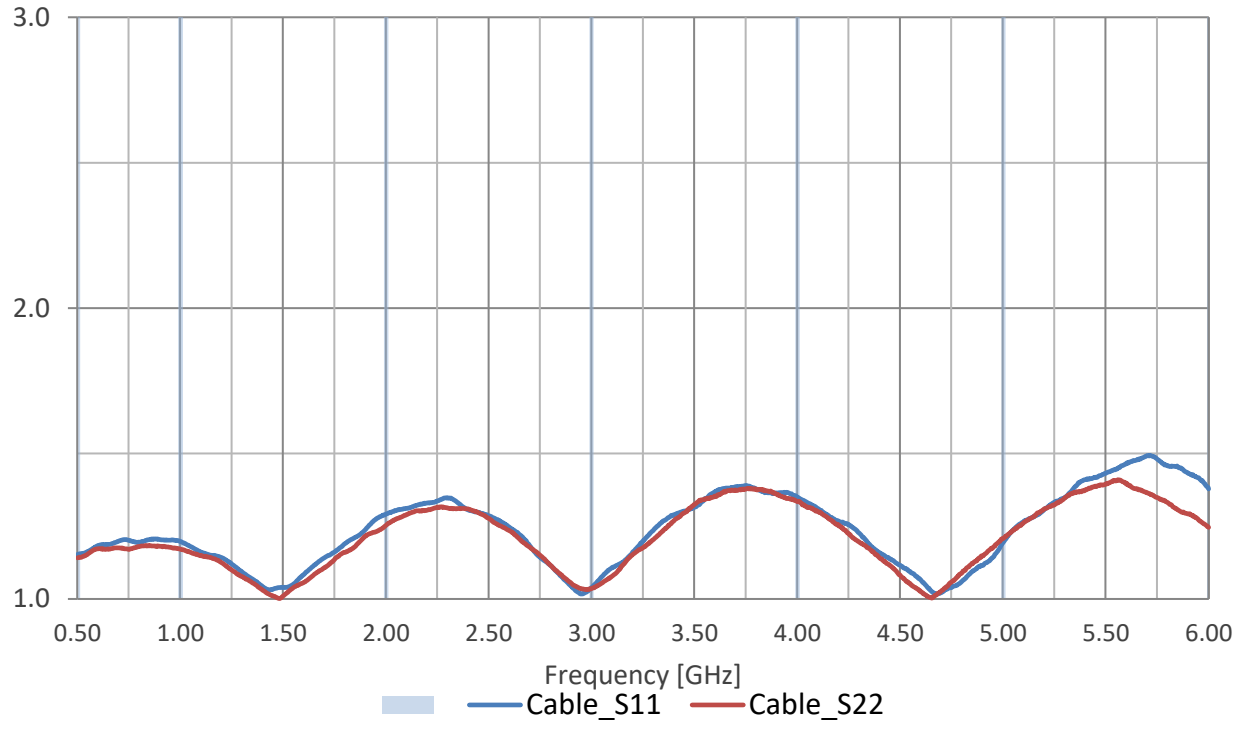

3.2 Insertion Loss

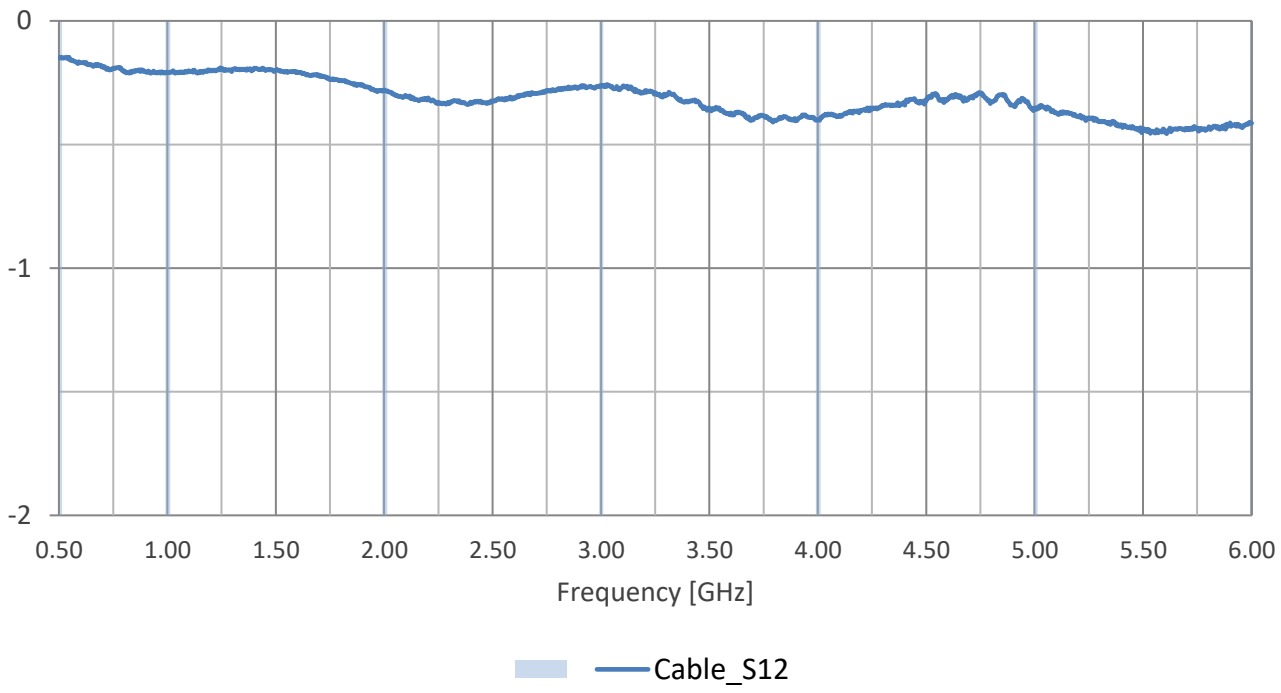

4. Mechanical Drawing (Units: mm)

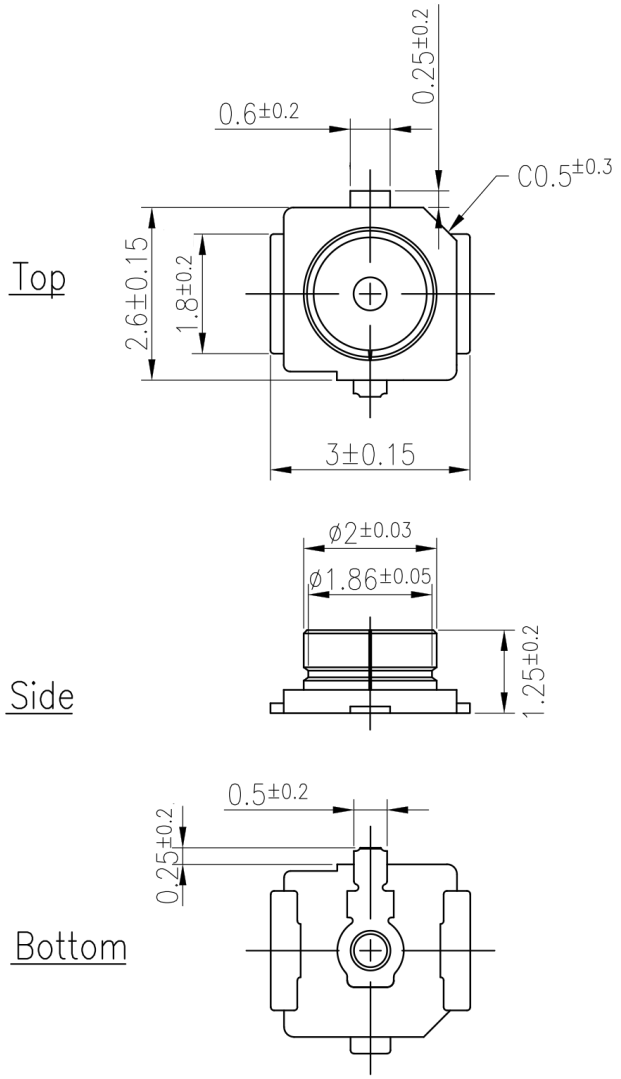

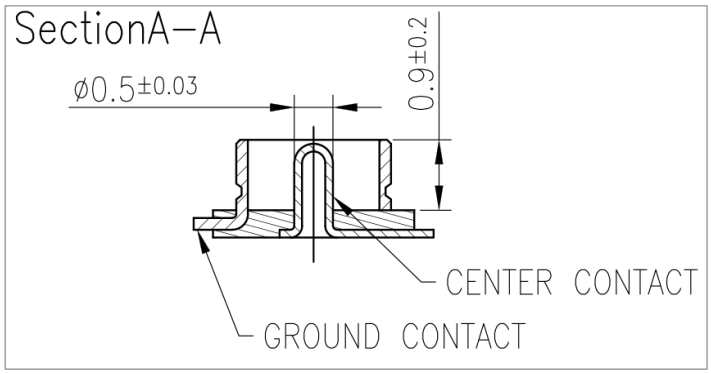

5. Footprint

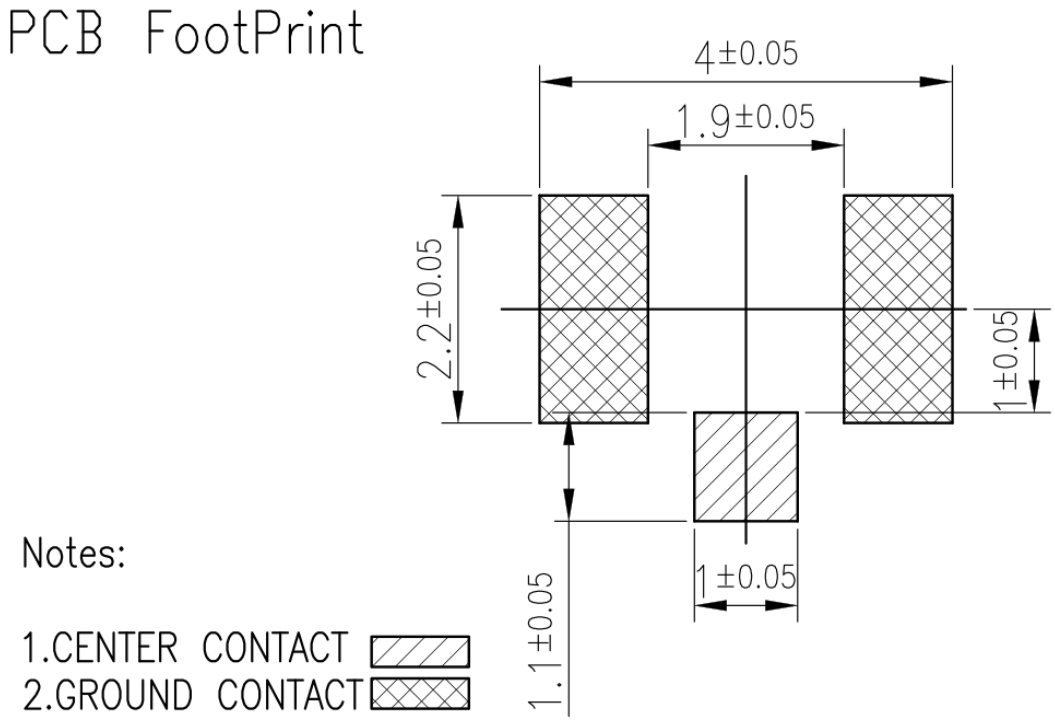
PCB FootPrint
4±0.05
1.9±0.05
2.2±0.05
1±0.05
1±0.05
1.1±0.05
Notes:
1.CENTER CONTACT
2.GROUND CONTACT

6. Solder Reflow

The RECE.20279.001E.01 can be assembled by following the recommended soldering temperatures are as follows:

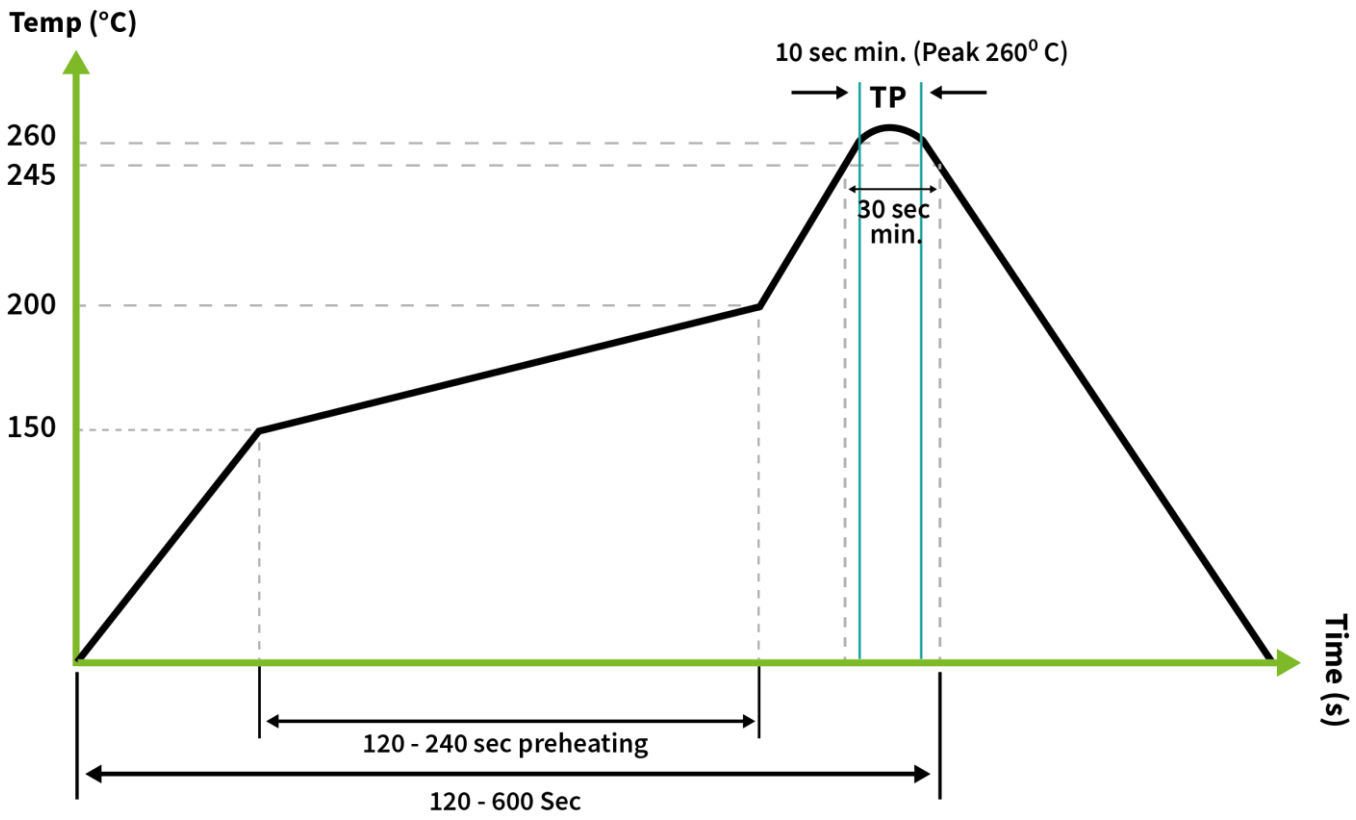

*Temperatures listed within a tolerance of +/- 10º C

Smaller components are typically mounted on the first pass, however, we do advise mounting the RECE.20279.001E.01 when placing larger components on the board during subsequent reflows.

Note: Soldering flux classified ROL0 under IPC J-STD-004 is recommended.

7. Packaging

5000 pcs RECE.20279.001E.01 reel
Dimensions - 330*330*20mm
Weight -300g

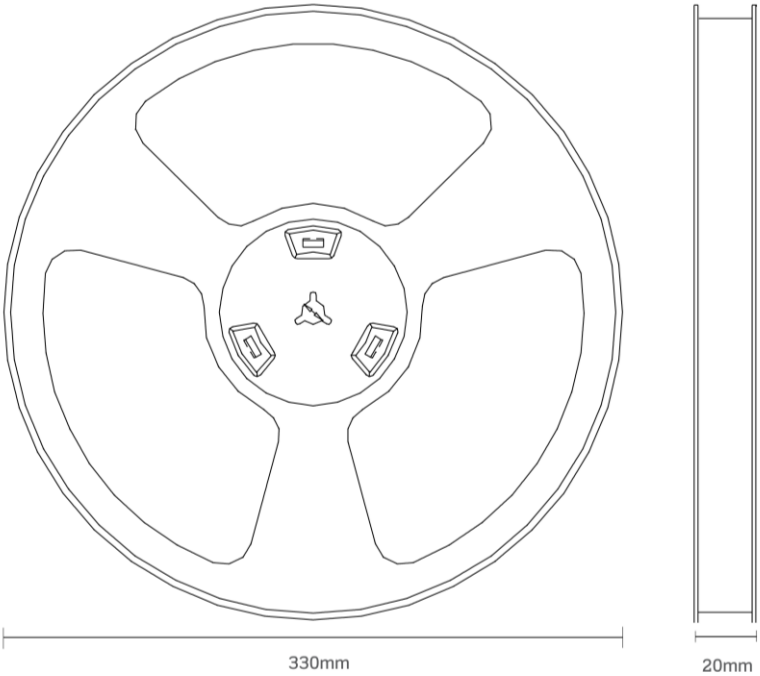

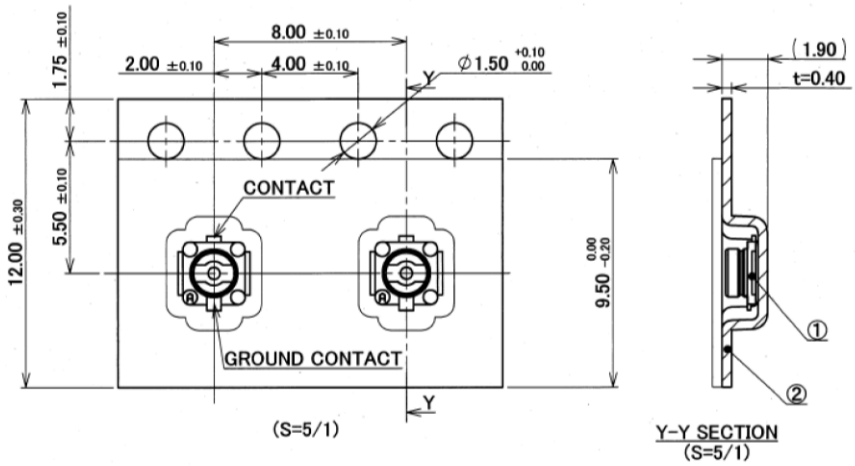

5000 pcs RECE.20279.001E.01 reel
Dimensions - 330*330*20mm
Weight - 300g

8 reels, 40000 pcs
in one carton
Carton Dimensions - 400*400*220mm
Weight - 3.2Kg

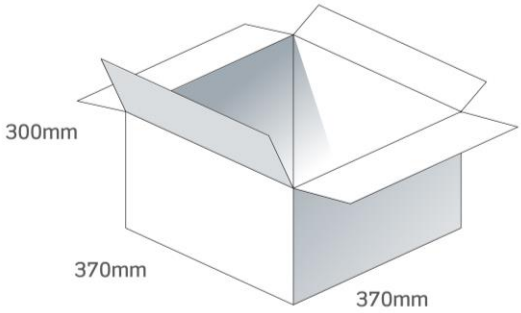

Pallet Dimensions 1200*800*1320mm
36 Cartons per Pallet
6 Cartons per layer
4 Layers

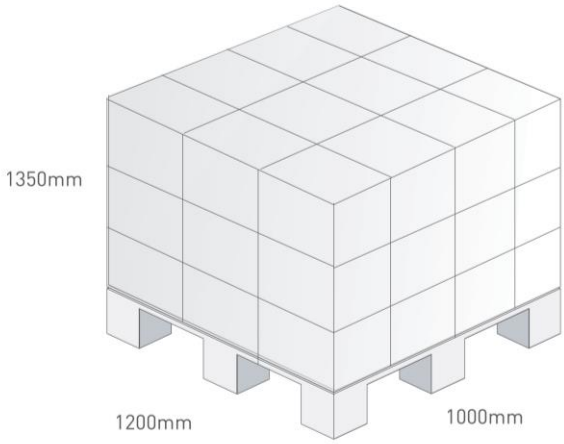

Changelog for the datasheet

SPE-16-8-032 - RECE.20279.001E.01

Revision: G (Current Version)	
Date:	2024-10-28
Changes:	Updated MSL from 3 to 2.
Changes Made by:	Paul Liu

Previous Revisions

Revision: F	
Date:	2023-07-19
Changes:	Updated Solder Reflow Information
Changes Made by:	Cesar Sousa

Revision: A (Original First Release)	
Date:	2016-04-21
Notes:	
Author:	Jack Conroy

Revision: E	
Date:	2023-03-03
Changes:	Updated descriptions
Changes Made by:	Cesar Sousa

Revision: D	
Date:	Date:
Changes:	Changes:
Changes Made by:	Changes Made by:

Revision: C	
Date:	2021-07-15
Changes:	Updated Solder Reflow Diagram & Adding MSL.
Changes Made by:	Gary West

Revision: B	
Date:	2021-02-03
Changes:	Following EC-20-8-036
Changes Made by:	Jack Conroy

TAOGLAS®

www.taoglas.com

© Taoglas