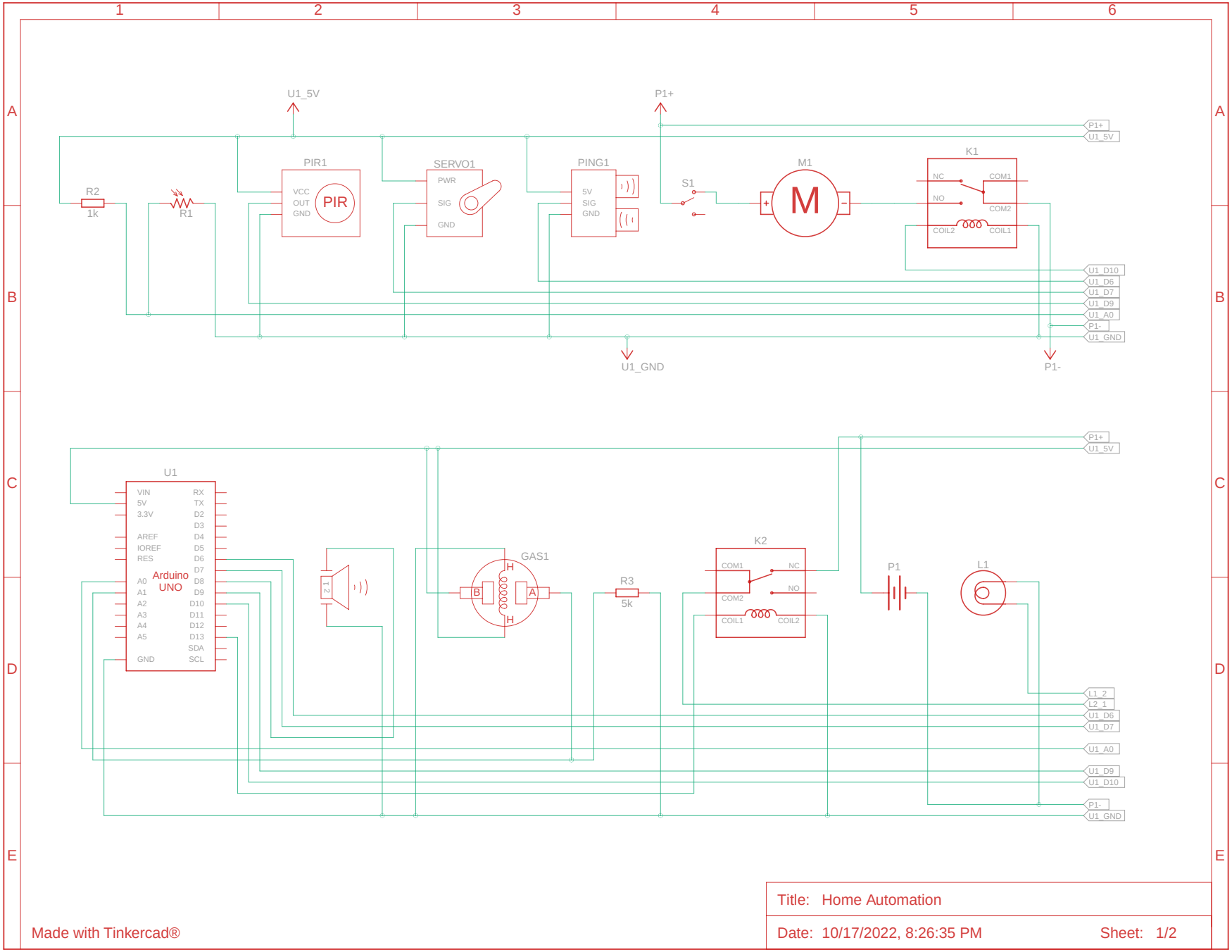

Made with Tinkercad®

Title: Home Automation

Date: 10/17/2022, 8:26:35 PM

Sheet: 1/2

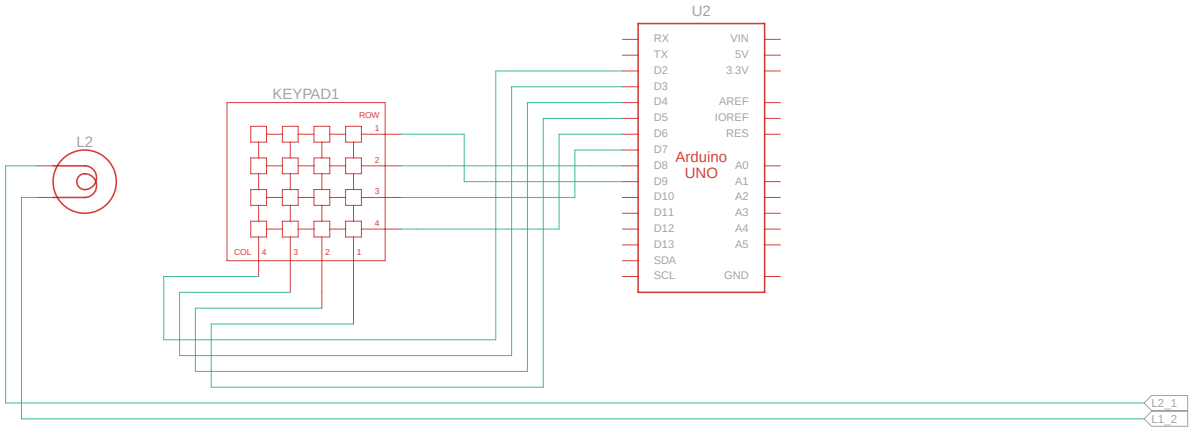

Made with Tinkercad®

Title: Home Automation

Date: 10/17/2022, 8:26:35 PM

Sheet: 2/2