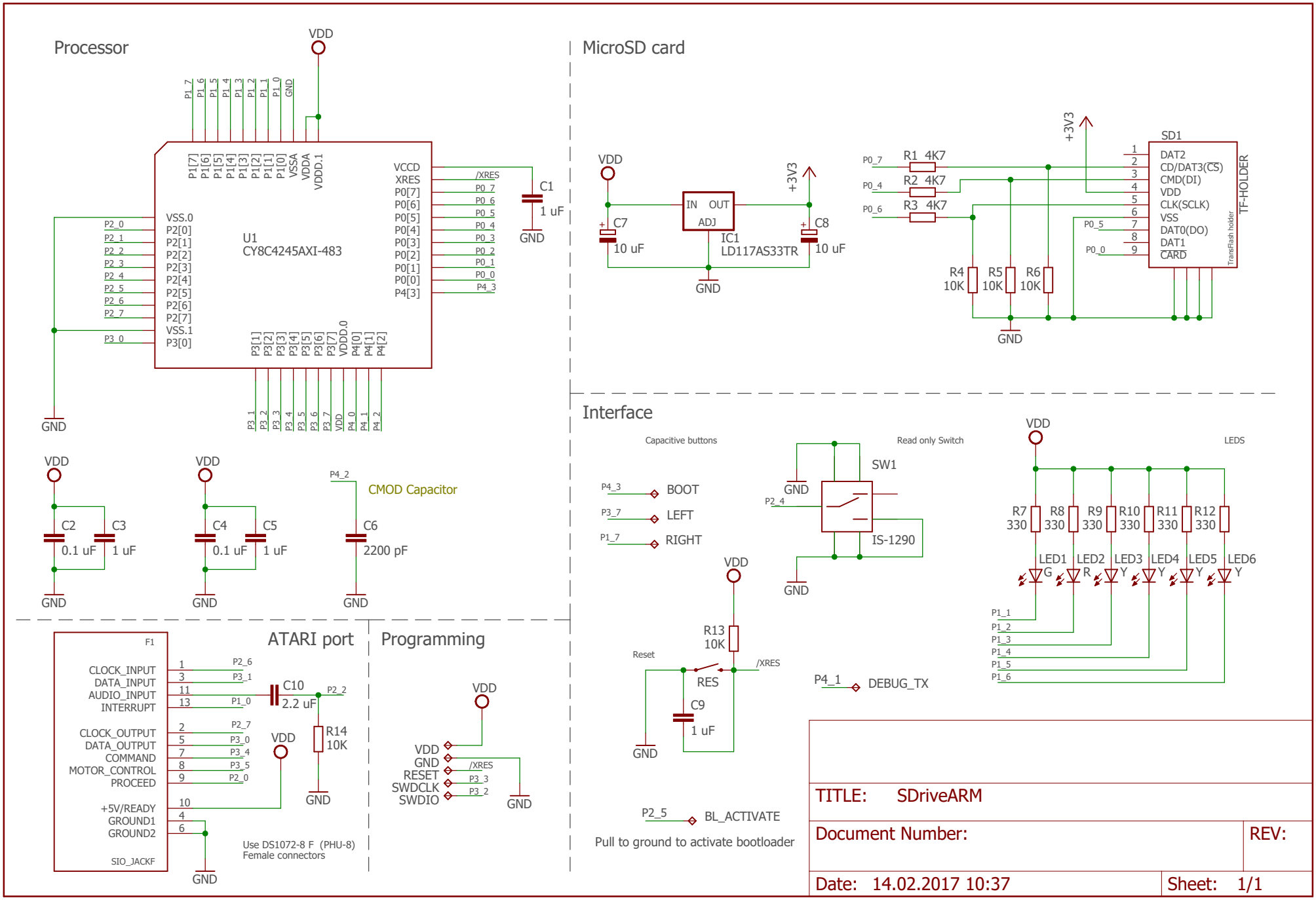
Processor
VDD
U1
CY8C4245AXI-483
VCCD
XRES
P0[7]
P0[6]
P0[5]
P0[4]
P0[3]
P0[2]
P0[1]
P0[0]
P4[3]
VSS.0
P2[0]
P2[1]
P2[2]
P2[3]
P2[4]
P2[5]
P2[6]
P2[7]
VSS.1
P3[0]
P1[7]
P1[6]
P1[5]
P1[4]
P1[3]
P1[2]
P1[1]
P1[0]
VSSA
VDDA
VDDD.1
P3[1]
P3[2]
P3[3]
P3[4]
P3[5]
P3[6]
P3[7]
VDDD.0
P4[0]
P4[1]
P4[2]
/XRES
C1
1 uF
GND
C2
0.1 uF
C3
1 uF
C4
0.1 uF
C5
1 uF
C6
2200 pF
CMOD Capacitor
MicroSD card
IN
OUT
ADJ
IC1
LD117AS33TR
C7
10 uF
C8
10 uF
+3V3
R1 4K7
R2 4K7
R3 4K7
R4
10K
R5
10K
R6
10K
SD1
DAT2
CD/DAT3(CS)
CMD(DI)
VDD
CLK(SCLK)
VSS
DAT0(DO)
DAT1
CARD
TF-HOLDER
TransFlash holder
Interface
Capacitive buttons
BOOT
LEFT
RIGHT
Read only Switch
SW1
IS-1290
LEDS
R7
330
R8
330
R9
330
R10
330
R11
330
R12
330
LED1
G
LED2
R
LED3
Y
LED4
Y
LED5
Y
LED6
Y
R13
10K
Reset
RES
C9
1 uF
DEBUG_TX
BL_ACTIVATE
Pull to ground to activate bootloader
ATARI port
F1
CLOCK_INPUT
DATA_INPUT
AUDIO_INPUT
INTERRUPT
CLOCK_OUTPUT
DATA_OUTPUT
COMMAND
MOTOR_CONTROL
PROCEED
+5V/READY
GROUND1
GROUND2
SIO_JACKF
C10
2.2 uF
R14
10K
Use DS1072-8 F (PHU-8)
Female connectors
Programming
RESET
SWDCLK
SWDIO
TITLE: SDriveARM
Document Number:
REV:
Date: 14.02.2017 10:37
Sheet: 1/1