2024 International Conference on Control, Automation and Diagnosis (ICCAD) | 979-8-3503-6102-5/24/$31.00 ©2024 IEEE | DOI: 10.1109/ICCAD60883.2024.10553999

Automated IoT-Based Performance Assessments Through Activity Recognition and Semantic Evaluation in Smart Learning Environments

Gina Martinez, Jason Perry, Vadim Biryukov
Department of Engineering, Computing and Mathematical Sciences
Lewis University, Romeoville, IL
{martingi, perryjn, vbiryukov}@lewisu.edu

***Abstract*—In this paper, we utilize internet-of-things and semantic technologies to automate the assessment of socio-technical behaviors in engineering students in a circuits laboratory setting. Socio-technical learning objectives in engineering courses, such as the ability to make ethically informed judgments and the proactive observance of safety procedures, are challenging to assess for many reasons, among them being that their assessment can be time consuming to administer and can be subjective. In this work, we propose a novel framework that includes perception and data aggregation layers that utilize both sensor and video monitoring approaches to perform activity recognition, an ontology schema for representing and relating the data, and a semantic query layer that reasons out the desired performance evaluation. Finally, our work presents conclusive data supporting the advantages of using IoT and semantic technologies in automating the assessment of socio-technical learning outcomes in engineering courses.**

Keywords—activity recognition, automated assessment, internet of things, semantic reasoning, knowledge-based, socio-technical student outcomes, smart learning environment.

I. Introduction

Engineering educational program accreditation bodies such as ABET emphasize the assessment and mastery of what we refer to as "socio-technical" skills in engineering students [1]. These skills encompass soft and social-impact skills, as well as behaviors and attitudes that demonstrate engineering competencies such as the ability to make ethically informed judgments, apply critical thinking in problem solving, and proactively observe safety procedures. Unfortunately, these characteristics are generally difficult to assess in a classroom [2] and the assessment results often suffer from subjectivity [1].

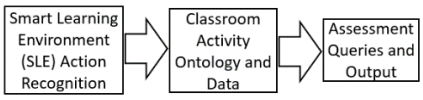

Figure 1: The Smart Learning Environment Ambient Assessment Framework

Our work aims to automate assessment of socio-technical behaviors in an academic laboratory setting by utilizing sensor, video processing and semantic technologies for activity recognition and reasoning through a framework which we refer to as the Smart Learning Environment (SLE) Ambient Assessment Framework (SLEAAF), as shown in Fig. 1. The SLEAAF consists of three major components: SLE activity recognition, classroom activity ontology, and assessment queries and outputs. As a whole, this system aims to automate assessment of socio-technical behaviors of students to provide real-time feedback.

This material is based upon work supported by the National Science Foundation under Grant No. 2138846.

II. Background and Related Work

A. IoT-based Assessment of Socio-Technical Learning

Assessment of students' attainment level of socio-technical learning outcomes are challenging and often involve methods such as role plays and reflection essays, although there is limited data available on how well these trainings predict on-the-job transfer [3]. While a significant body of work has been done on manual assessment of socio-technical skills, only a few have applied technology, particularly IoT, to automate the process. Existing automated approaches generally focus on examining purely technical competencies such as correctness of answers or sequence of actions [4], or they are specifically designed for single scenarios such as monitoring the students' level of interest [5]. The few existing applications of activity recognition in performance evaluation of students in educational settings do not employ semantic-based approaches, which limit the extendibility, adaptability and modularity of the system. A lack of flexibility in the assessment method could lead to prescriptive and restrictive assessment rules such as "a student must perform this action to meet this requirement". To the best of our knowledge, our work is the first to provide this desired flexibility through a semantic-based assessment framework that is specifically designed to support additional detection mechanisms and assessment scenarios.

B. Activity Detection Perception Layer

Techniques for activity recognition can range from sensor-based to video-based, or may employ data fusion through collaborative devices. The advantage of the former is high fidelity and accuracy since events are detected through some physical phenomena interfacing with the sensor, such as contact, pressure or sound [6]. However, these typically require expensive and time-consuming installation. On the other hand, video-based techniques can detect many types of events through single or multiple video streams, but often involve training video analysis software into recognizing composite actions or features of subjects within the video [7]. Our approach combines both techniques, often taking advantage of off-the-shelf components and open-source software to implement recognition of actions

XXX-X-XXXX-XXXX-X/XX/$XX.00 ©20XX IEEE

specifically in a laboratory activity setting. At the perception layer of activity recognition, our contributions are two-fold: 1) we provide a design for a laboratory bench setup for detecting several laboratory experiment actions, and 2) we provide an architecture for integrating sensor and video data to achieve actor-specific activity recognition.

C. Knowledge-based Activity Recognition in the SLE Domain

Knowledge-based approaches to activity recognition have previously been applied in other domains, such as the detection of activities of daily living (ADL) in smart homes and medical monitoring [8][9][10]. In the SLE domain however, the applications have been limited. The works in [11] and [12] are the smart classroom applications of ontologies that we have found to be most relevant to our work. Both are Internet of Things (IoT)-enabled approaches in which sensor data are stored in ontologies. In [12], ontologies are used to resolve classroom device interoperability, which is a domain-specific extension of knowledge-based approaches for resolving IoT device interoperability in general. In [11], semantic reasoning is used to automate certain events such as turning the lights on based on room occupancy. Neither of these works developed and used the ontologies towards assessment of student performance. Indeed, our previous work in [13] is the first of its kind to propose an ontology for performance assessment in the SLE domain, which we refine in this work. In the area of knowledge-based activity recognition in the SLE domain, our contributions include: 1) we provide a class activity ontology for representing and relating activities and properties in a circuits laboratory setting, and 2) we provide semantic queries that evaluate student performance from the data. More importantly, both serve as representative examples since our aim is to create an adaptable and extendable system.

III. Class Activity Ontology

To support data storage and knowledge-based assessment, we develop an ontology model for a smart learning environment domain, specifically that of a typical undergraduate circuits course laboratory experiment. As shown in the ontology in Fig. 2, such a session is an instance of the *ClassActivity* class. The ontology acts as a model of the relevant parts of the physical classroom space – it describes the objects within and their relationships. The time domain is integrated into the ontology by modeling dynamic classes as event-timestamp pairs. Activity recognition data are instances of the ontology classes and must conform to the schema for querying to be successfully carried out. The ontology defines two types of activities that occur within a *ClassActivity* – *InstantActivity* and *IntervalActivity*. All activities considered in this paper are of *InstantActivity* type, hence only such events are elaborated on here. Each activity has an associated actor via the *performedBy* property and an associated area of occurrence via the *occurredAt* property. An *InstantActivity* is also associated, via the *performedAt* property, with a single timestamp of when the activity occurred.

IV. Activity Recognition and Actor Association

We start by defining several terms that facilitate subsequent discussions. A *station* is a typical workbench setup in an undergraduate electric circuits course laboratory consisting of a computer, which we refer to as the *station computer*, various electric circuit instruments such as a power supply and multimeter, and areas designated for students to work on their circuit experiment, which we refer to as the *Circuit-Under-Test* (CUT). It is assumed that two students work as a group within the station. We use the terms *activity* or *event* to refer to an instance of *InstantActivity* subclasses as defined in the Class Activity ontology. We make a distinction between *activity* and *class activity*, with the latter referring to a session involving several activities, such as a lab experiment.

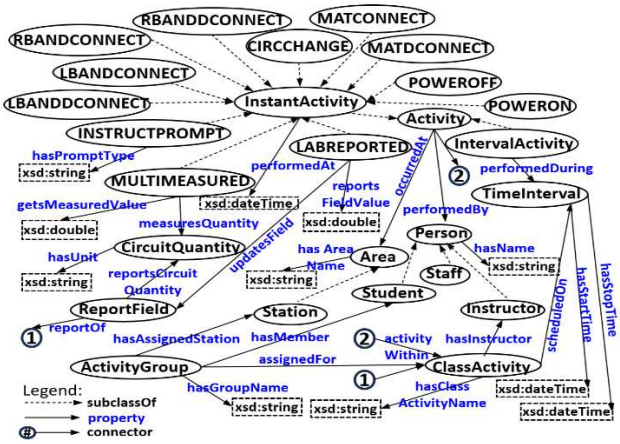

Figure 2: Class Activity Ontology

A. System Architecture

Fig. 3 shows the architecture of our proposed SLEAAF system. The RPI MONITOR runs on a microcontroller that interfaces with sensors detecting various events such as the connection/disconnection of antistatic mat, antistatic wrist bands, the turning on or off of a power supply, and the changes made to a circuit while the power is on. On the other hand, the STATION MONITOR runs on the station computer. It includes a graphical user interface (GUI) from which students can access the lab report form as well as various information and instructions about the class activity monitoring session. In addition to the GUI, the STATION MONITOR also launches the video capture background service used for facial recognition and localization of actors.

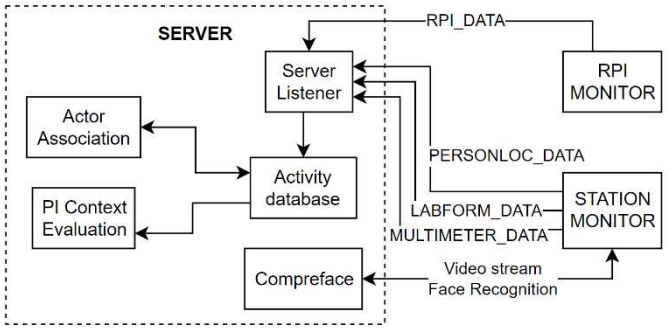

Figure 3: SLEAAF System Architecture

The facial recognition service, CompreFace, is used to determine the location of persons identified from the video frames. Timestamped events from both the RPI MONITOR and STATION MONITOR, as well as the location of identified persons, are forwarded to the Server Listener and placed into an

intermediate in-process database. The timestamps of person locations and events are correlated through the Actor Association component, which may additionally perform some lightweight preprocessing and aggregation of data. Finally, the PI Context Evaluation component examines the relative occurrences of events and their associated actors, and through semantic reasoning, identifies whether a student failed certain performance indicators.

B. Recognition of Laboratory Activity Events

1) Activity Recognition

Using a variety of approaches, we detect the occurrence of instances of supported *InstantActivity* subclasses, as identified in the Class Activity ontology.

a) Mat and band connections:

The *MATCONNECT*, *MATDCONNECT*, *LBANDCONNECT*, *LBANDDCONNECT*, *RBANDCONNECT* and *RBANDDCONNECT* events are recognized using the CM420 antistatic continuous monitor. As the labeling suggests, they respectively represent events such as when the antistatic mat is connected/disconnected, and when the left-side and right-side antistatic wrist bands are connected/disconnected.

The two-operator CM420 continuous monitor by Transforming Technologies comes with bicolor LED indicators to alert users whether the two wrist straps and one ESD mat are properly grounded. The bicolor LED takes in a step voltage input, producing one light color when the input voltage is of one polarity, and another when it is opposite. As we are interested in digitizing and logging the wrist band and mat connection states rather than a visual indication, the bicolor LED inputs are rerouted to BC549 NPN transistors, which rectify the signals to rail voltage inputs of Raspberry pi I/O pins. Fig. 4 shows the wiring diagram of the circuit.

b) POWERON and POWEROFF: These respectively represent the events of the power supply being turned ON or OFF. To recognize these events, a custom 3D-printed sleeve was placed on top of the power supply's rocker switch so that pressing the power supply ON/OFF button simultaneously triggered another button that directly inputs to the raspberry pi.

c) CIRCCHANGED: This represents the event in which the circuit is changed while the power is ON. As shown in Fig. 4, an INA 219 current monitor sensor is placed on the high side of the CUT. It measures current drawn at a resolution of 0.8 mA when the range is set to ±3.2 A, or a resolution of 0.1 mA for the range ±400 mA. Since the current drawn by the CUT is expected to be in the low milliamp range, the latter setting is used. About 1800 current monitor readings taken every two seconds while making various circuit changes (i.e. swapping different resistor values and opening/closing the circuit) were collected to train and test a random forest classifier model for predicting whether a circuit change occurred using the past N_P and "future" N_F values of a current reading as features (here, "future" means we simply wait for N_F additional readings to occur before making a prediction). To ensure that the appropriate values for N_P and N_F are used, the model is tested for values of N_P and N_F ranging from 0 to 20. Through this exhaustive search, the best prediction accuracy was obtained when N_P=1 and N_F=1, which indicates that a CIRCCHANGE event is best detected by examining a sudden change in current draw between two consecutive readings; looking ahead one future reading allows us to ignore single-reading spikes.

d) MULTIMEASURED: This represents the event in which an electrical quantity (current, voltage or resistance) is measured using an auto-logging multimeter, chosen to be the Keysight 34461A multimeter. This multimeter allows logging and programmatic control via the Keysight Benchvue desktop application (see "Benchvue" in Fig. 5). Autologging multimeters typically log data locally. Fortunately, Benchvue allows for the creation of custom "flows" which are graphical, block-based programs that include the capability of running a custom script. Our Benchvue custom flow obtains multimeter readings and their timestamps and launches an external script that sends timestamped resistance, current and voltage measurements to the server in real time.

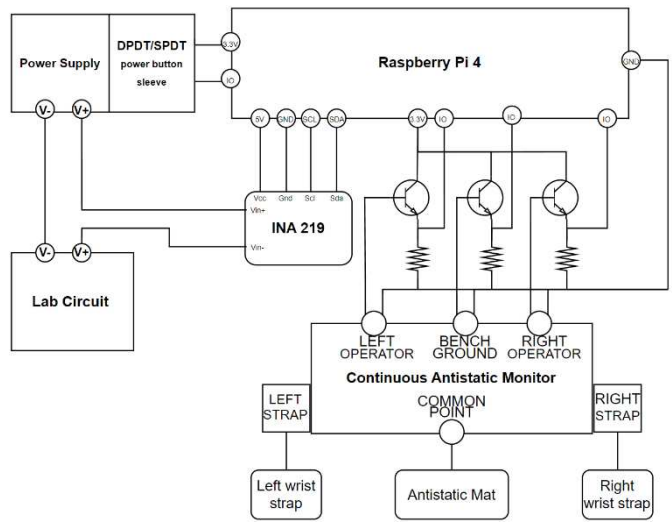

Figure 4: Raspberry Pi Wiring Diagram

e) LABREPORTED: This represents the event in which an electrical quantity (current, voltage or resistance) is reported in an electronic lab report form (see "Labform" in Fig. 5). The digital form includes edit fields where answers to a report question can be typed in. The reporting timestamp, inputted value, report field identifier and the quantity type (current, voltage or resistance) is submitted to the server every time an input to a field is saved.

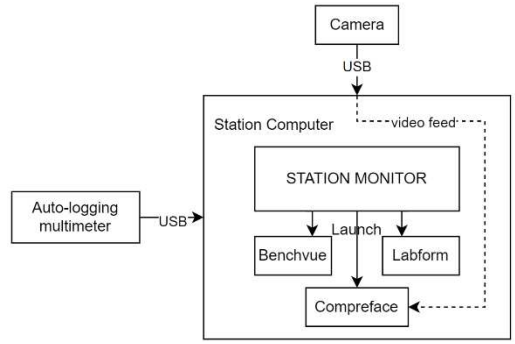

Figure 5: Station Computer Applications and Connected Devices

2) Actor Association

Detected activities are associated with actors through temporal and spatial alignment of events and persons. First, localization of persons in the vicinity of a station is performed using a front-facing camera and the open-source facial recognition software CompreFace. CompreFace uses machine learning to match faces in a video frame with profile pictures in its face collection with a claimed 99.83% accuracy on the Labeled Faces in the Wild (LFW) dataset. CompreFace outputs the person identifier associated with a matched profile picture as well as the video frame location of a rectangular box of associated upper left coordinate, B_{min}, and lower right, B_{max}, circumscribing each detected face.

The actor closest to an *associated item* at a fixed and known location is concluded to be the actor of an activity. For power-related activities, the associated item is the power supply. For LABREPORTED, this is the station computer. The antistatic band connectors are positioned on extreme sides of the station table. The remaining detected activities are associated with the CUT. Some associated items such as the power supply, station computer, and antistatic band connectors are decidedly located on either the left or right side of the station. In these cases, the association is determined through the relative positions of actors on the frame. For associated items that are placed in the center, such as the CUT and mat connector, the person determined to be closest to the center of the frame is associated as the actor.

To associate an actor with a given event, the system scans the set of B_{min} and B_{max} records that have been computed and stored by the vision system, going backwards in time, from the timestamp of the event to a preset time threshold before the event (the evaluation in this paper was conducted with a threshold of 15 seconds.) The person located closest to the relevant associated item for the event is selected as the event actor, and an updated event record is emitted with the actor's identification field filled in. In case the system fails to find a person within the given range, the actor is marked as "Unknown".

V. Semantic Evaluation of Activities

A significant advantage of performing activity recognition at a higher logical layer through reasoning with activities and their associated properties, is that we can compound these activities into scenarios of interest as desired. To illustrate the potential of our work, we elect to evaluate the scenarios corresponding to several "performance indicators" described in this section.

A. Data Storage and Query Framework

Apache Jena, a Java framework that is widely used in semantic web applications, is used in the implementation and data storage. The Class Activity Ontology and Resource Description Graph (RDF) triples of activity instances are serialized using Turtle syntax and exposed for querying using Fuseki, Jena's SPARQL server. The assessment queries are implemented in the SPARQL Protocol and RDF Query Language (recursively SPARQL).

[1]The ClassActivity OWL, data TTL and query RQ files are available at github.com/SLEResearch/ClassActivityOntology

B. Performance Indicator Scenario Queries

PI1: *Does not make up data (ethics).*

Performance Indicator 1 (**PI1**) examines the LABREPORTED activities performed by a student, and checks whether a prior measurement (MULTIMEASURED) activity was performed by any student in the group. **PI1** is failed by a student if a MULTIMEASURED activity for the same data type (i.e. resistance, voltage or current) within an acceptable time window, obtaining a result that is within a predefined value error tolerance, cannot be found. The SPARQL queries can be found in our previous work [13] and online repository[1].

PI2: *Turns off power supply before making circuit changes (safety).*

Performance Indicator 2 (**PI2**) examines the CIRCCHANGE activities performed by a student. The ideal condition is that **PI2** is met if a CIRCCHANGE event is preceded by a POWEROFF event. However, our approach identifies CIRCCHANGE events by monitoring the current supplied to the circuit experiment, therefore, they cannot be detected when the power supply is off. Hence, any CIRCCHANGE activity recorded that is not due to POWERON or POWEROFF event is necessarily a case of failed **PI2**.

PI3: *Proactively wears the antistatic wrist band (safety).*

Performance Indicator 3 (**PI3**) examines the LBANDCONNECT and RBANDCONNECT activities relative to a POWERON event. Our system is able to detect the band-related activities regardless of the power supply state since their respective detection systems are powered separately. We evaluate **PI3** by determining whether a POWERON event occurs before the wrist band is worn by a particular student, in which case, **PI3** is recorded to have been failed by that student.

PI4: *Proactively uses the antistatic mat (safety).*

Performance Indicator 4 (**PI4**) examines the MATCONNECT activities relative to a POWERON event. If a POWERON event occurs before the antistatic mat is connected, **PI4** is recorded to have been failed by both students in the group.

PI5: *Proactively turns off the power supply at the end of the activity (ethics, safety).*

Performance Indicator 5 (**PI5**) examines the power-related events (POWERON and POWEROFF) recorded for a particular lab experiment session. Each monitored lab experiment session is associated by an identifier. If the last power-related activity for a session identifier is a POWERON activity, then **PI5** is failed by both students in the group.

PI6: *Contributes to group work (ethics, teamwork).*

Performance Indicator 6 (**PI6**) examines the number of "contributing" activities performed by each student in the group. "Contributing" activities include POWERON, POWEROFF, CIRCCHANGE, MULTIMEASURED and LABREPORTED events.

While in this work, we elect to investigate the performance indicators presented, it can be seen that other scenarios can be composed easily, even using the same dataset. For example, we could evaluate whether students took too long to get started with the experiment, which may indicate unfamiliarity with the equipment and materials.

VI. Experimental Procedure and Results

Our experimental setup involves two actors in a single lab station performing five introductory circuit analysis lab experiments that involve connecting and measuring electrical quantities of a circuit with two parallel resistors (the circuit-under-test, CUT). Throughout an experiment, and with necessary safety precautions, the actors perform CIRCCHANGE events when one of the resistors is swapped out with another, or circuit elements are disconnected/connected to insert multimeter probes for measuring current. For every activity taken, the actors also record via an "Actual Events Recorder" application specifically developed to automatically log timestamps and event actors for testing. This provides the ground truth with which activity recognition performance is evaluated against. The lab experiments are designed so that each performance indicator is failed in at least one experiment.

A. Hit rate and true positive rate of recognized activities

First, we analyze the performance of each activity recognition technique using two performance metrics. The *hit rate* indicates the percentage of actual events that were recognized successfully and the *true positive* rate indicates the percentage of logged events that correspond to actual events. The former measures the system's ability to actually detect our target events, while the latter measures the false positives. Table 1 shows these metrics and the accuracy determined from our tests.

Table 1: Activity Detection and Actor Association Accuracy

Event	Hit rate	True positive
POWERON	100%	100%
POWEROFF	100%	100%
MATCONNECT	100%	100%
MATDCONNECT	100%	100%
LBANDCONNECT	100%	100%
LBANDDCONNECT	100%	100%
RBANDCONNECT	100%	100%
RBANDDCONNECT	100%	100%
CIRCCHANGE	96%	79%
MULTIMEASURED	100%	96%
LABREPORTED	100%	100%

The current monitor false positives are largely due to sudden spikes that might result from accidental contacts. Similarly, the hit rate may suffer due to changes corresponding to current deltas too small for the INA 219 or classifier model to detect.

B. Activity-actor association accuracy

We evaluate the accuracy of our activity-actor association approach using the data collected from the five lab experiments carried out. Our actor association method achieved 88% accuracy in associating a detected event with the correct actor. The false associations were mainly due to events with associated items at the center of the station, and the fact that in some cases, an actor may simply reach out to the middle of the station to perform an action, but their detected face does not move too much towards the center of the video frame.

C. Performance Indicator Evaluation

We test the effectiveness of our proposed SLEAAF automated assessment system by evaluating how well it detects failed performance indicators (e.g. **PI1** is failed if a student made up data). The lab experiments are scripted such that it is initially known which, and how many times, each performance indicator is failed by a student or group. To evaluate our system independent of the accuracy of the actor association subsystem, the correct actor associations were used in this analysis. Table 2 compares the number of actually failed PIs and the number detected by the SLEAAF system. The PI# column indicates the performance indicator identifier as defined in section V.B.

Table 2: Performance Indicator Detection Performance

PI#	Actual/Detected PI Violations				
	Exp1	Exp2	Exp3	Exp4	Exp5
(1)	4/5	2/3	3/3	0/0	3/3
(2)	8/9	4/4	0/2	4/6	6/11
(3)	PF/PF	FF/FF	FF/FF	PP/PP	PP/PP
(4)	F/F	F/F	F/F	P/P	P/P
(5)	P/P	F/F	F/F	P/P	P/P
(6)	63%/60%	69%/69%	50%/50%	93%/93%	56%/53%

In the rows for PI1, PI2 and PI3, each cell indicates the number of times a PI is actually failed versus the number determined by SLEAAF. For example, PI1 in experiment 1 specifies 4/5 to indicate that there are 4 actual incidents in the experiment where the group failed PI1. However, 5 are detected because in one case, the student reported a wrong value (i.e. inputted the value in milliamps instead of amperes). Similarly, for PI2, a false positive CIRCCHANGE event can result in falsely detecting a PI2 violation. For the PI3 row, "PF" indicates one student in the group passed (i.e. wore the wrist band before the power supply was turned on), while the other student failed. Since PI4 and PI5 are necessarily a group activity, 'P' or 'F' respectively indicates whether the group passed or failed the PI. It can be seen that SLEAAF accurately detected all the violations for these cases. Lastly, the PI6 row indicates the percentage of activities done by one student. Here, we can see that for experiment 4, the second student contributed very little to the work.

Considering that an instructor is likely not able to observe a specific group of students for the entire duration of the class activity, the automated detection capability offered by the SLEAAF system significantly augments the assessment capabilities of an instructor. In a class with 10 student groups, an instructor would, on average, be able to observe a specific group only 10% of the time, and even then, there is no guarantee that 100% of the failed PIs will be observed by the instructor visually. This further highlights the utility and effectiveness of our approach.

VII. Conclusion and Future Work

In this work, we demonstrated a novel automated assessment approach for evaluating student attainment of socio-technical

learning outcomes that unambiguously specify the behaviors and scenarios being assessed, which output quantitative results, thereby addressing the subjectivity of existing methods. We presented an architecture for implementing such a system starting with the perception layer that performs activity recognition, a data aggregation layer fusing sensor and video monitoring for facial recognition, activity-actor association, and finally, a semantic layer consisting of an ontology schema relating data points and a query layer for semantic reasoning with the ontology and data.

The modular nature of the various contributions of our work can be applied and/or extended independently or as a cohesive framework. The Class Activity Ontology provides a structure for modeling activities and properties of a learning environment domain, which previously has not been available. Our work also presented several activity detection techniques that utilize off-the-shelf components, such as the use of a current monitor to detect circuit changes, the digitization of antistatic continuous monitor states, and the use of auto-logging multimeter to monitor circuit quantity measurements. Additional activity detection mechanisms can be independently implemented and easily incorporated into the ontology. Finally, our work provided several assessment queries that serve as examples of how additional queries can be formed.

For future work, we aim refine the accuracy of the CIRCCHANGE true positive detection and the actor association subsystems. One potential approach is to augment the detection of CIRCCHANGE events by detecting hand movement over the CUT using an overhead camera. This can also aid in increasing the accuracy of the actor association subsystem since the hand orientation above the CUT can help determine which actor performed the activity. We also aim to expand our monitoring setup into multiple stations so that the system can be deployed in actual circuits laboratory courses.

Our plans for future work further emphasize the extendibility, modularity, and flexibility of our approach. Existing activity detection mechanisms will be refined and can be done so independent of the rest of the system. New activity detection capabilities are planned, such as the use of speech and voice recognition to determine speaking intervals of nearby individuals. With the addition of new activity detection capabilities, new performance indicator queries can be formed. For example, it is possible to evaluate whether a student is constantly interrupting their teammate by examining the start and stop timestamps of speaking intervals.

In conclusion, our work presented concrete techniques and examples in semantic activity recognition, as well as laying the groundwork for what we envision to be a crowd-sourced approach for developing quantitative techniques for evaluating student attainment of socio-technical skills in smart learning environments.

REFERENCES

[1] L. J. Shuman, M. Besterfield-Sacre, J. McGourty, The ABET "Professional Skills" – Can They Be Taught? Can They Be Assessed?" Journal of Engineering Education - 1- Vol. 94, No. 1, 2005

[2] W. H. Abulfaraj, M. H. Hassan, "Teaching and assessment of professional ethics in the nuclear engineering education according to the ABET Engineering Criteria," 2007 American Society of Engineering Education Annual Conference & Exposition June 24-27, 2007 -Honolulu, USA.

[3] L. Steele, T. Mulhearn, K. Medeiros, L. Watts, S. Connelly, M. Mumford, "How Do We Know What Works? A Review and Critique of Current Practices in Ethics Training Evaluation," Account Res. 2016;23(6):319-50. doi: 10.1080/08989621.2016.1186547. PMID: 27159494.

[4] K. Mershad, A. Damaj and A. Hamieh, "Using Internet of Things for Automatic Student Assessment during Laboratory Experiments," 2019 IEEE International Smart Cities Conference (ISC2), Casablanca, Morocco, 2019, pp. 317-323, doi: 10.1109/ISC246665.2019.9071654.

[5] N. Gligoric, A. Uzelac, S. Krco, I. Kovacevic and A. Nikodijevic, "Smart classroom system for detecting level of interest a lecture creates in a classroom", Journal of Ambient Intelligence and Smart Environments, vol. 7(2), pp.271-284, 2015

[6] A. Das Antar, M. Ahmed and M. A. R. Ahad, "Challenges in Sensor-based Human Activity Recognition and a Comparative Analysis of Benchmark Datasets: A Review," 2019 Joint 8th International Conference on Informatics, Electronics & Vision (ICIEV) and 2019 3rd International Conference on Imaging, Vision & Pattern Recognition (icIVPR), Spokane, WA, USA, 2019, pp. 134-139, doi: 10.1109/ICIEV.2019.8858508.

[7] R. Khurana and A. K. S. Kushwaha, "Deep Learning Approaches for Human Activity Recognition in Video Surveillance - A Survey," 2018 First International Conference on Secure Cyber Computing and Communication (ICSCCC), Jalandhar, India, 2018, pp. 542-544, doi: 10.1109/ICSCCC.2018.8703295.

[8] P. R. Woznowski, E. L. Tonkin, P. A Flach, "Activities of Daily Living Ontology for Ubiquitous Systems: Development and Evaluation", Sensors (Basel), vol. 18(7), 2018, doi:10.3390/s18072361

[9] L. Chen, C. D. Nugent and H. Wang, "A Knowledge-Driven Approach to Activity Recognition in Smart Homes," in IEEE Transactions on Knowledge and Data Engineering, vol. 24, no. 6, pp. 961-974, June 2012, doi: 10.1109/TKDE.2011.51.

[10] D. Mitchell, P. J. Morrow and C. D. Nugent, "A sensor and video based ontology for activity recognition in smart environments," 2014 36th Annual International Conference of the IEEE Engineering in Medicine and Biology Society, 2014, pp. 5932-5935, doi: 10.1109/EMBC.2014.6944979.

[11] K. Maria, E. Vasilis and A. Grigoris, "S-CRETA: smart classroom real-time assistance", In Ambient Intelligence-Software and Applications , pp. 67-74, Springer, Berlin, Heidelberg, 2012.

[12] S. D. Nagowah, H. ben Sta and B. A. Gobin-Rahimbux, "An Ontology for an IoT-enabled Smart Classroom in a University Campus," 2019 International Conference on Computational Intelligence and Knowledge Economy (ICCIKE), 2019.

[13] G. Martinez, O. Abuomar, J. Perry and K. Kane, "A Classroom Activity Ontology and Knowledge-Based Assessment Approach," 2022 IEEE Frontiers in Education Conference (FIE), 2022, pp. 1-9, doi: 10.1109/FIE56618.2022.9962458.