SAMSUNG CONFIDENTIAL
THIS DOCUMENT CONTAINS CONFIDENTIAL
PROPRIETARY INFORMATION THAT IS
SAMSUNG ELECTRONICS CO'S PROPERTY.
DO NOT DISCLOSE TO OR DUPLICATE FOR OTHERS
EXCEPT AS AUTHORIZED BY SAMSUNG.

SM-S918U_S_AP_REV0.7

SHEET01 : RF (1/2)
SHEET02 : RF (2/2), RF PMIC #1
SHEET03 : BT/WIFI, UWB
SHEET04 : NFC IC, MFC IC, SENSOR, MOTOR DRIVER IC, AUX S
SHEET05 : AP(1/2), UFS, NVM
SHEET06 : AP(2/2), Charger block
SHEET07 : AP PMIC set, Clock Generator
SHEET08 : SPK AMP, MIC
SHEET09 : CAM PMIC, CAM Conn., CAM MCU, DISPLAY PMIC, D
SHEET10 : 5G IFIC, mmW connector, RF PMIC #2

zhizhen schematic

Engineer:
Drawn by:
R&D CHK:
DOC CTRL CHK:
MFG ENGR CHK:
QA CHK:
TITLE:
Size:
REV
Drawing Number:
Page:
Changed by: 92nd
Date Changed:
Time Changed:

SAMSUNG CONFIDENTIAL
THIS DOCUMENT CONTAINS CONFIDENTIAL
AND PROPRIETARY INFORMATION OF
SAMSUNG ELECTRONICS CO. LTD. PROPERTY.
DO NOT DISCLOSE TO OR DUPLICATE FOR OTHERS
EXCEPT AS AUTHORIZED BY SAMSUNG.

zhizhen schematic

Engineer:	SEC
Drawn by:	SEC
R&D CHK:	
DOC CTRL CHK:	
MFG ENGR CHK:	
TITLE:	RF (1/2)
SIZE:	
Drawing Number:	
Scale:	

Changed by: PHIN | Date Changed: | Time Changed: | QA CHK:

SAMSUNG CONFIDENTIAL
THIS DOCUMENT CONTAINS CONFIDENTIAL
AND PROPRIETARY INFORMATION OF
SAMSUNG ELECTRONICS CO'S PROPERTY.
DO NOT DISCLOSE TO OR DUPLICATE FOR OTHERS
EXCEPT AS AUTHORIZED BY SAMSUNG.

zhizhen schematic

Engineer:		SAMSUNG ELECTRONICS	
Design by:			
Schem by:			
SQE:			
PCB CHK:	TITLE:		Size:
DOC CTRL CHK:		BT/WiFi, UWB	24 x 36 A
MFG ENGR CHK:			
Q/A CHK:	REV:	Drawing Number:	Page: 2

Changed by: Ju Chin	Date Changed: Wednesday, April 7, 2021	Time Changed: 10:16:36 am

SAMSUNG CONFIDENTIAL
THIS DOCUMENT CONTAINS CONFIDENTIAL
AND PROPRIETARY INFORMATION OF
SAMSUNG ELECTRONICS CO'S PROPERTY.
DO NOT DISCLOSE TO OR DUPLICATE FOR OTHERS
EXCEPT AS AUTHORIZED BY SAMSUNG.

AUDIO

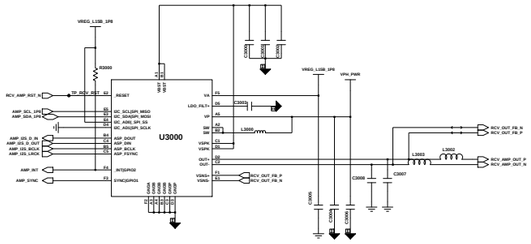

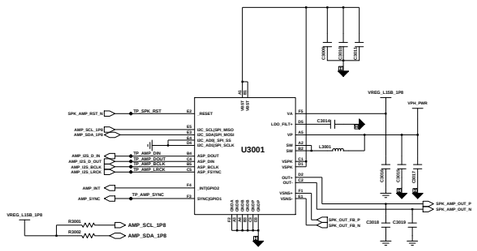

Visual

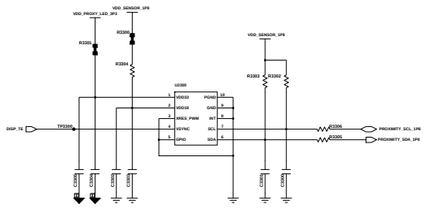

System

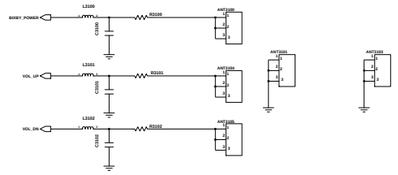

Vol + Power key

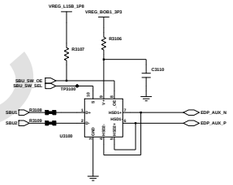

AUX sw

Power

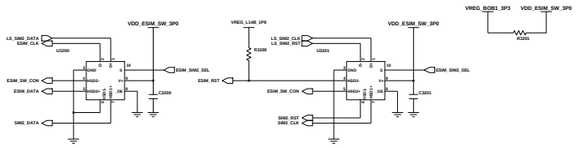

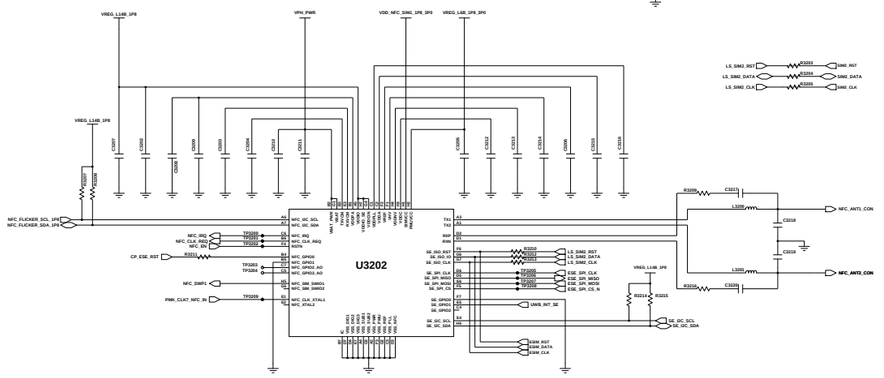

zhizhen schematic

Engineer:	SAMSUNG ELECTRONICS
Schematic by:	
Screen by:	
BDC:	
R&D CHK:	TITLE:
DOC CTRL CHK:	
MFG ENGR CHK:	NFC, MFC, MOTOR, SENSOR
QA CHK:	REV: Drawing Number: PAP:

Changed by: kwon.kang | Date Changed: Wednesday, April 28, 2021 | Time Changed: 3:08:18 pm

SAMSUNG CONFIDENTIAL
THIS DOCUMENT CONTAINS CONFIDENTIAL
PROPRIETARY INFORMATION THAT IS
SAMSUNG ELECTRONICS CO'S PROPERTY.
DO NOT DISCLOSE TO OR DUPLICATE FOR OTHERS
EXCEPT AS AUTHORIZED BY SAMSUNG.

System

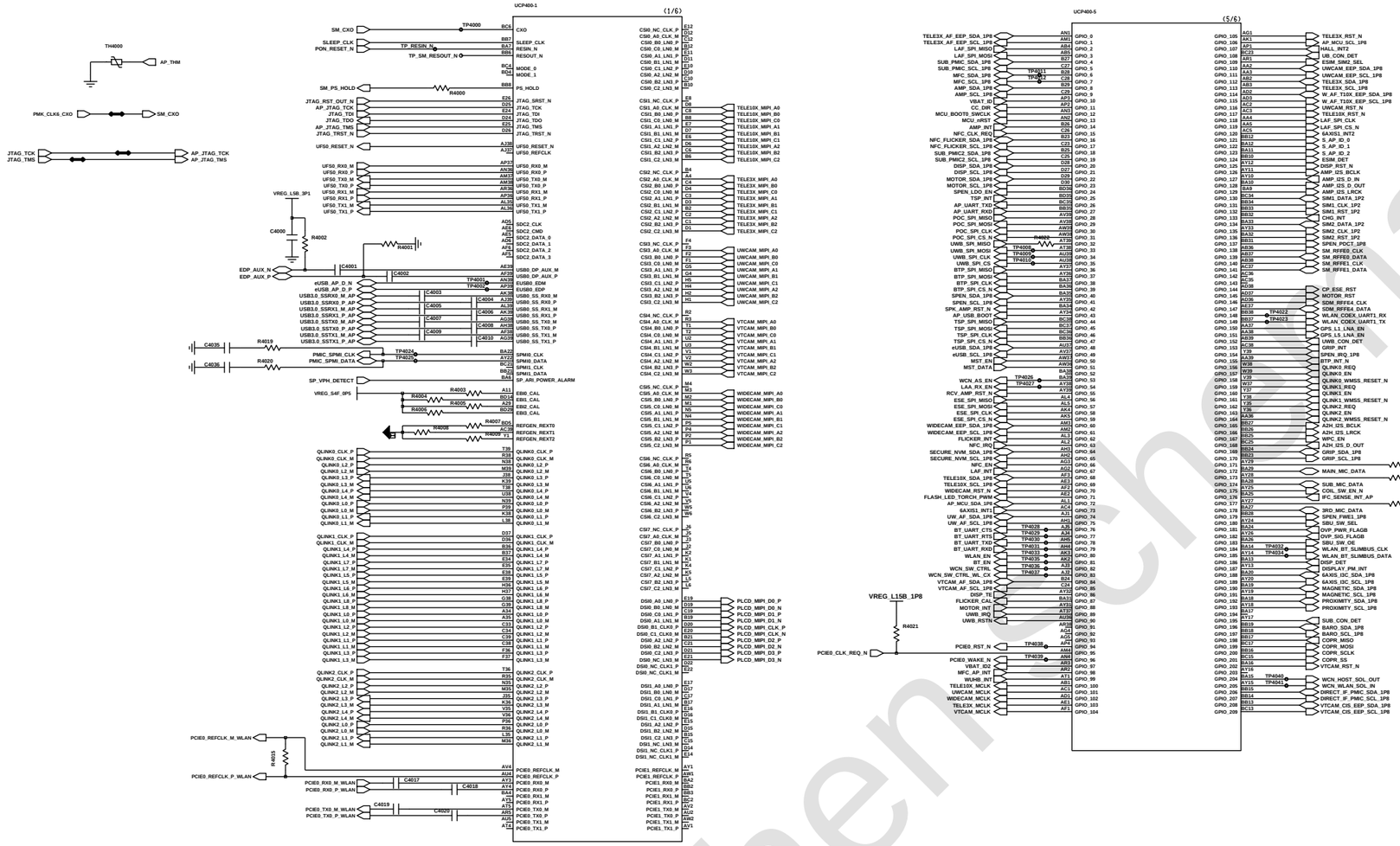

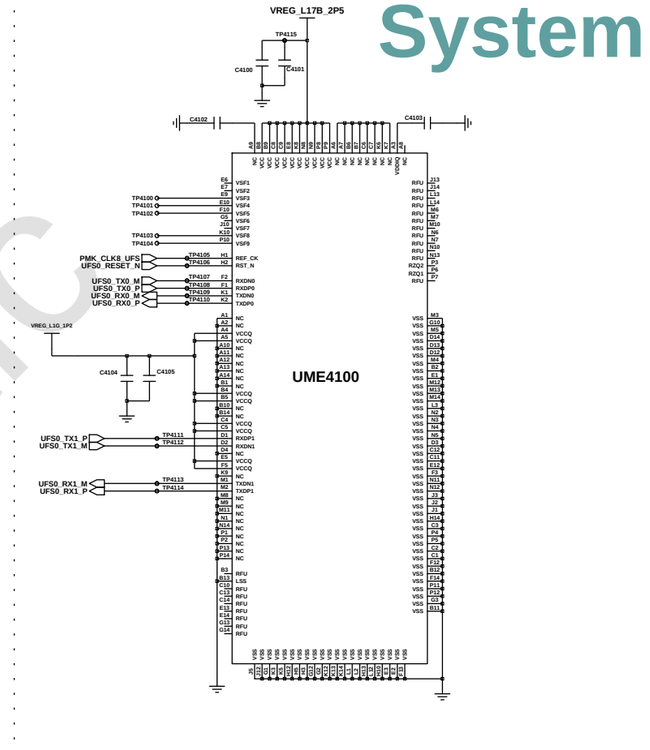

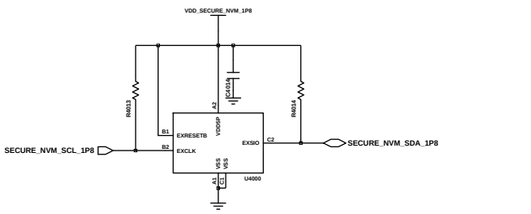

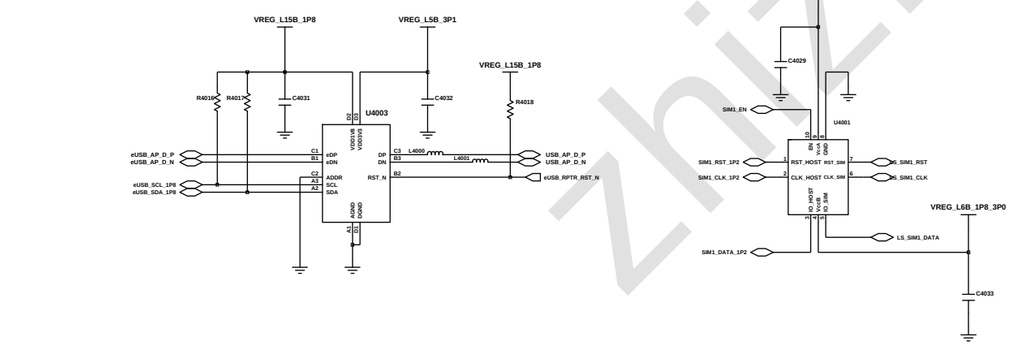

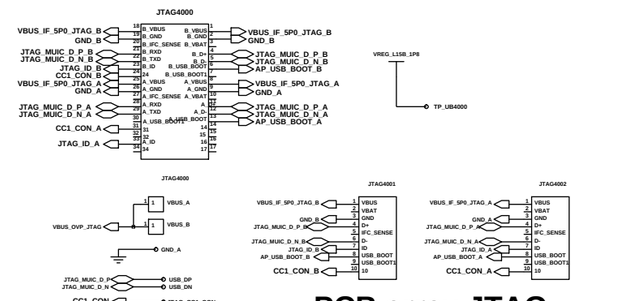

FOR JIG

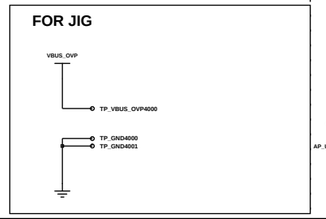

PCB array JTAG

Engineer: SEC	SAMSUNG ELECTRONICS		
Drawn by: SEC			
R&D CHK:	TITLE: AP (1/2), UFS, NVM		Size: 16 1 12 A
DOC CTRL CHK:			
MFG ENGR CHK:			
QA CHK:	REV:	Drawing Number:	Page: 1

Changed by: hanul.kim | Date Changed: Monday, April 19, 2021 | Time Changed: 2:01:32 am

zhizhen

SAMSUNG CONFIDENTIAL
THIS DOCUMENT CONTAINS CONFIDENTIAL
AND PROPRIETARY INFORMATION OF
SAMSUNG ELECTRONICS CO'S PROPERTY.
DO NOT DISCLOSE TO OR DUPLICATE FOR OTHERS
EXCEPT AS AUTHORIZED BY SAMSUNG.

Power

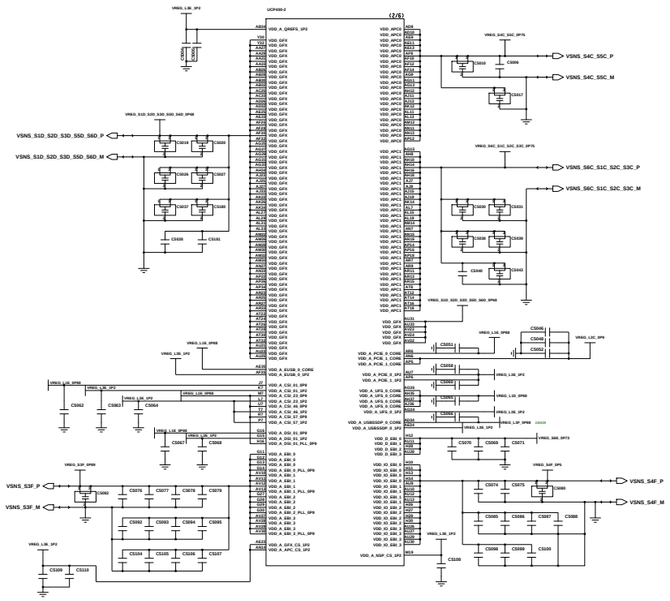

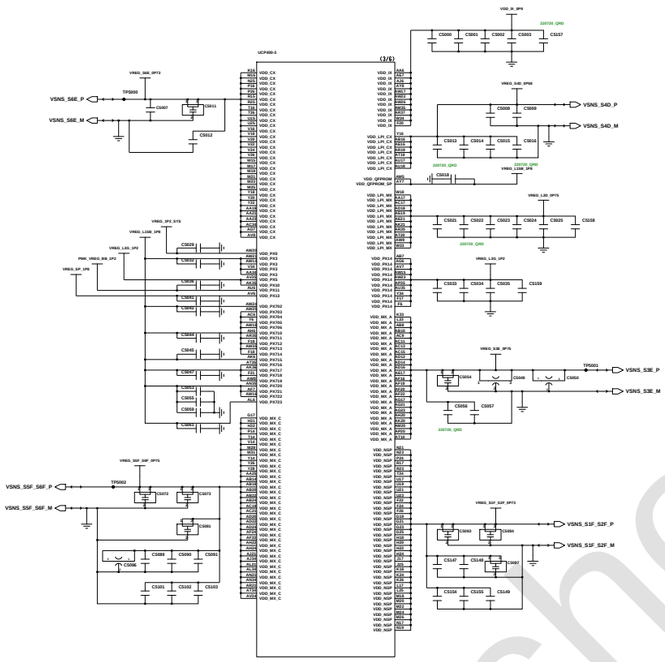

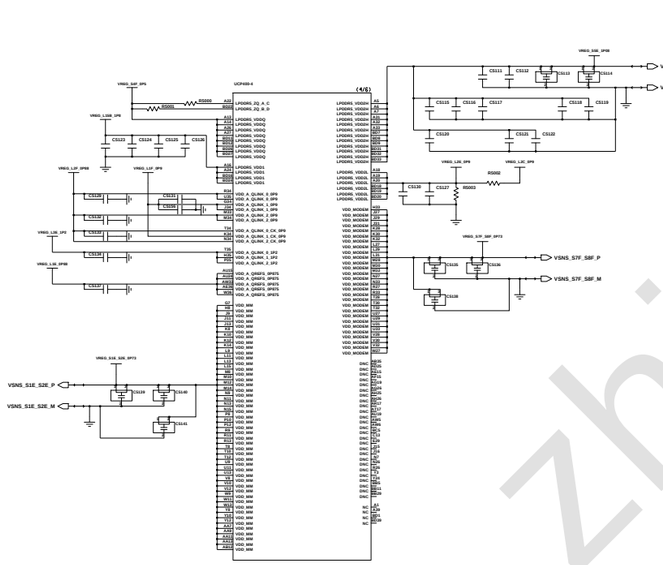

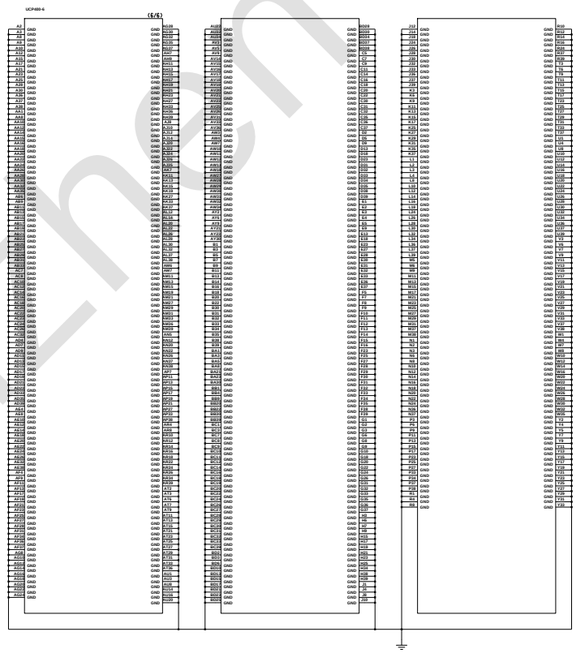

Charger block

Power

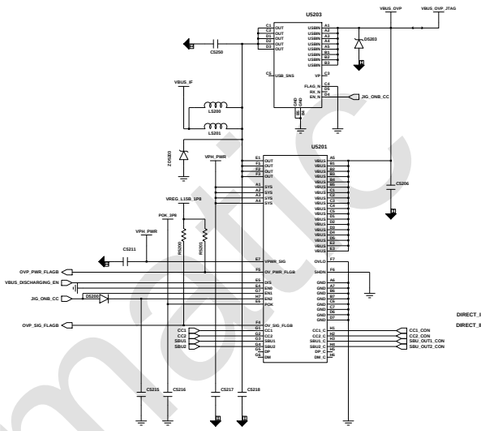

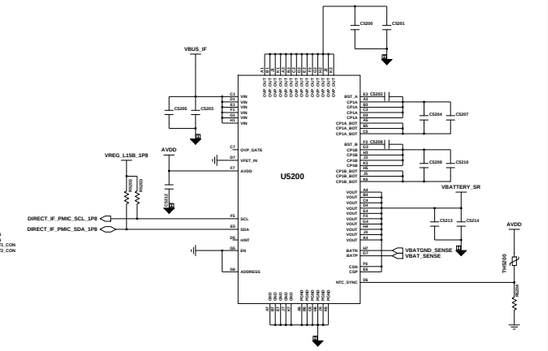

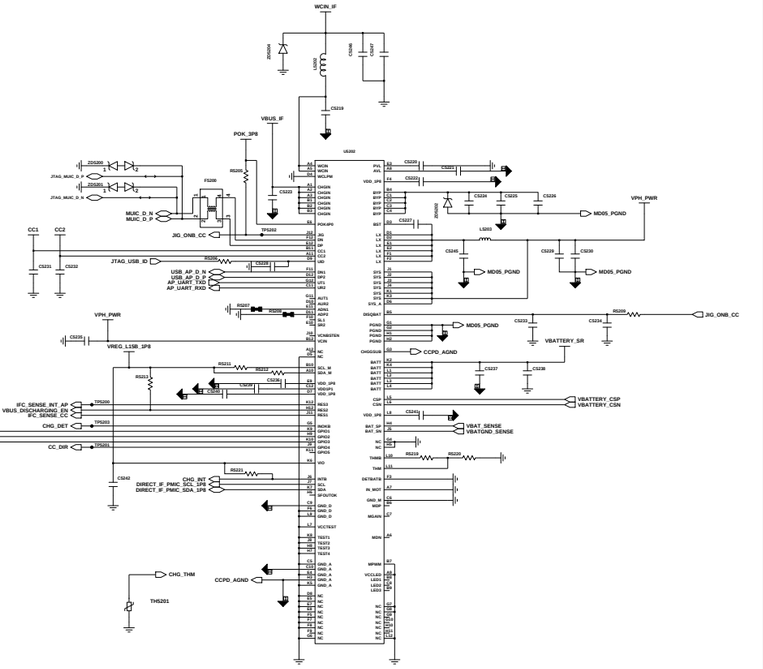

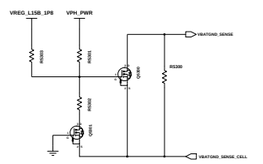

Engineer: SEC	SAMSUNG ELECTRONICS
Schematic by:	
DDC CHK:	TITLE: AP (2/2), Charger Block
DDC CTRL CHK:	Size: 24 X 36 A
MFG SHUB CHK:	
Changed by: Kim Jongsik	Date Changed: Tuesday, January 18, 2022
Time Changed: 12:00:00 am	QA CHK:
REV:	Drawing Number:
Page: 6	

zhizhen schematic

SAMSUNG CONFIDENTIAL
THIS DOCUMENT CONTAINS CONFIDENTIAL
AND PROPRIETARY INFORMATION OF
SAMSUNG ELECTRONICS CO'S PROPERTY.
DO NOT DISCLOSE TO OR DUPLICATE FOR OTHERS
EXCEPT AS AUTHORIZED BY SAMSUNG.

Power System

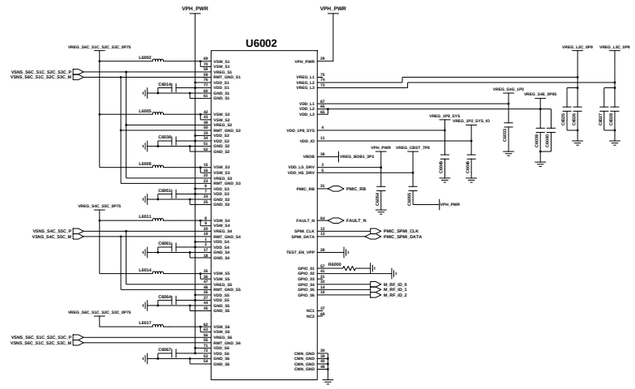

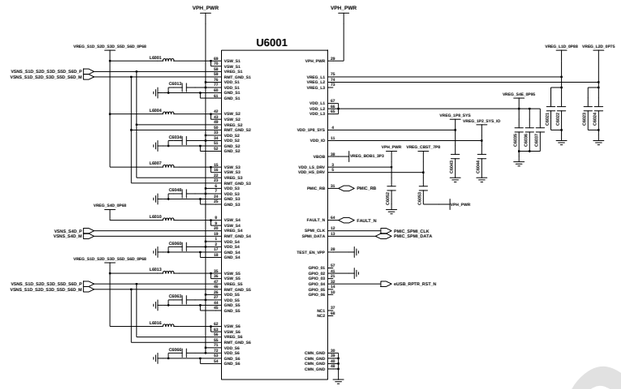

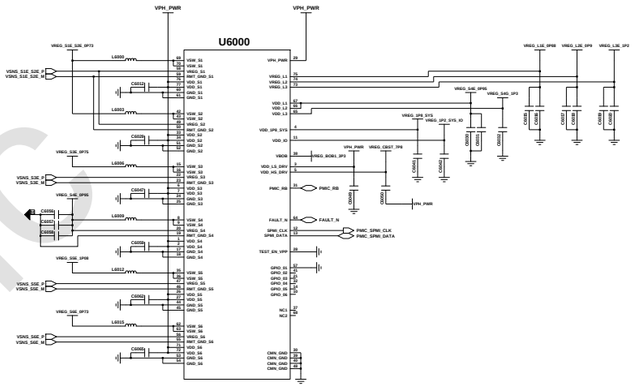

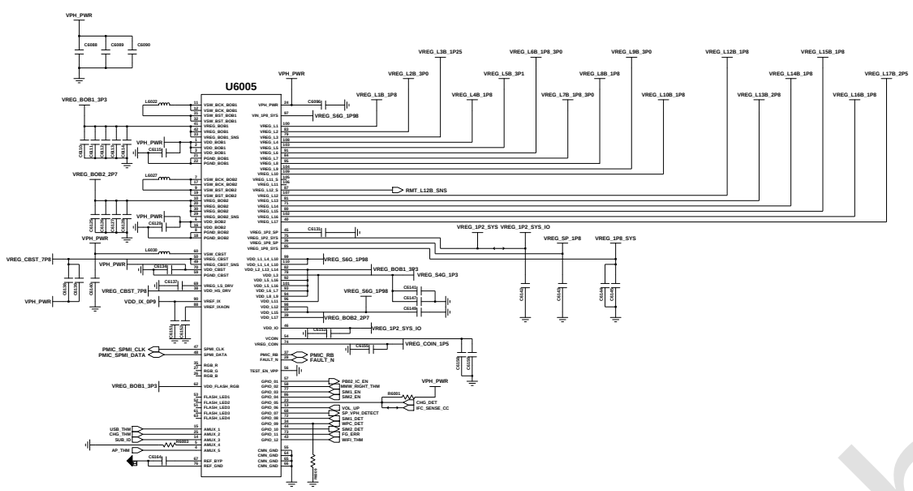

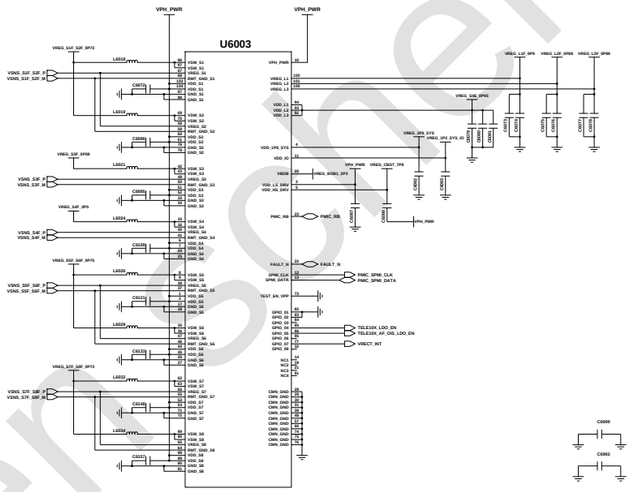

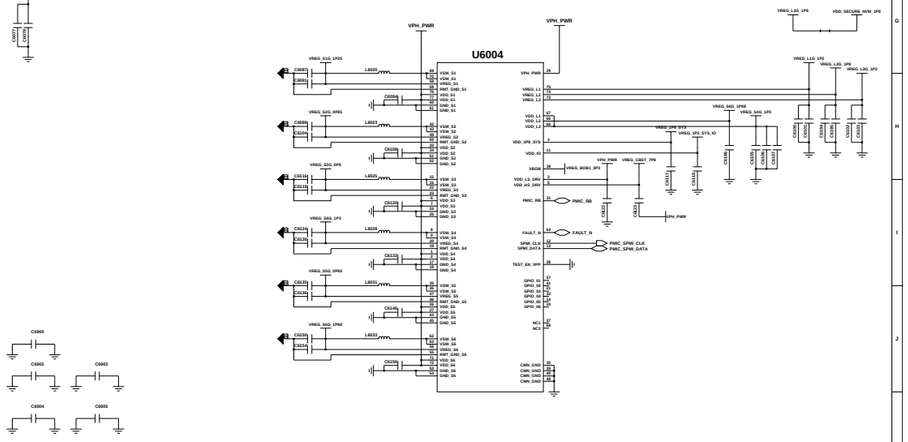

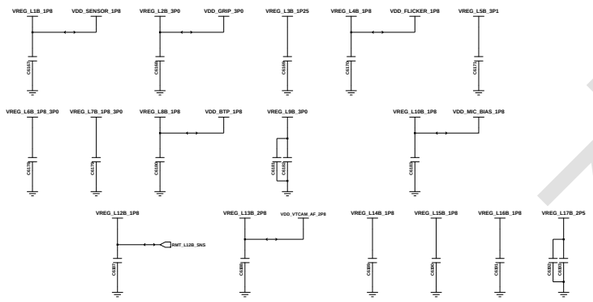

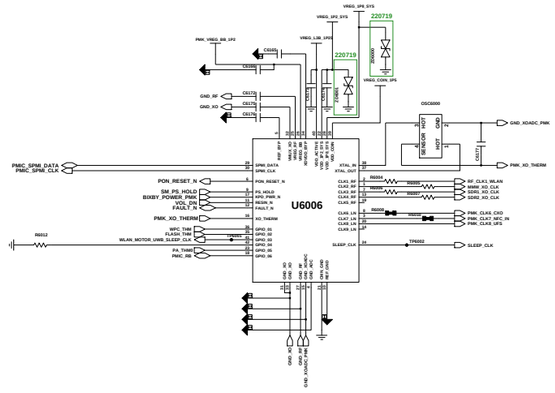

zhizhen

Engineer: SEC	SAMSUNG ELECTRONICS
Schematic by:	
Lead Chk:	TITLE: AP PMIC set, CLK Gen
DDC CTRL CHK:	Size: 24 X 36 A
MFG DIGGR CHK:	
QA CHK:	REV: / Drawing Number: / Page: 7

Changed by: Nickel Jack | Date Changed: Monday, April 19, 2021 | Time Changed: 2:14:32 pm

SAMSUNG CONFIDENTIAL
THIS DOCUMENT CONTAINS CONFIDENTIAL
AND PROPRIETARY INFORMATION OF
SAMSUNG ELECTRONICS CO'S PROPERTY.
DO NOT DISCLOSE TO OR DUPLICATE FOR OTHERS
EXCEPT AS AUTHORIZED BY SAMSUNG.

CAMERA

Visual

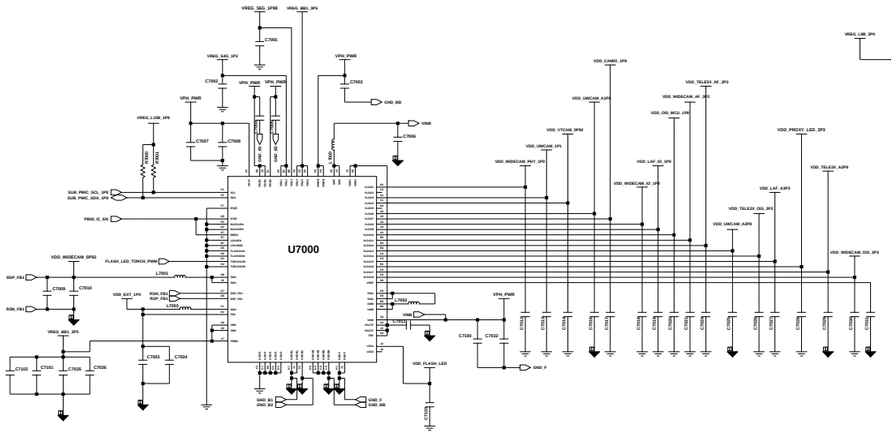

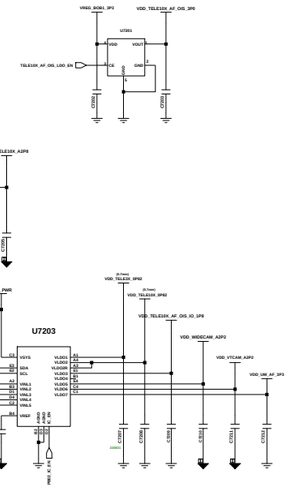

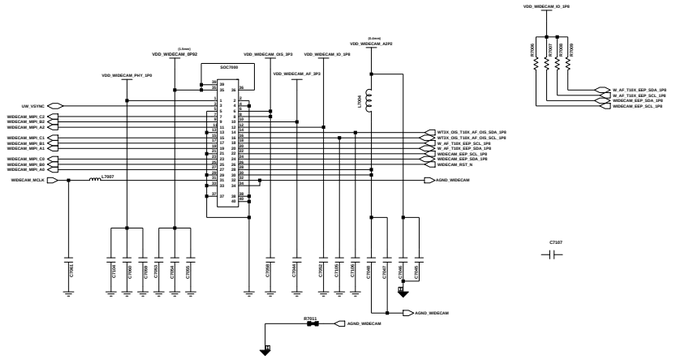

Main Wide CAM

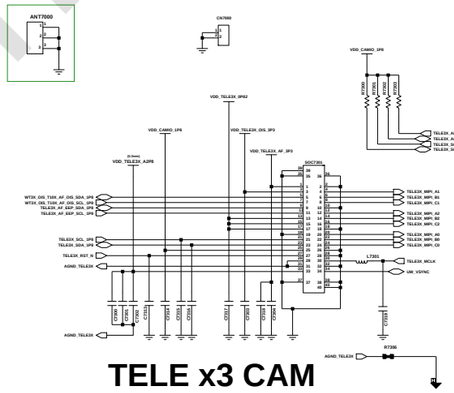

TELE x3 CAM

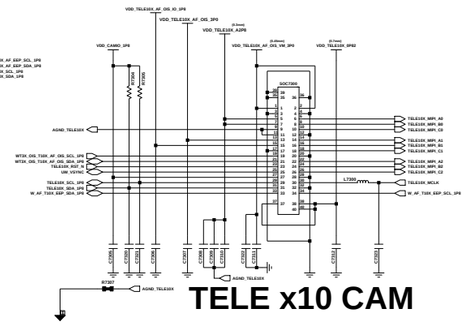

TELE x10 CAM

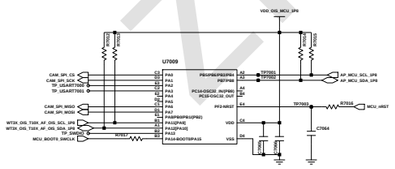

CAM MCU

zhizhen schematic

Engineer:	SAMSUNG ELECTRONICS
Design by:	
Mod Chk:	TITLE: CAMERA, DISPLAY
DOC CTRL Chk:	
MFG ENGR Chk:	
QA Chk:	SIZE / Drawing Number: / Page:

Changed by: Date Changed: Time Changed:

SAMSUNG CONFIDENTIAL
THIS DOCUMENT CONTAINS CONFIDENTIAL
PROPRIETARY INFORMATION THAT IS
SAMSUNG ELECTRONICS CO'S PROPERTY.
DO NOT DISCLOSE TO OR DUPLICATE FOR OTHERS
EXCEPT AS AUTHORIZED BY SAMSUNG.

Power

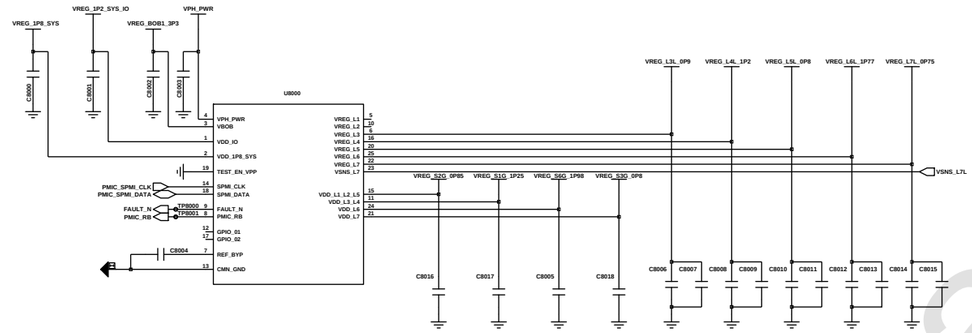

5G IFIC

Radiation

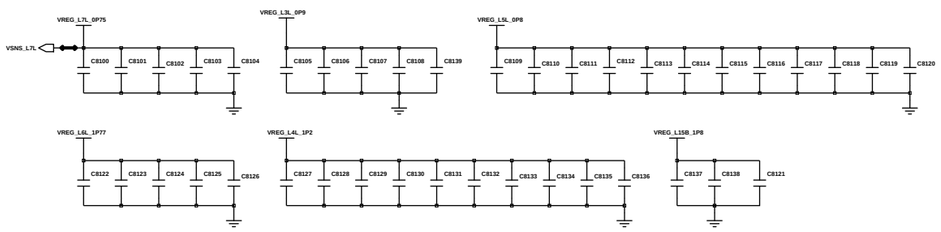

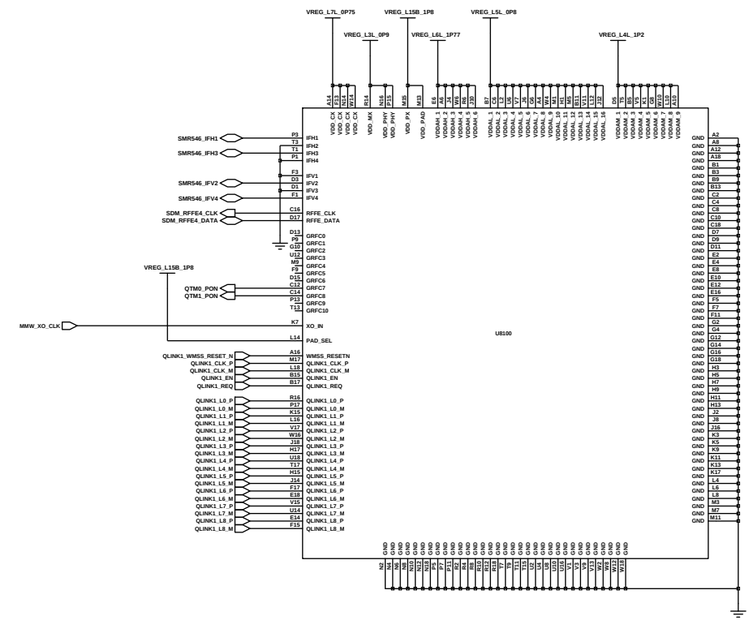

zhizhen schematic

Engineer: SEC	SAMSUNG ELECTRONICS				
Drawn by: SEC					
R&D CHK:	TITLE: 5G IFIC, PMR735D #1			Size: 16 1 12 A	
DOC CTRL CHK:					
MFG ENGR CHK:					
Changed by: hsuan1.kang	Date Changed: Monday, April 19, 2021	Time Changed: 1:21:38 am	QA CHK:	REV:	Drawing Number: Page: 1

SAMSUNG CONFIDENTIAL
THIS DOCUMENT CONTAINS CONFIDENTIAL
INFORMATION PROPRIETARY TO SAMSUNG
SAMSUNG ELECTRONICS CO.'S PROPERTY.
THIS DOCUMENT MUST BE RETURNED UPON
REQUEST AND AUTHORIZED BY SAMSUNG.

INTERPOSER

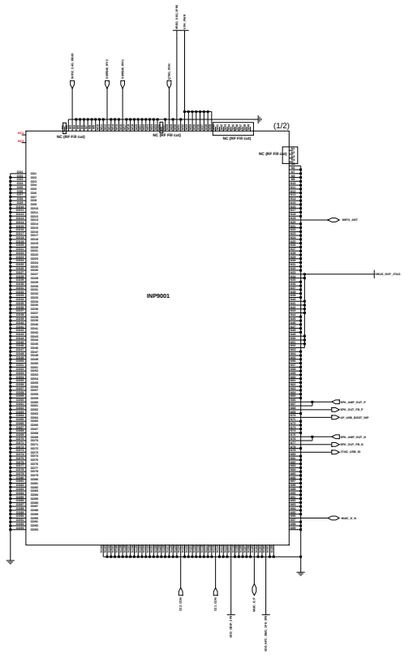

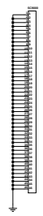

SHIELDCAN

S_AP_ID

S_AP PBA table

ID	ID_2	ID_1	ID_0	
0	L	L	L	NA_mmW
1	L	L	H	NA_CAN_Sub6
2	L	H	L	CHN_SUB6
3	L	H	H	N/A
4	H	L	L	JPN_mmW
5	H	L	H	KOR_SUB6
6	H	H	L	EUR_SUB6 Global_SUB6
7	H	H	H	N/A

8/256
12/256
12/512
12/1T

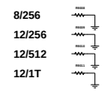

2D BARCODE

BOSS HOLE

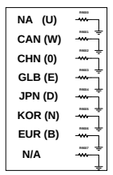

zhizhen schematic

Engineer		SAMSUNG ELECTRONICS	
Model No			
ECF Code		Title	Size
Input Power Type			
Main Board Name			
Sub Board Name			
Sub Board		Drawing Number	Rev

SAMSUNG CONFIDENTIAL
THIS DOCUMENT CONTAINS CONFIDENTIAL
PROPRIETARY INFORMATION THAT IS
SAMSUNG ELECTRONICS CO'S PROPERTY.
DO NOT DISCLOSE TO OR DUPLICATE FOR OTHERS
EXCEPT AS AUTHORIZED BY SAMSUNG.

SM-S918U_M_RF

2022.10.25

SHEET01 : RF (1/2)
SHEET02 : RF (2/2), RF PMIC #1
SHEET03 : BT/WIFI, UWB
SHEET04 : Battery Conn, W/C Conn, MFC, Sensor
SHEET05 : IF SUB Conn, MOTOR DRV IC, RCV Conn, MIC
SHEET06 : DISPLAY PMIC, DISPLAY Conn, DIGITIZER, CAM Conn
SHEET07 : INTERPOSER

zhizhensch

Engineer:
Drawn by:
R&D CHK:
DOC CTRL CHK:
MFG ENGR CHK:
QA CHK:
TITLE:
Size:
REV
Drawing Number:
Page:
Changed by: 92nd
Date Changed:
Time Changed:

SAMSUNG CONFIDENTIAL
THIS DOCUMENT CONTAINS CONFIDENTIAL
AND PROPRIETARY INFORMATION OF
SAMSUNG ELECTRONICS CO. LTD. PROPERTY.
DO NOT DISCLOSE TO OR DUPLICATE FOR OTHERS
EXCEPT AS AUTHORIZED BY SAMSUNG.

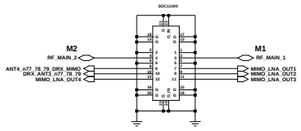

MAIN FRC

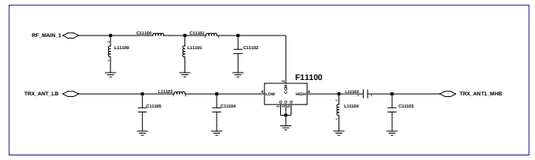

MAIN1 ANT (LB,MB,JPN B21)

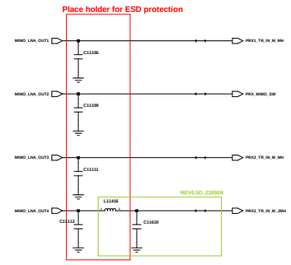

MHB MIMO_LNA OUT

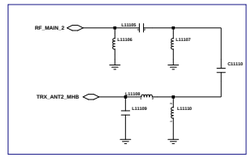

MAIN2 ANT (HB_n41)

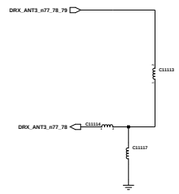

MAIN ANT3 (B48_n77/78/79)

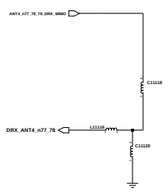

MAIN ANT4 (n77/78/79)

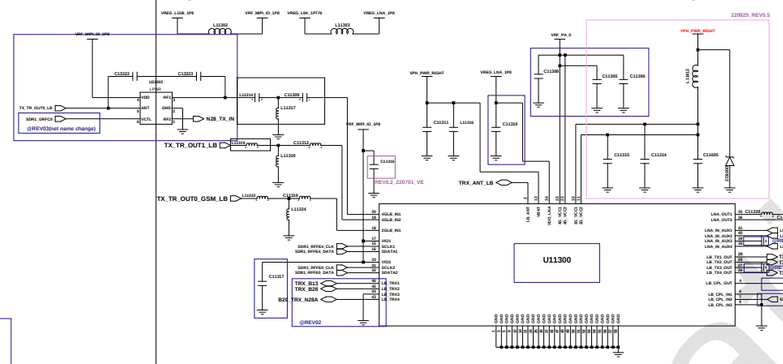

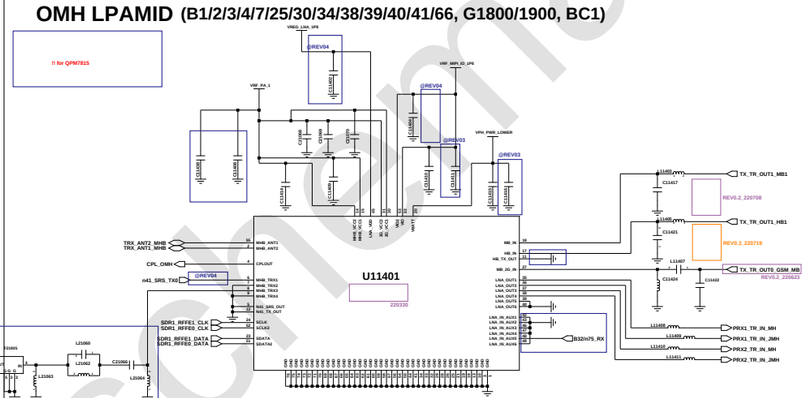

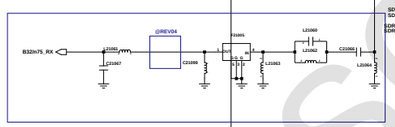

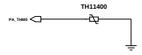

THERMISTERS

n77/78

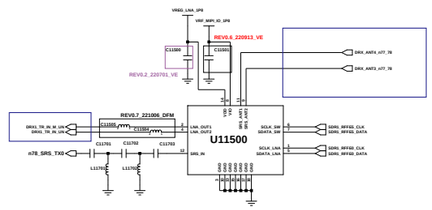

ET Modulator(QET6105#0)

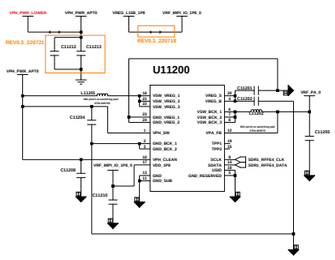

ET Modulator(QET6105#1)

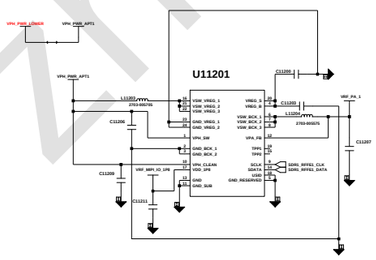

zhizhen schematic

Engineer:	SEC
Drawn by:	SEC
R&D Code:	
DOC CTRL Code:	
BFG DOCR Code:	
QA Code:	
TITLE:	RF (1/2)
Size:	
REV:	
Drawing Number:	
Changed by:	PHN
Date Changed:	
Time Changed:	

SAMSUNG CONFIDENTIAL
THIS DOCUMENT CONTAINS CONFIDENTIAL
AND PROPRIETARY INFORMATION OF
SAMSUNG ELECTRONICS CO. LTD.
DO NOT DISCLOSE TO OR DUPLICATE FOR OTHERS
EXCEPT AS AUTHORIZED BY SAMSUNG.

TRANSCEIVER(Dual SDR735)

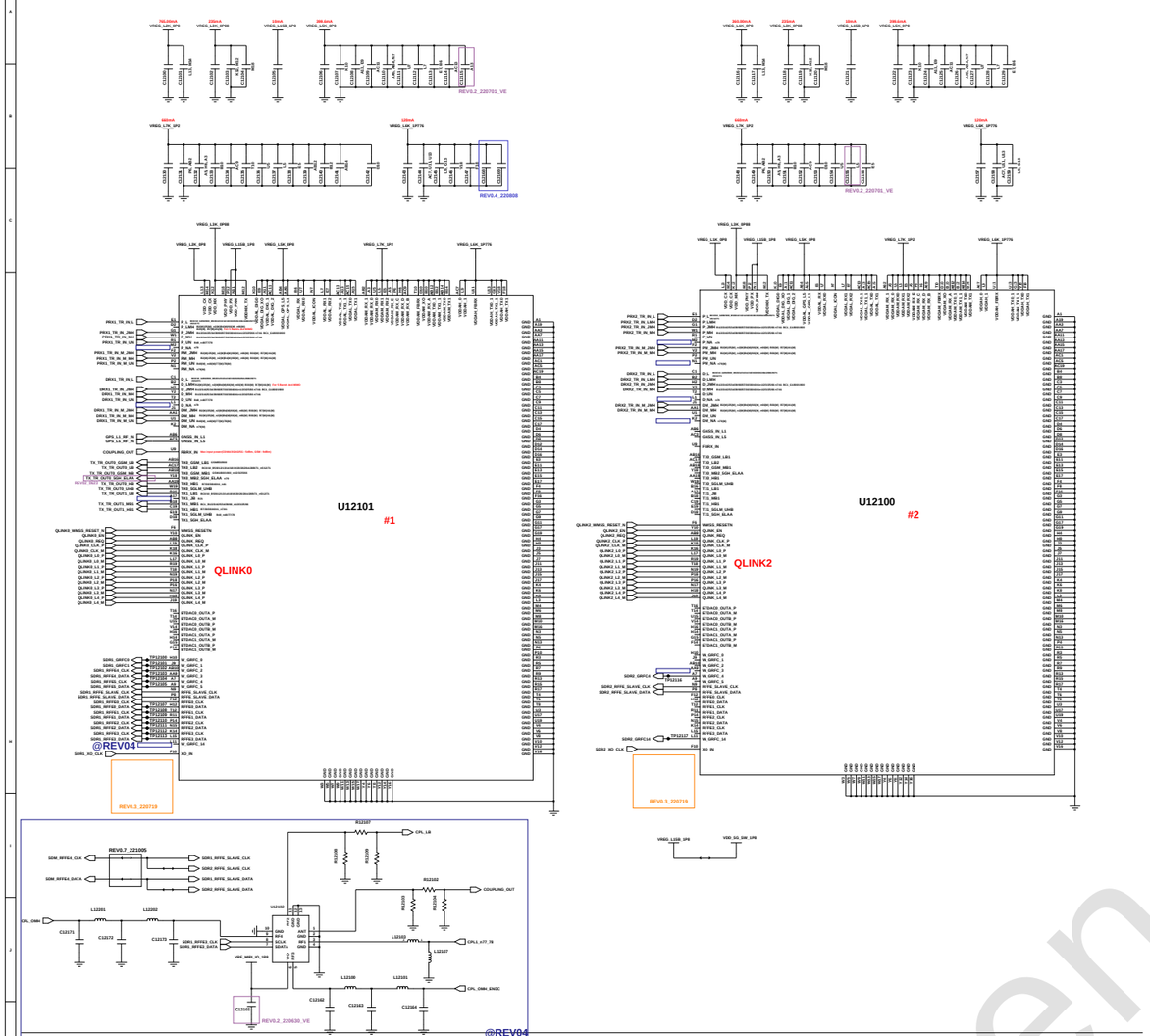

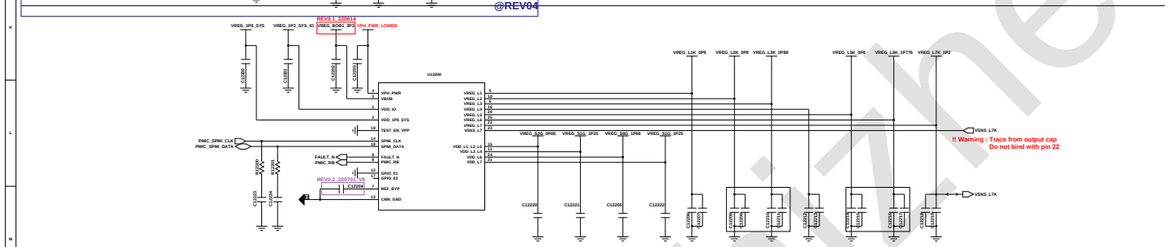

PMR735D #0

DRX_ANT

SUB ANT1_Frame
(lb_hb)

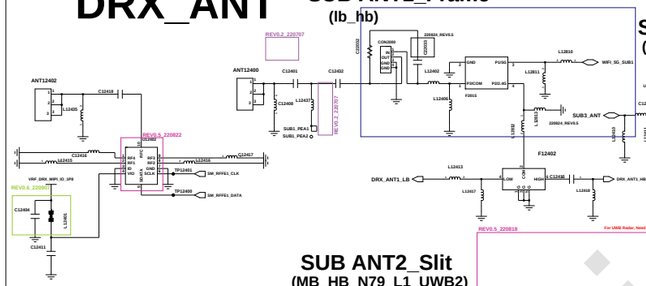

SUB3
(N77/78_WIFI 5G)

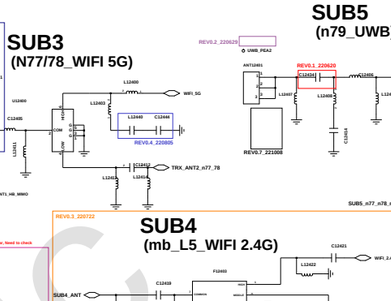

SUB5
(n79_UWB)

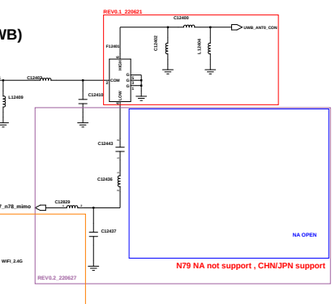

SUB ANT2_Slit
(MB_HB_N79_L1_UWB2)

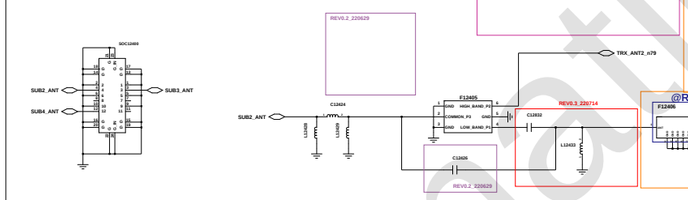

SUB4
(mb_L5_WIFI 2.4G)

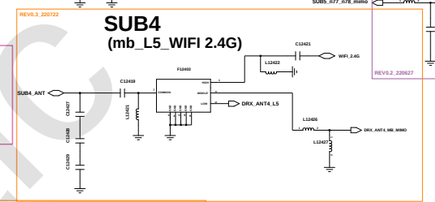

CCP

DRX_LB
(B5/8/12/13/14/17/18/19/20/26/28/29/71_BC0/10_G850/900)

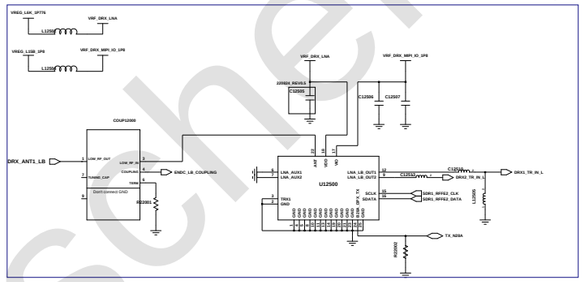

DRX_MHB_2
(B2/4/7/25/30/41/66)

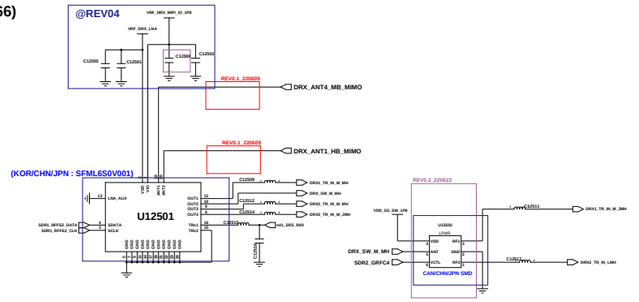

QET6105 #2

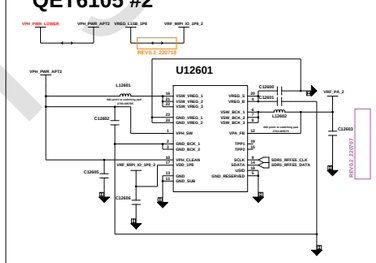

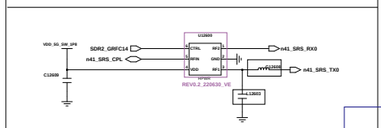

ENDC module
(B1/2/3/4/7/25/30/39/41/66_BC1_DCS/PCS)

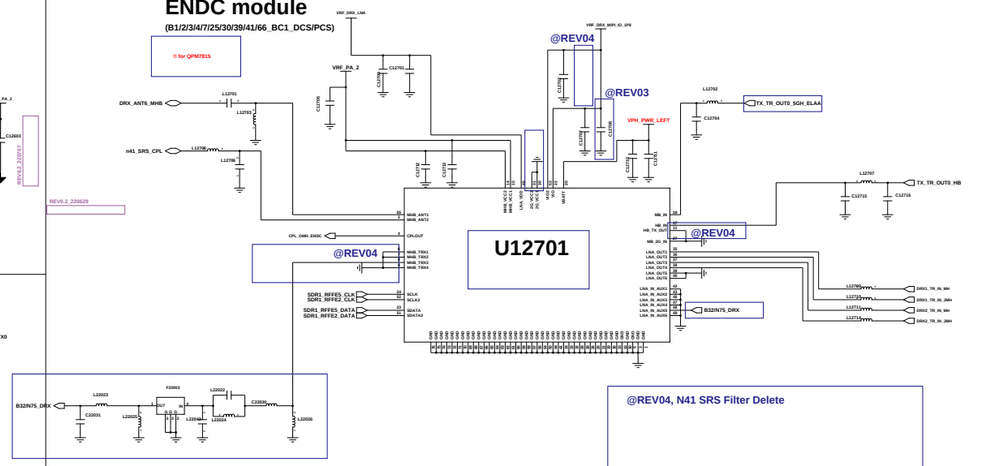

GPS_L1(for SUB4 opt)

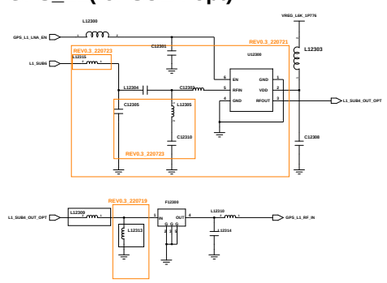

GPS_L5

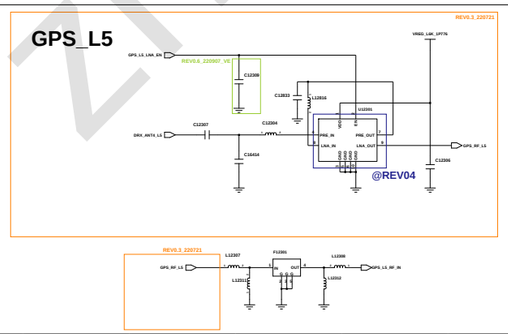

UHB
(B48, n77/78)

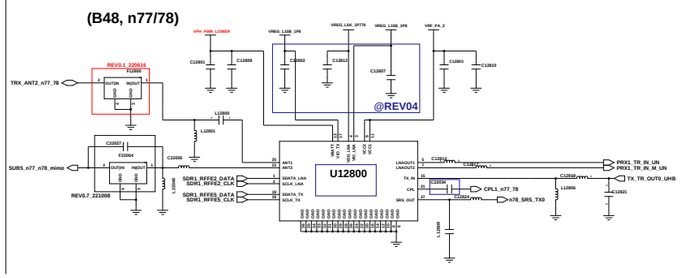

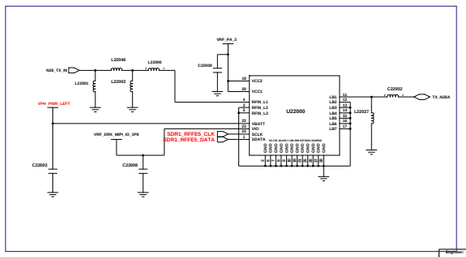

RF (2/2)

zhizhen schematic

SAMSUNG CONFIDENTIAL
THIS DOCUMENT CONTAINS CONFIDENTIAL
AND PROPRIETARY INFORMATION OF
SAMSUNG ELECTRONICS CO'S PROPERTY.
DO NOT DISCLOSE TO OR DUPLICATE FOR OTHERS
EXCEPT AS AUTHORIZED BY SAMSUNG.

WIFI (WCN7851 CoB)

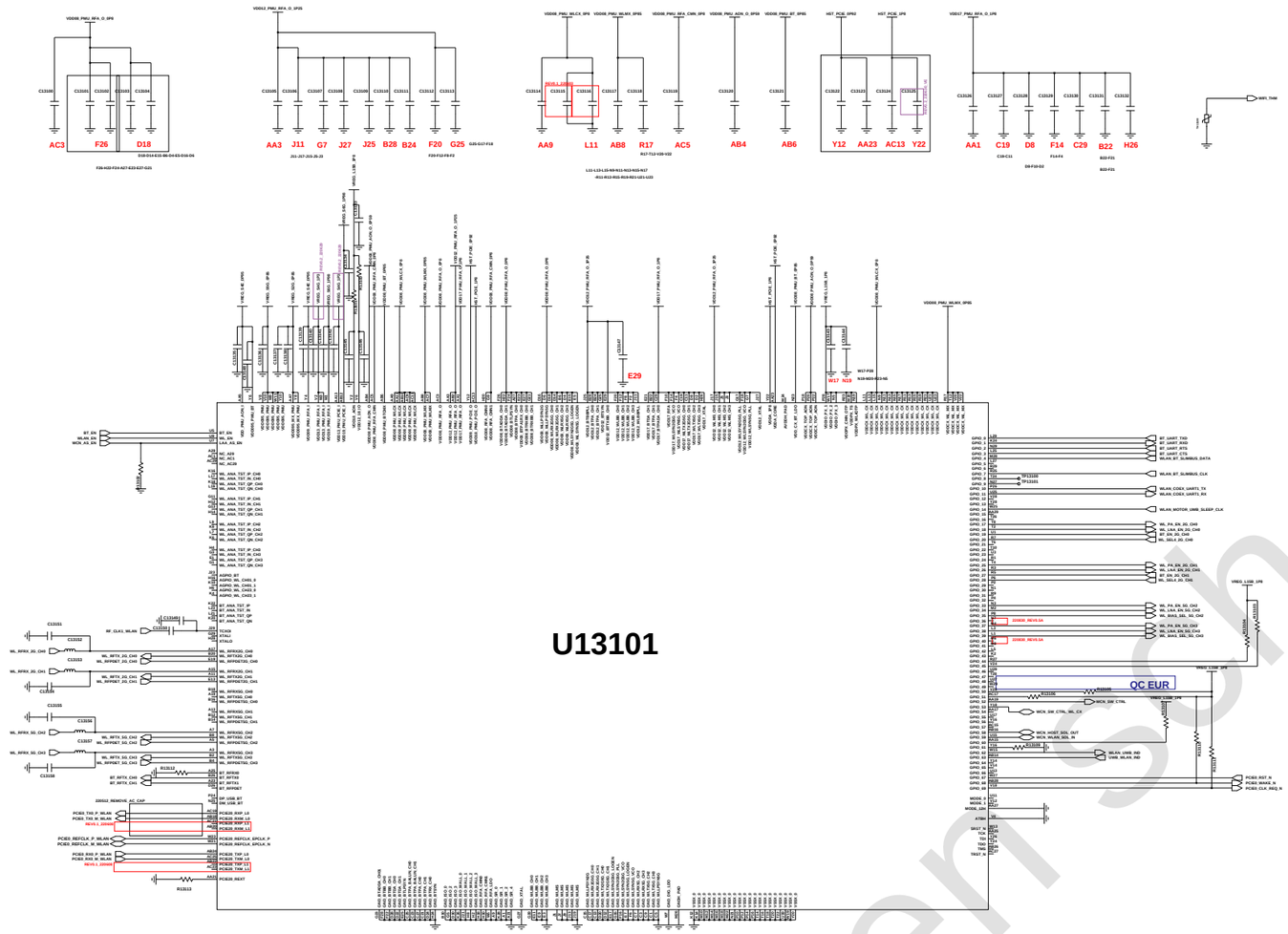

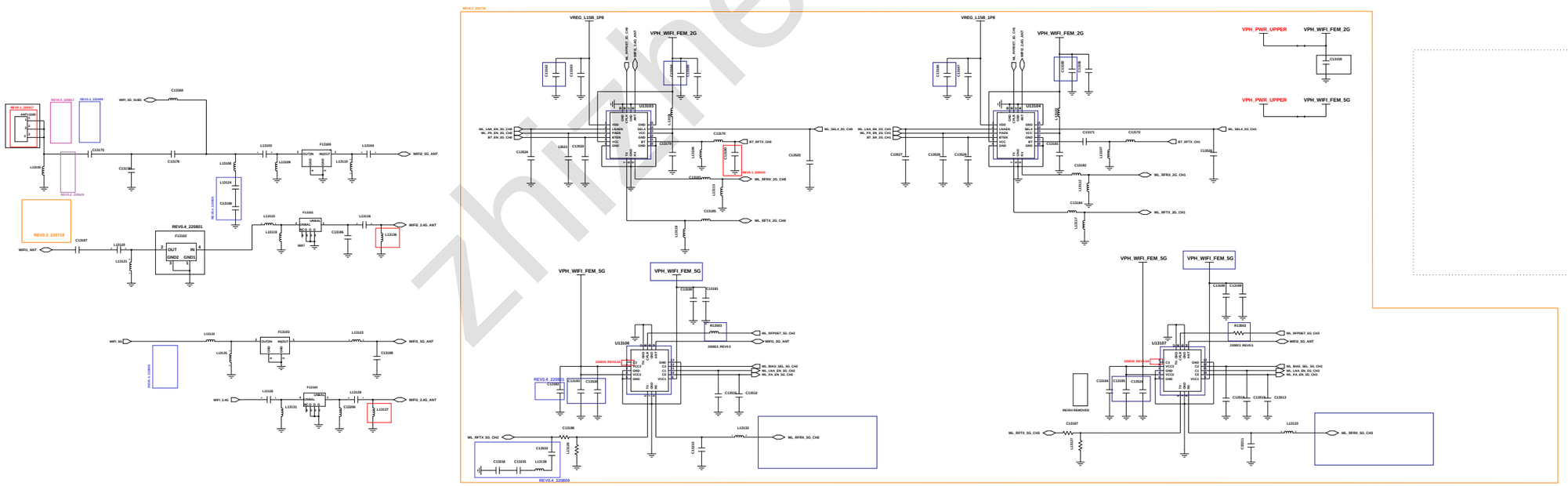

UWB

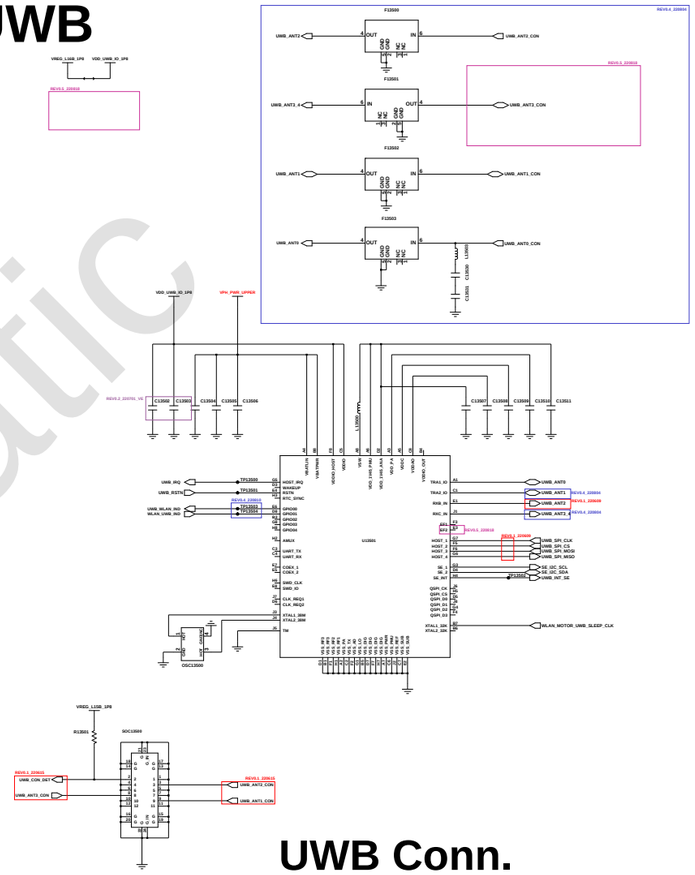

zhizhen schematic

Engineer:	SAMSUNG ELECTRONICS
Drawn by:	
Checked by:	TITLE: BT/WiFi, UWB
DDC CTRL CHK:	Size: A4 / 16 A
MFG ENGR CHK:	
Q/A CHK:	REV: Drawing Number: Page:

Changed by: Date Changed: Time Changed:

SAMSUNG CONFIDENTIAL
THIS DOCUMENT CONTAINS CONFIDENTIAL PROPRIETARY INFORMATION THAT IS SAMSUNG ELECTRONICS CO'S PROPERTY. DO NOT DISCLOSE TO OR DUPLICATE FOR OTHERS EXCEPT AS AUTHORIZED BY SAMSUNG.

Power

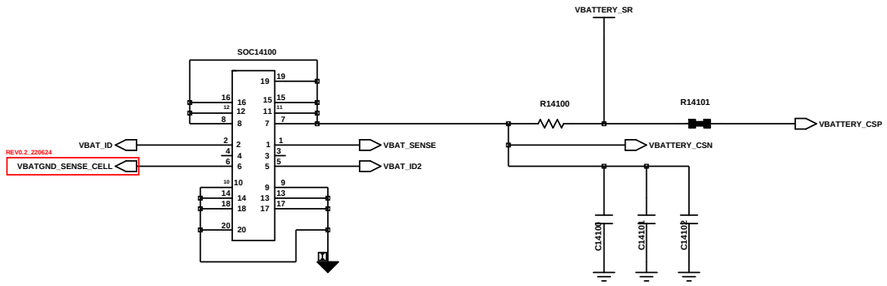

Battery Connector

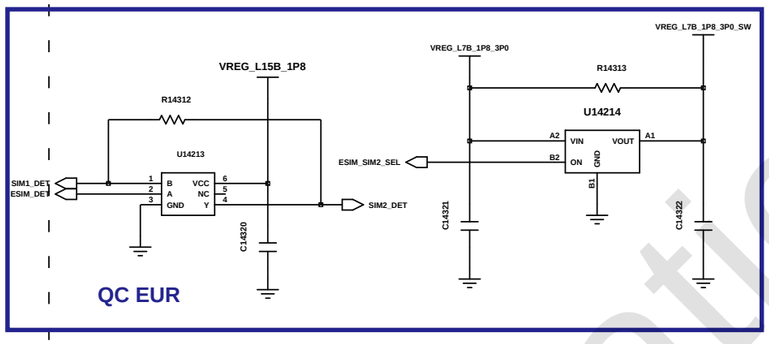

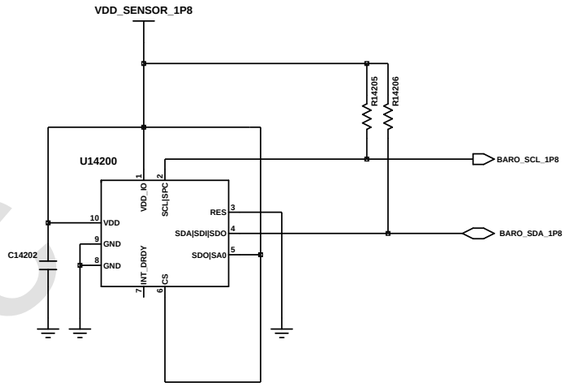

Barometer SENSOR

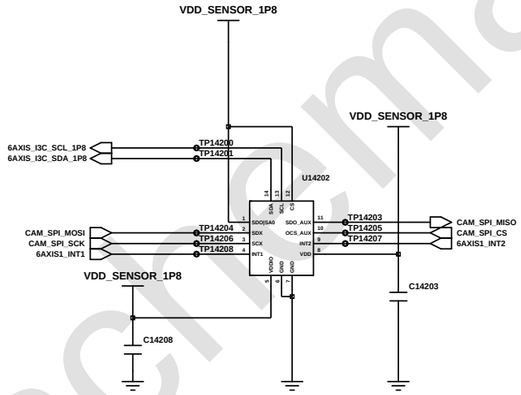

6 Axis SENSOR (GYRO,ACCEL)

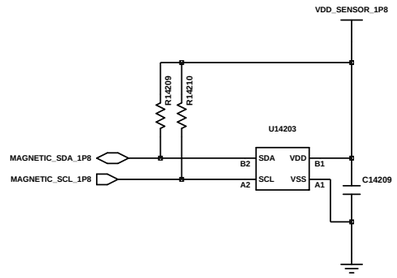

Magnetic SENSOR

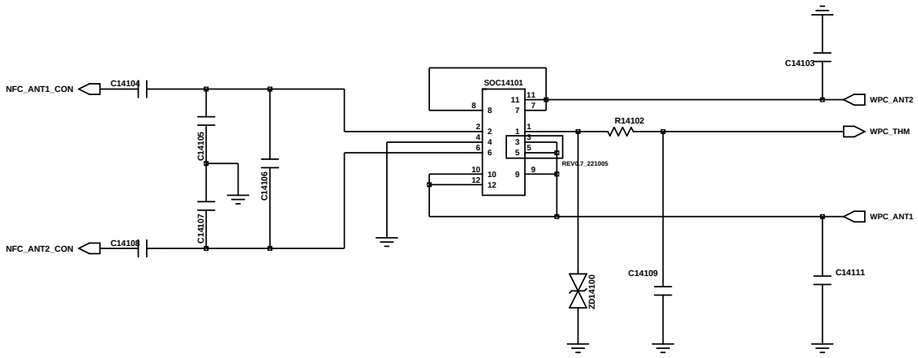

W/C CONNECTOR

REV0.5_220816

REV0.2_220704

MST SW

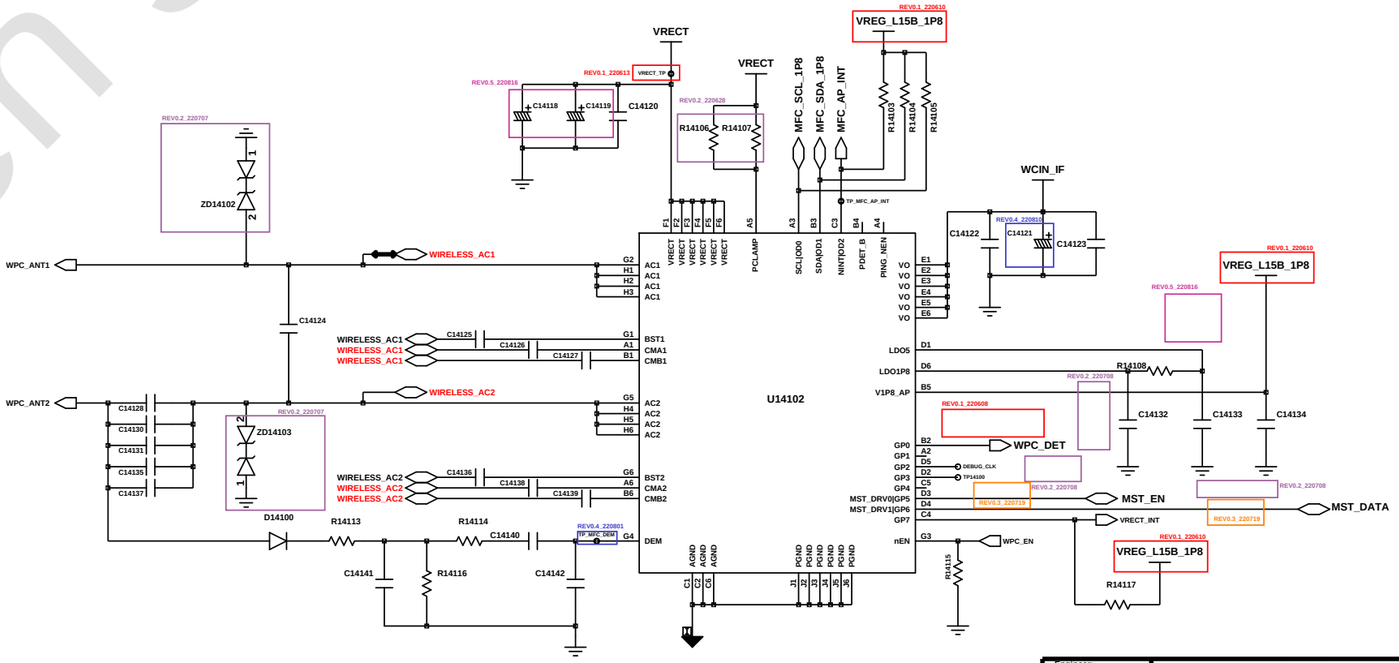

MFC

Engineer: SEC	SAMSUNG ELECTRONICS		
Drawn by: SEC			
R&D CHK:	TITLE: DM1_R00_M_RF_220511_START	Size: 12 1 8 A	
DOC CTRL CHK:			
MFG ENGR CHK:			
Changed by: ki100.kim	Date Changed: Tuesday, May 10, 2022	Time Changed: 5:58:13 pm	QA CHK:
REV:	Drawing Number:	Page: 4	

zhizhen schematic

SAMSUNG CONFIDENTIAL
THIS DOCUMENT CONTAINS CONFIDENTIAL PROPRIETARY INFORMATION THAT IS SAMSUNG ELECTRONICS CO'S PROPERTY. DO NOT DISCLOSE TO OR DUPLICATE FOR OTHERS EXCEPT AS AUTHORIZED BY SAMSUNG.

System

AUDIO

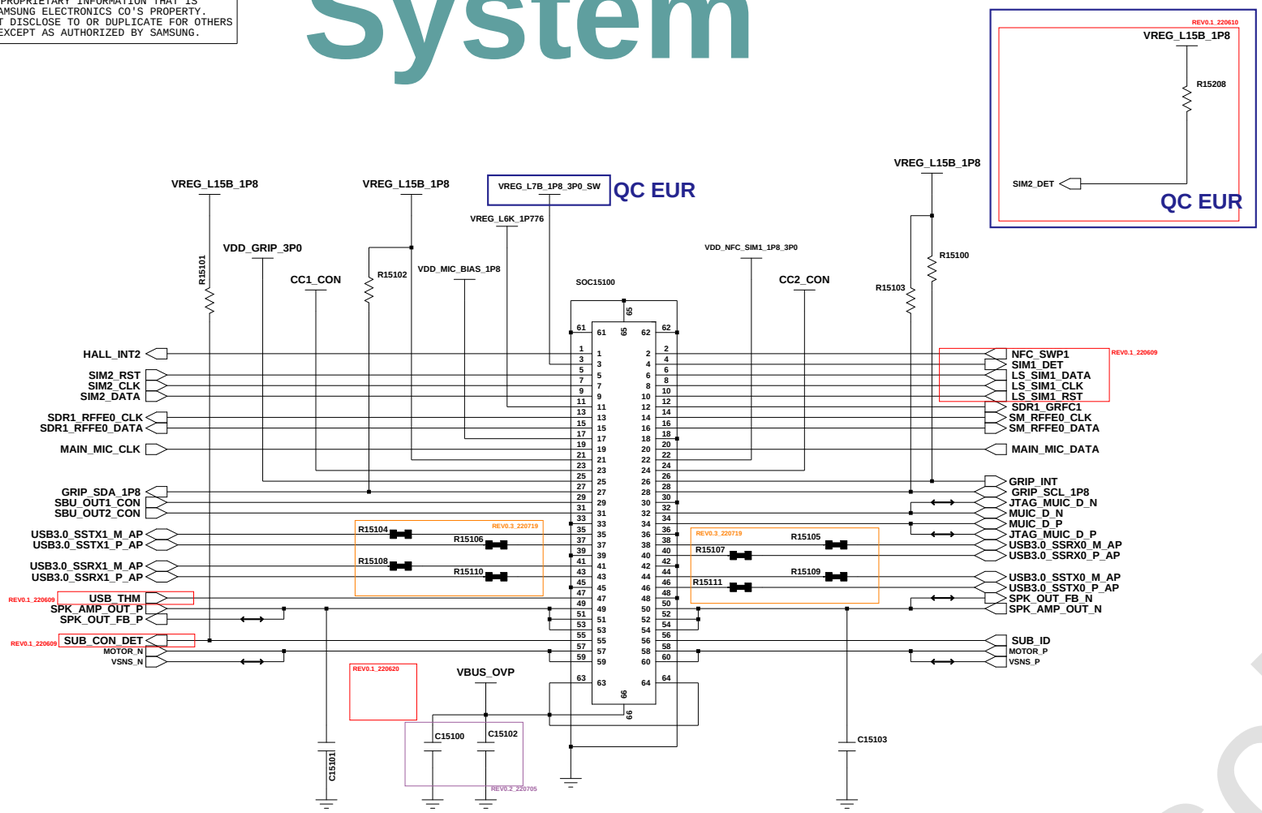

IF SUB PBA Conn

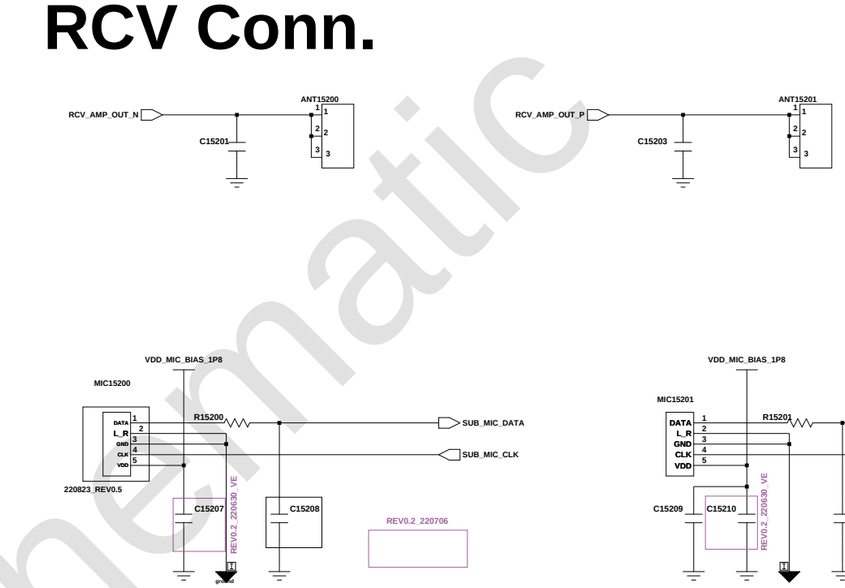

RCV Conn.

2nd MIC

3rd MIC

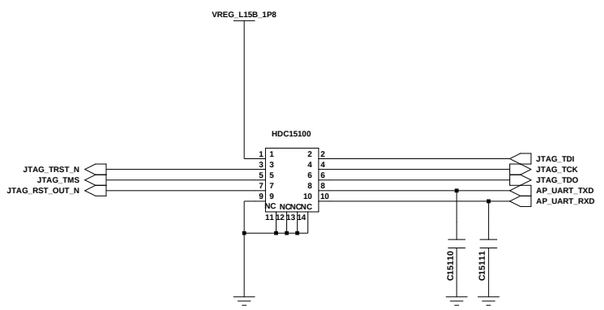

JTAG Conn

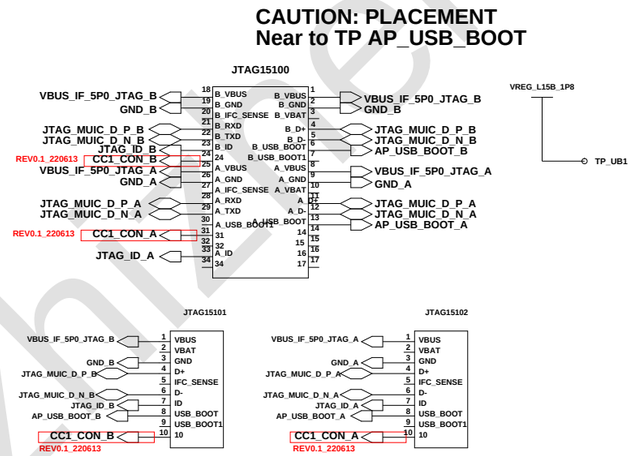

PCB array JTAG

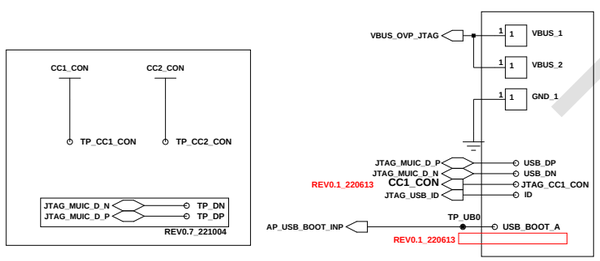

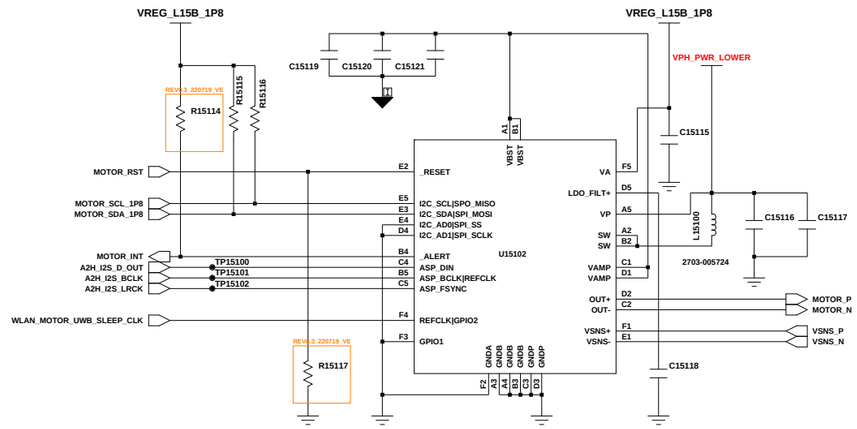

MOTOR DRV IC

zhiyuan schematic

Engineer: SEC	SAMSUNG ELECTRONICS		
Drawn by: SEC			
R&D CHK:	TITLE: AUDIO	Size: 12 1 8 A	
DOC CTRL CHK:			
MFG ENGR CHK:			
Changed by: hanvit.kang	Date Changed: Monday, April 19, 2021	Time Changed: 1:57:58 pm	QA CHK:
REV:	Drawing Number:	Page: 8	

SAMSUNG CONFIDENTIAL
THIS DOCUMENT CONTAINS CONFIDENTIAL
AND PROPRIETARY INFORMATION OF
SAMSUNG ELECTRONICS CO'S PROPERTY.
DO NOT DISCLOSE TO OR DUPLICATE FOR OTHERS
EXCEPT AS AUTHORIZED BY SAMSUNG.

CAMERA

Visual

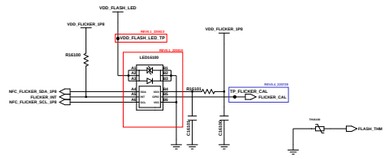

Flash & Flicker sensor

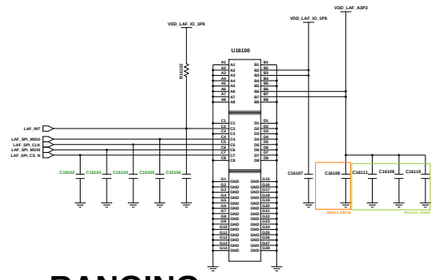

RANGING sensor

CAM PMIC (PB02)

Wide CAM

Tele CAM

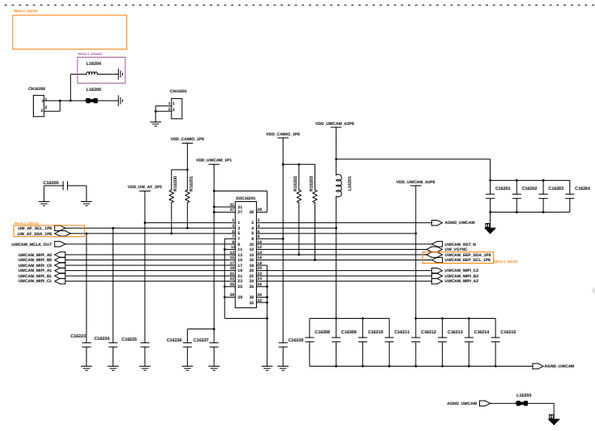

ULTRA WIDE CAM

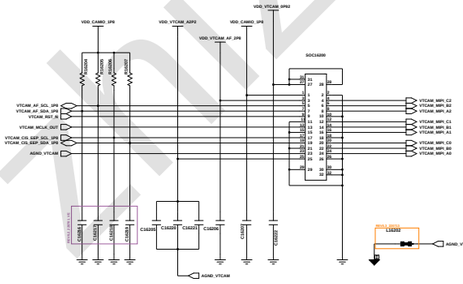

FRONT CAM

CAM MCU

DISPLAY

Visual

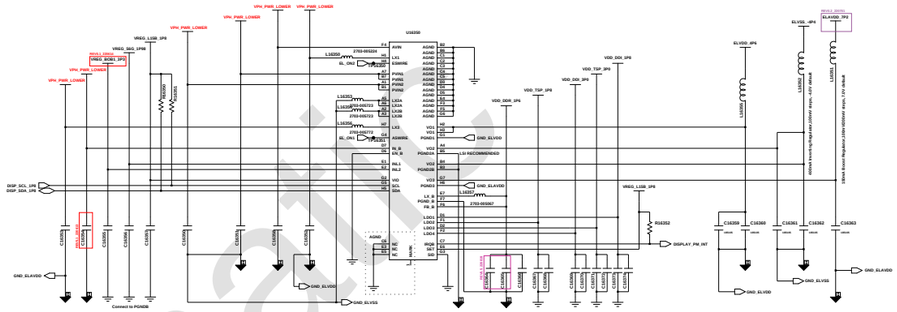

DISPLAY PMIC

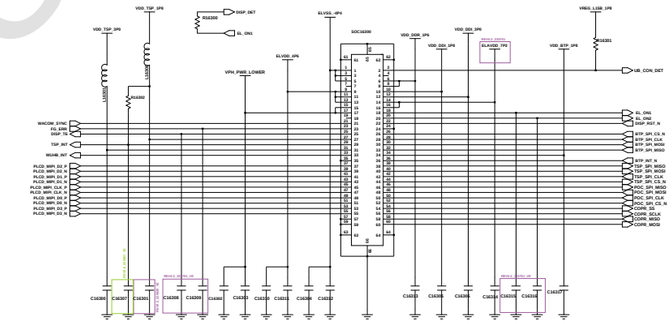

DISPLAY CONNECTOR

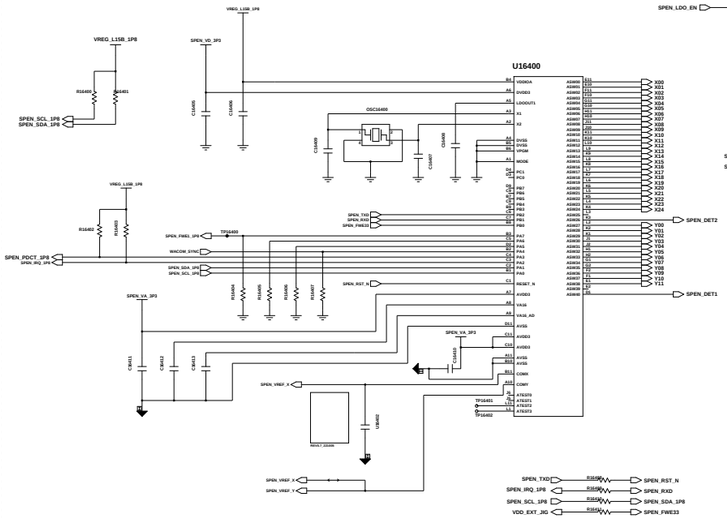

DIGITIZER(WEZ02)

DIGITIZER TP

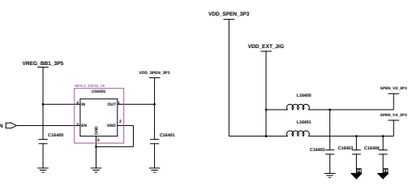

SPEN_DET

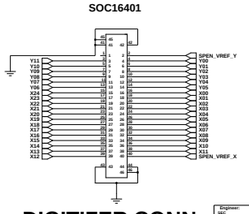

SOC16401

DIGITIZER CONN.

SAMSUNG ELECTRONICS

CAMERA, DISPLAY

Zhizhen schematic

SAMSUNG CONFIDENTIAL
THIS DOCUMENT CONTAINS CONFIDENTIAL
AND PROPRIETARY INFORMATION OF
SAMSUNG ELECTRONICS CO.'S PROPERTY.
NO PART OF THIS DOCUMENT MAY BE DISTRIBUTED
EXCEPT AS AUTHORIZED BY SAMSUNG.

INTERPOSER Design

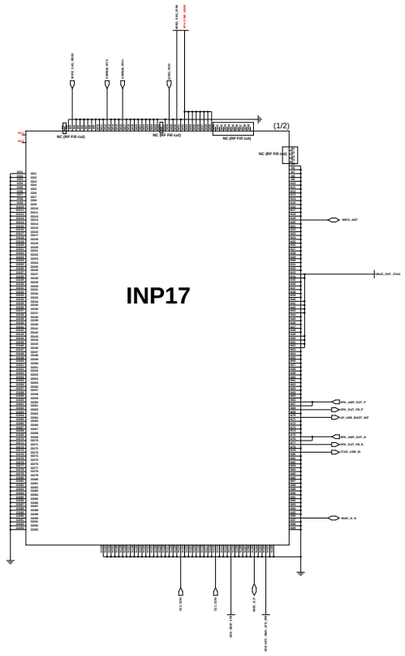

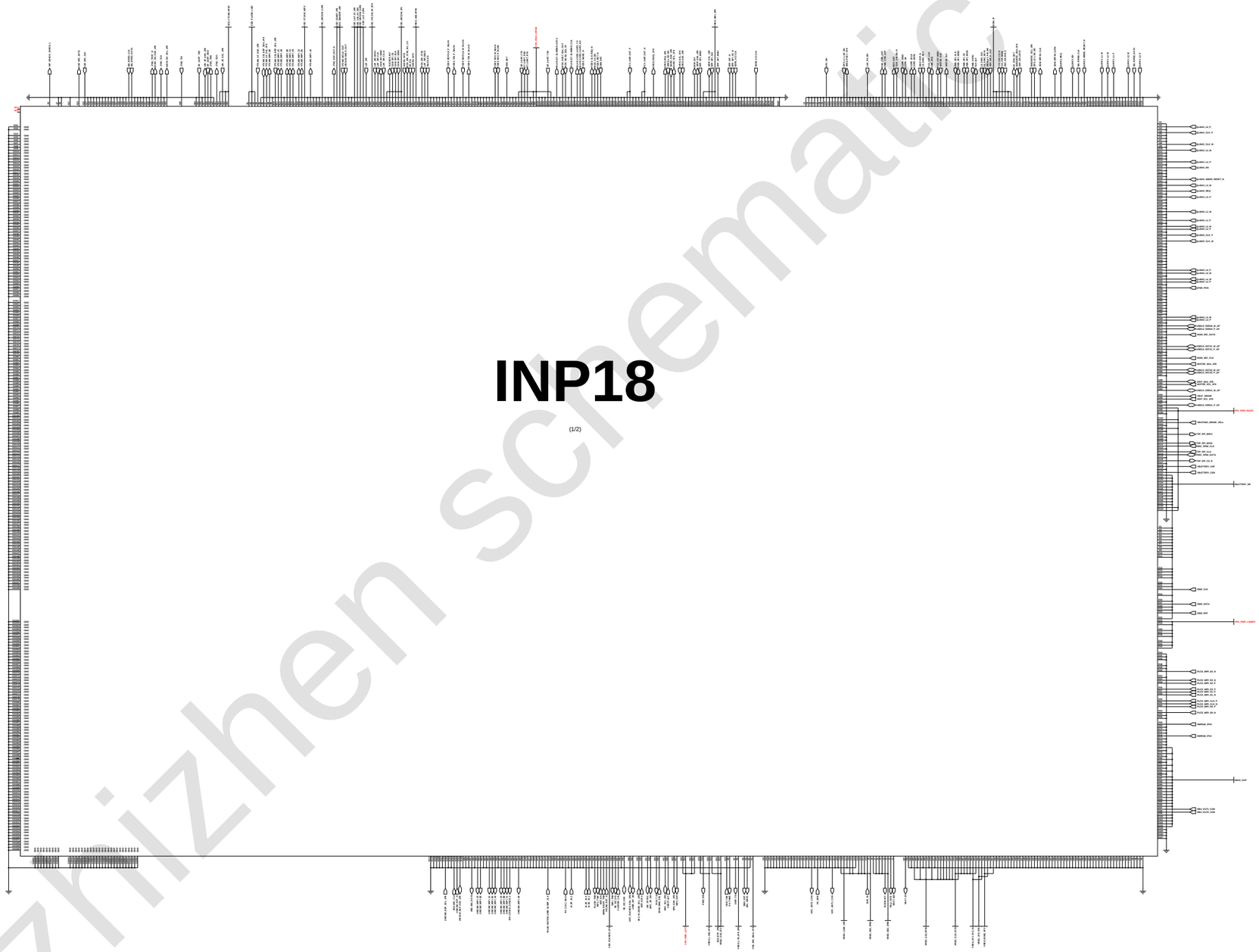

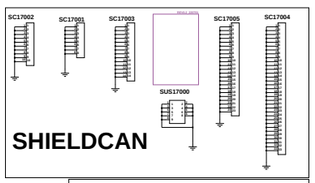

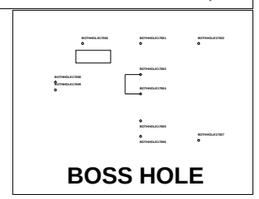

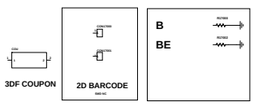

M_RF PBA table

ID	ID_2	ID_1	ID_0	DM3_M_RF
0	L	L	L	NA_mmW
1	L	L	H	NA_CAN_Sub6
2	L	H	L	CHN_SUB6
3	L	H	H	Global_SUB6
4	H	L	L	JPN_mmW
5	H	L	H	KOR_SUB6
6	H	H	L	EUR_SUB6
7	H	H	H	N/A

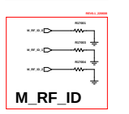

zhizhen schematic

Engineer:	SAMSUNG ELECTRONICS		
Master No:			
ECO CODE:	Title:		Size:
NEW ERROR CODE:			
DP CODE:	REV:	Drawing Number:	Page:

Changed By: Jongsung Ha | Date Changed: Monday, June 08, 2020 | Time Changed: 15:01:16 PM