Module 4
ELECTRICAL DISCHARGE MACHINING (EDM) & PLASMA ARC MACHINING (PAM)

Aditya Kudva S
Assistant Professor (Sr.)
Department of Mechanical Engineering
SMVITM, Bantakal

ELECTRICAL DISCHARGE MACHINING (EDM): Introduction, mechanism of metal removal, EDM equipment: spark erosion generator (relaxation type), dielectric medium-its functions & desirable properties, electrode feed control system. Flushing types; pressure flushing, suction flushing, side flushing, pulsed flushing. EDM process parameters: Spark frequency, current & spark gap, surface finish, Heat Affected Zone. Advantages, limitations & applications of EDM, Electrical discharge grinding, Traveling wire EDM.

PLASMA ARC MACHINING (PAM): Introduction, non-thermal generation of plasma, equipment mechanism of metal removal, Plasma torch, process parameters, process characteristics. Safety precautions. Safety precautions, applications, advantages and limitations.

ELECTRICAL DISCHARGE MACHINING (EDM): Introduction

EDM is a thermoelectric process used to remove metal via a series of discrete sparks between the metal and workpiece.

In EDM an electric spark is used as the cutting tool to cut (erode) the workpiece and produce the finished part to the required shape.

Electricity flows through the electrode in the form of a square wave attacking the points of least resistance on the workpiece, similar to a bolt of lightning hitting a tree before it hits the ground.

EDM process is also known as spark erosion machining, spark machining, die sinking, wire erosion.

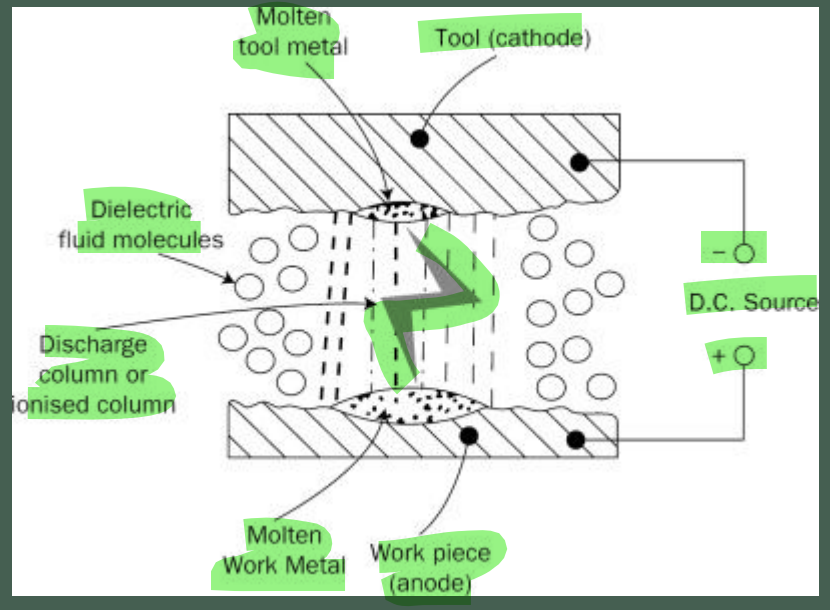

ELECTRICAL DISCHARGE MACHINING (EDM): Introduction

The process of material removal by a controlled erosion through a series of electric sparks, commonly known as electric discharge machining.

When a discharge takes place between two points of the anode and the cathode, the intense heat generated near the zone melts and evaporates the materials in the sparking zone. For improving the effectiveness, the work piece and the tool are submerged in a dielectric fluid (hydrocarbon or mineral oils).

A suitable gap, known as the spark gap, is maintained between the tool and the work piece surfaces.

The sparks are made to discharge at a high frequency with a suitable source. Since the spark occurs at the spot where the tool and the work piece surfaces are the closest and since the spot changes after each spark (because of the material removal after each spark), the sparks travel all over the surface.

This results in a uniform material removal all over the surface, and finally the work face conforms to the tool surface. Thus, the tool produces the required impression in the work piece.

ELECTRICAL DISCHARGE MACHINING (EDM): Introduction

The spark frequency is normally in the range 200-500,000 Hz, the spark gap being of the order of 0.025-0.05 mm. The peak voltage across the gap is kept in the range 30-250 volts.

MRR up to 300 mm^3 / min can be obtained with this process, the specific power being of the order of 10 W / mm^3 / min.

The efficiency and the accuracy of performance have been found to improve when a forced circulation of the dielectric fluid is provided.

The most commonly used dielectric fluid is kerosene. The tool is generally made of brass or a copper alloy.

ELECTRICAL DISCHARGE MACHINING (EDM)

Mechanism of metal removal

In EDM, material removal is performed by applying a pulsating (ON/OFF) high-frequency current through the electrode to the workpiece.

This removes (erodes) very tiny pieces of material from the workpiece at a controlled rate. The electrode and the workpiece are both immersed in a liquid called dielectric fluid.

The workpiece is normally the anode and the tool is the cathode. A thin gap of about 0.025 mm is maintained between the tool and the workpiece by a servo system.

A suitably shaped tool with feed mechanism is used to get the proper shape and size of the work.

The dielectric used in the system is continuously circulated and filtered.

No grinding or finishing is required after the EDM operation.

It is important to note that EDM manufacturing only works for electrically conductive materials.

ELECTRICAL DISCHARGE MACHINING (EDM)

Mechanism of metal removal

The removal of material from a workpiece using EDM occurs through a series of recurring rapid current discharges between electrodes.

These electrodes are separated using a dielectric fluid.

Then, a voltage is sent through the dielectric fluid.

The basic principle behind this process is the erosion of the material with a controlled electric spark.

There is the application of potential difference across the workpiece and the electrode in pulse form.

As the electrode moves closer to the workpiece, the electric field present in the small gap between them increases. This continues until it reaches breakdown volume.

The electrical discharge causes extreme heating of the material. The heating leads to the melting away of some parts of the material. A steady flow of the dielectric fluid helps to remove the excess material. The liquid also assists in cooling during the machining process.

ELECTRICAL DISCHARGE MACHINING (EDM)

Mechanism of metal removal

Though the surfaces may appear smooth, asperities and irregularities are always present, as indicated.

As a result, the local gap varies, and at a given instant, it is minimum at one point (say, A). When a suitable Voltage is built up across the tool and the work piece (the cathode and the anode, respectively), an electrostatic field of sufficient strength is established, causing cold emission of electrons from the cathode at A.

These liberated electrons accelerate towards the anode. After gaining a sufficient velocity, the electrons collide with the molecules of the dielectric fluid, breaking them into electrons and positive ions. The electrons so produced also accelerate and may ultimately dislodge the other electrons from the dielectric fluid molecules.

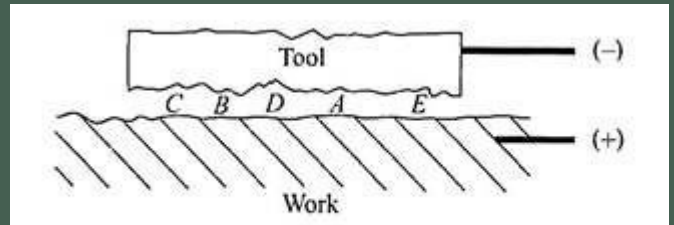

Fig. 6.52 Details of electrode surface characteristics.

ELECTRICAL DISCHARGE MACHINING (EDM)

Mechanism of metal removal

Ultimately, a narrow column of ionized dielectric fluid molecules is established at A connecting the two electrodes (causing an avalanche of electrons, since the conductivity of the ionized column is very large, which is normally seen as a spark).

As a result of this spark, a compression shock wave is generated and a very high temperature is developed on the electrodes (10,000-12,000°C).

This high temperature causes the melting and vaporization of the electrode materials, and the molten metals are evacuated by a mechanical blast, resulting in small craters on both the electrodes at A.

As soon as this happens, the gap between the electrodes at A increases and the next location of the shortest gap is somewhere else (say, B).

ELECTRICAL DISCHARGE MACHINING (EDM)

Mechanism of metal removal

Therefore, when the cycle is repeated, the next spark takes place at B. In this way, the sparks wander all over the electrode surface and, ultimately, the process results in a uniform gap. So, depending on the negative electrode shape, an impression is created on the other electrode.

ELECTRICAL DISCHARGE MACHINING (EDM)

EDM equipment:

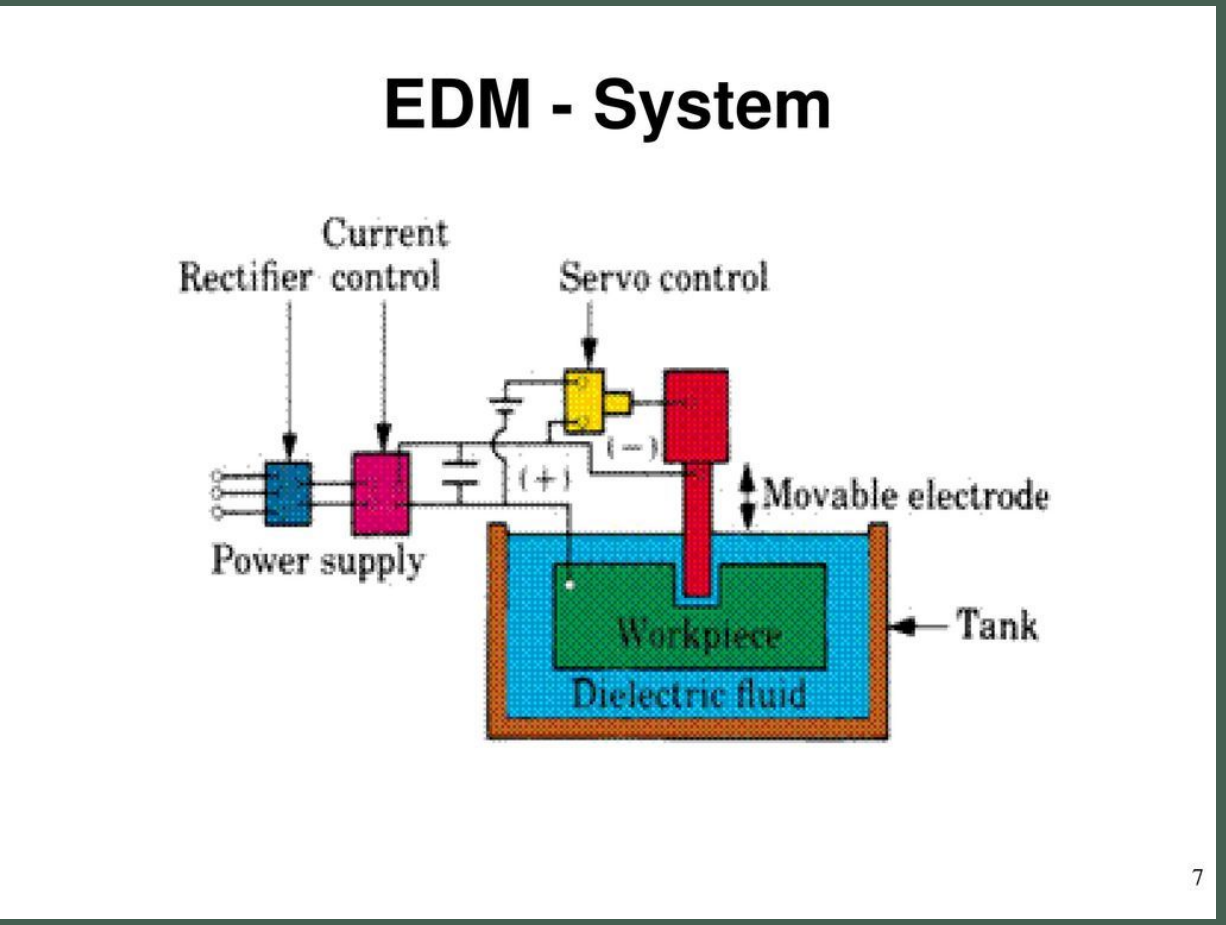

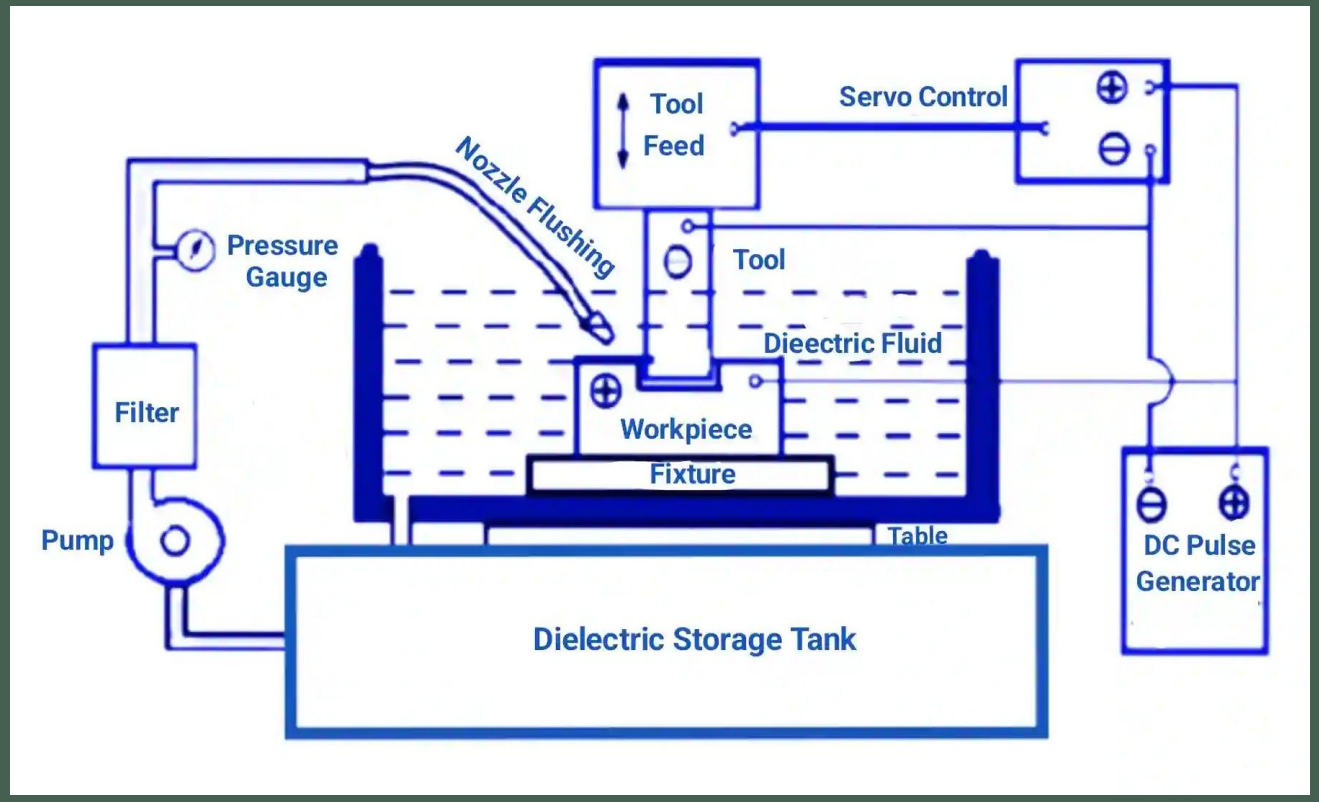

ELECTRICAL DISCHARGE MACHINING (EDM)

EDM equipment:

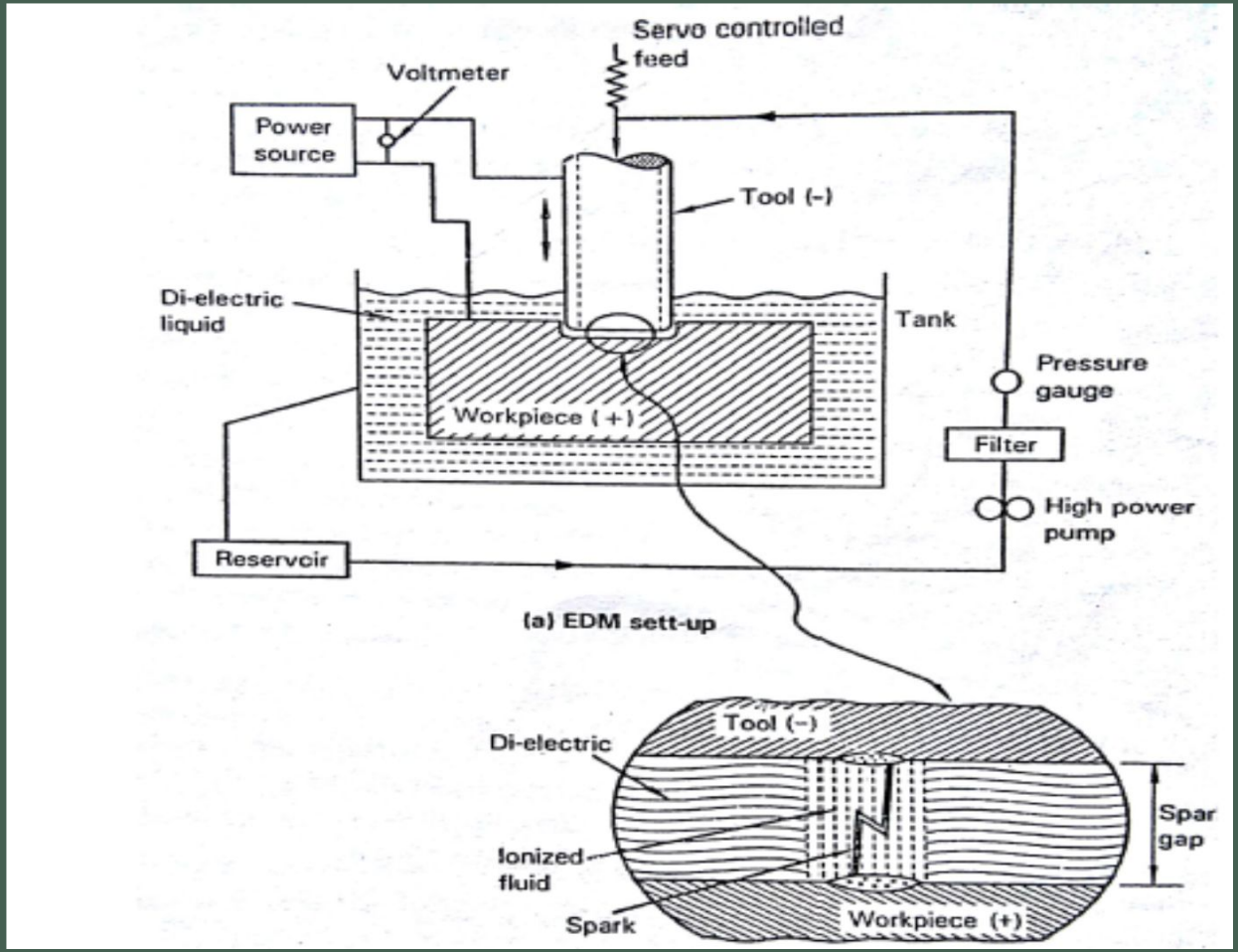

ELECTRICAL DISCHARGE MACHINING (EDM)

EDM equipment: operation

- The main components in EDM:
  - Electric power supply
  - Dielectric medium
  - Work piece & tool
  - Servo control unit.
- The work piece and tool are electrically connected to a DC power supply.
- The current density in the discharge of the channel is of the order of 10000 A/cm^2 and power density is nearly 500 MW/cm^2.
- A gap, known as SPARK GAP in the range, from 0.005 mm to 0.05 mm is maintained between the work piece and the tool.
- Dielectric slurry is forced through this gap at a pressure of 2 kgf/cm^2 or lesser.

ELECTRICAL DISCHARGE MACHINING (EDM)

EDM equipment: operation

- It is a process of metal removal based on the principle of material removal by an interrupted electric spark discharge between the electrode tool and the work piece.
- In EDM, a potential difference is applied between the tool and workpiece.
- Essential - Both tool and work material are to be conductors.
- The tool and work material are immersed in a dielectric medium.
- Generally kerosene or deionised water is used as the dielectric medium.
- A gap is maintained between the tool and the workpiece.
- Depending upon the applied potential difference (50 to 450 V) and the gap between the tool and workpiece, an electric field would be established.
- Generally the tool is connected to the negative terminal (cathode) of the generator and the workpiece is connected to positive terminal (anode).

ELECTRICAL DISCHARGE MACHINING (EDM)

EDM equipment: operation

- As the electric field is established between the tool and the job, the free electrons on the tool are subjected to electrostatic forces.
- If the bonding energy of the electrons is less, electrons would be emitted from the tool.
- Such emission of electrons are called or termed as '**cold emission**'.
- The "cold emitted" electrons are then accelerated towards the job through the dielectric medium.
- As they gain velocity and energy, and start moving towards the job, there would be collisions between the electrons and dielectric molecules.
- Such collision may result in ionization of the dielectric molecule.
- Ionization depends on the ionization energy of the dielectric molecule and the energy of the electron.

ELECTRICAL DISCHARGE MACHINING (EDM)

EDM equipment: operation

- As the electrons get accelerated, more positive ions and electrons would get generated due to collisions.
- This cyclic process would increase the concentration of electrons and ions in the dielectric medium between the tool and the job at the spark gap.
- The concentration would be so high that the matter existing in that channel could be characterised as "plasma".
- The electrical resistance of such plasma channel would be very less.
- Thus all of a sudden, a large number of electrons will flow from tool to job and ions from job to tool.
- This is called avalanche motion of electrons.
- Such movement of electrons and ions can be visually seen as a spark.
- Thus the electrical energy is dissipated as the thermal energy of the spark.

ELECTRICAL DISCHARGE MACHINING (EDM)

EDM equipment: operation

- The high speed electrons then impinge on the job and ions on the tool.
- The kinetic energy of the electrons and ions on impact with the surface of the job and tool respectively would be converted into thermal energy or heat flux.
- Such intense localized heat flux leads to extreme instantaneous confined rise in temperature which would be in excess of 10,000°C.
- Such localized extreme rise in temperature leads to material removal.
- Material removal occurs due to instant vaporization of the material as well as due to melting.
- The molten metal is not removed completely but only partially.

ELECTRICAL DISCHARGE MACHINING (EDM)

EDM equipment: operation

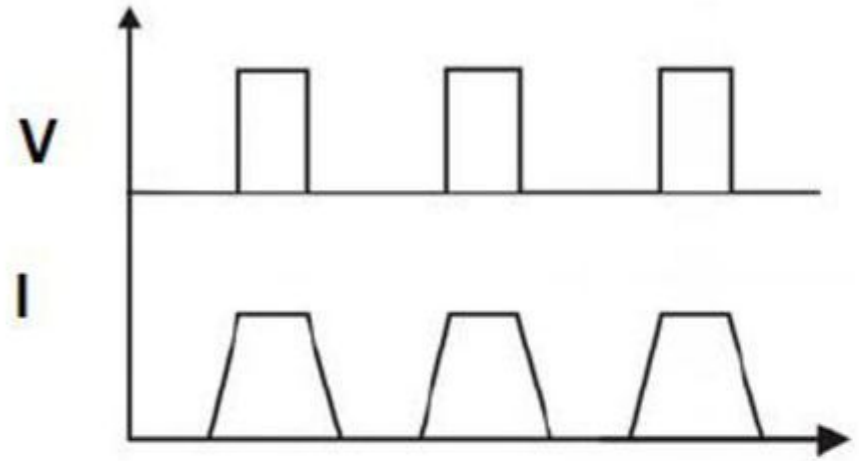

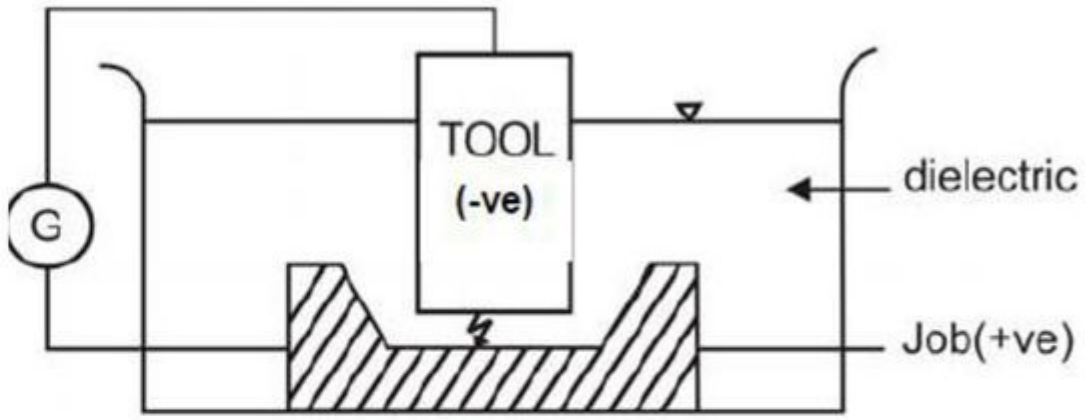

- Upon withdrawal of potential difference, plasma channel collapses.
- This ultimately creates compression shock waves on both the electrode surface.
- Particularly at high spots on work piece surface, which are closest to the tool.
- This evacuates molten material and forms a crater around the site of the spark.
- The whole sequence of operation occurs within a few microseconds.

ELECTRICAL DISCHARGE MACHINING (EDM)

EDM equipment: operation

- Thus to summarise, the material removal in EDM mainly occurs due to formation of shock waves as the plasma channel collapse owing to discontinuation of applied potential difference
- Generally the workpiece is made positive and the tool negative.
- Hence, the electrons strike the job leading to crater formation due to high temperature and melting and material removal.
- Similarly, the positive ions impinge on the tool leading to tool wear.
- In EDM, the generator is used to apply voltage pulses between the tool and job.
- A constant voltage is not applied. Only sparking is desired rather than arcing.
- Arcing leads to localized material removal at a particular point whereas sparks get distributed all over the tool surface leading to uniform material removal.

ELECTRICAL DISCHARGE MACHINING (EDM)

EDM equipment: spark erosion generator (relaxation type)

Resistance-capacitance type (RC type) Or Relaxation generator

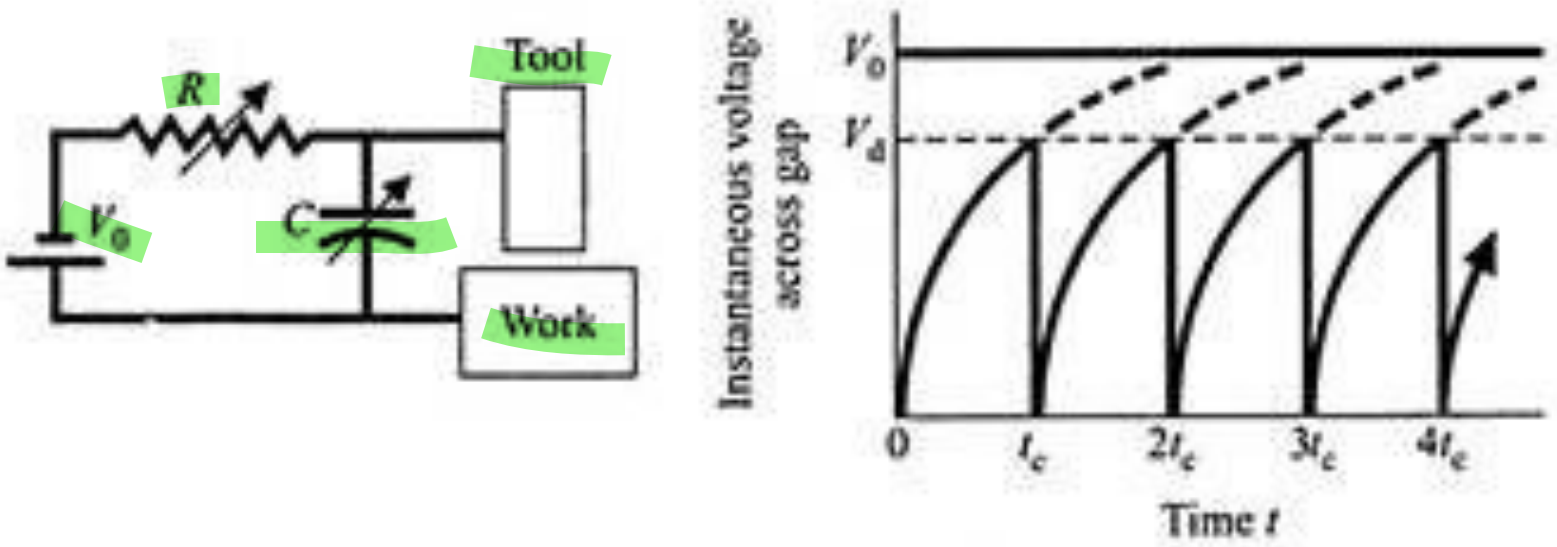

(a) Relaxation circuit (b) Variation of gap voltage

Fig. 6.57 Principle of *RC* relaxation circuit.

ELECTRICAL DISCHARGE MACHINING (EDM)

EDM equipment: spark erosion generator (relaxation type)

Resistance-capacitance type (RC type) Or Relaxation generator

The resistance-capacitance relaxation circuit was used when the electric discharge machines were first developed.

The capacitor C (which can be varied) is charged through a variable resistance R by the DC source of voltage V_0.

If the tool-work gap and the dielectric fluid are such that a spark can take place when the voltage across the gap reaches a value V_d (commonly known as the discharge voltage), a spark will occur, discharging the capacitor completely whenever the voltage across the tool-work gap (V) reaches V_d.

ELECTRICAL DISCHARGE MACHINING (EDM)

EDM equipment: spark erosion generator (relaxation type)

Resistance-capacitance type (RC type) Or Relaxation generator

The capacitor is charged from a DC source. As long as the voltage in the capacitor is not reaching the breakdown voltage of the dielectric medium under the prevailing machining condition, capacitor would continue to charge.

Once the breakdown voltage is reached the capacitor would start discharging and a spark would be established between the tool and workpiece leading to machining.

Such discharging would continue as long as the spark can be sustained. Once the voltage becomes too low to sustain the spark, the charging of the capacitor would continue.

ELECTRICAL DISCHARGE MACHINING (EDM)

EDM equipment: Rotary impulse type generator

The relaxation circuit for spark generation, though simple, has certain disadvantages. Of these, an important disadvantage is that the MRR is not high. For increasing the MRR, an impulse generator is used for spark generation.

The capacitor is charged through the diode during the first half cycle. During the following half cycle, the sum of the voltages generated by the generator and the charged capacitor is applied to the work-tool gap.

ELECTRICAL DISCHARGE MACHINING (EDM)

EDM equipment: Rotary impulse type generator

The operating frequency is the frequency of the sine wave generation which depends on the motor speed.

Though MRR is higher, such a system does not produce a good surface finish.

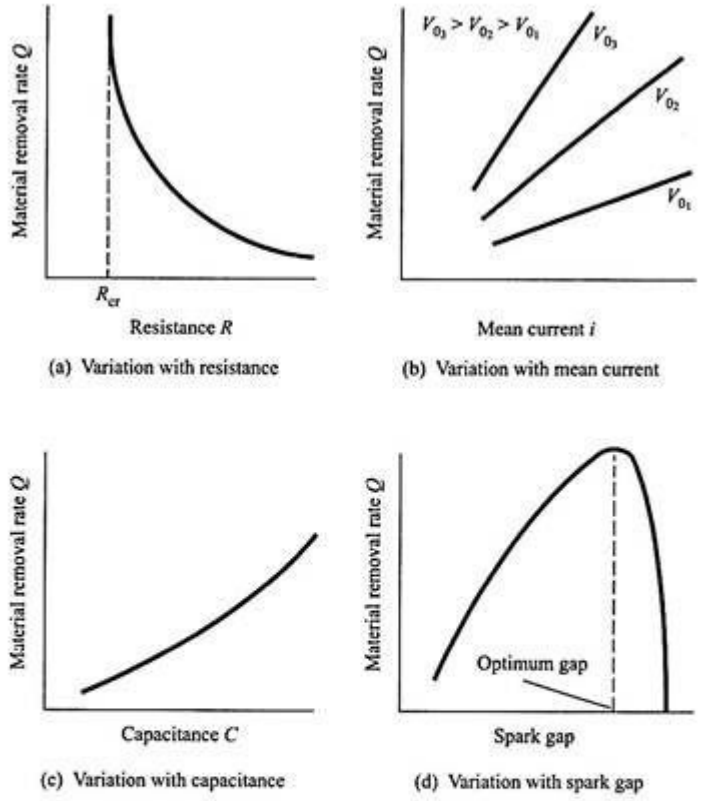

Fig. 6.58 Material removal rate characteristics in EDM using *RC* relaxation circuit.

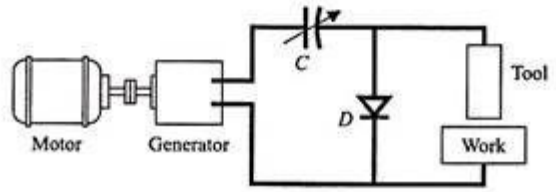

Fig. 6.59 Rotary impulse generator for EDM.

ELECTRICAL DISCHARGE MACHINING (EDM)

EDM equipment: Controlled pulse generator

In the two systems we have discussed, there is no provision for an automatic prevention of the current flow when a short circuit is developed.

To achieve such an automatic control, a vacuum tube (or a transistor) is used as the switching device. This system is known as a controlled pulse circuit.

During sparking, the current which flows through the gap comes from the capacitor.

When the current flows through the gap, the Valve Tube (VT) is biased to cut off and behaves like an infinite resistance. The bias control is done through an Electronic Control (EC). As soon as the current in the gap ceases, the conductivity of the tube increases, allowing the flow of current to charge the capacitor for the next cycle.

ELECTRICAL DISCHARGE MACHINING (EDM)

EDM equipment: Controlled pulse generator

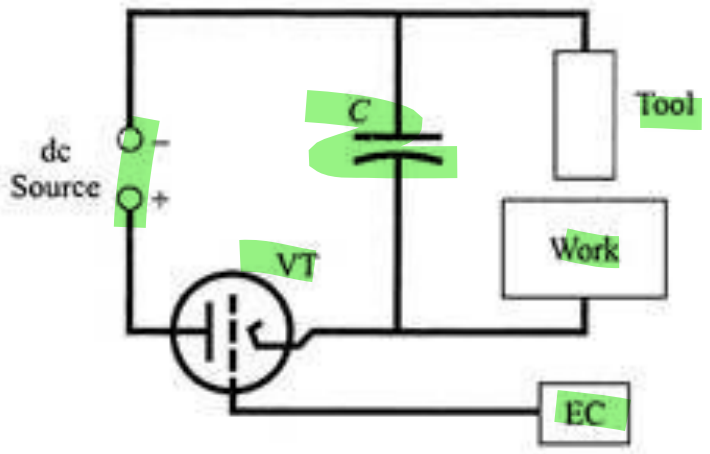

Fig. 6.60 EDM with controlled pulse circuit.

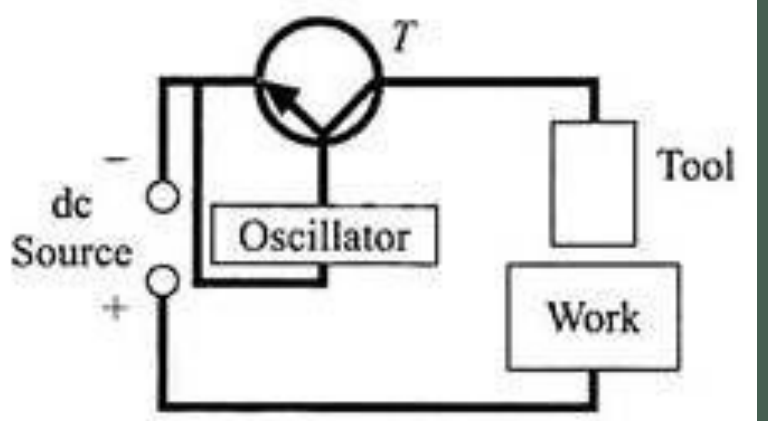

Fig. 6.61 EDM with controlled pulse circuit without capacitor.

ELECTRICAL DISCHARGE MACHINING (EDM)

EDM equipment: Controlled pulse generator

The circuit can be simplified and the operating stability improved if the flow of current is allowed cyclically with an imposed frequency. This can be done by controlling the bias with the help of an oscillator. In this case, the capacitor is not needed.

ELECTRICAL DISCHARGE MACHINING (EDM)

EDM equipment: dielectric medium-its functions & desirable properties

Functions of Dielectric fluid: Essential functions of a dielectric fluid used in EDM process are:

1. Remain electrically non-conductive until the required breakdown voltage is attained, i.e., it should possess high dielectric strength.
2. When once the breakdown voltage is reached it should breakdown electrically instantly.
3. Deionize the spark gap, i.e., quench the spark rapidly after the discharge has occurred.
4. Carry away the metal particles removed from the arc gap.
5. Act as a good cooling medium.

ELECTRICAL DISCHARGE MACHINING (EDM)

EDM equipment: dielectric medium-its functions & desirable properties

- Possesses sufficiently high dielectric strength to remain electrically non-conductive until the required breakdown voltage is reached.
- Optimum viscosity and provide effective cooling.
- It should be non-reactive with the work piece, container or the tool material.
- Non-expensive, easily available and inflammable.
- It should not produce toxic gases or vapors during the operation.
- Possesses high flash point.
- It must be de-ionizing quickly afterwards the spark ejection has taken place.

ELECTRICAL DISCHARGE MACHINING (EDM)

EDM equipment: dielectric medium-its functions & desirable properties

The ordinary water possesses almost all these properties, but since it causes rust ing in the work and the machine, it is not used. Another reason why water is not recommended is as follows. The electrodes are constantly under some potential difference, and due to the good conductivity of water, the ECM process starts distorting the work piece. Also, power is wasted. However, in some cases, deionized water is used.

ELECTRICAL DISCHARGE MACHINING (EDM)

EDM equipment: electrode feed control system

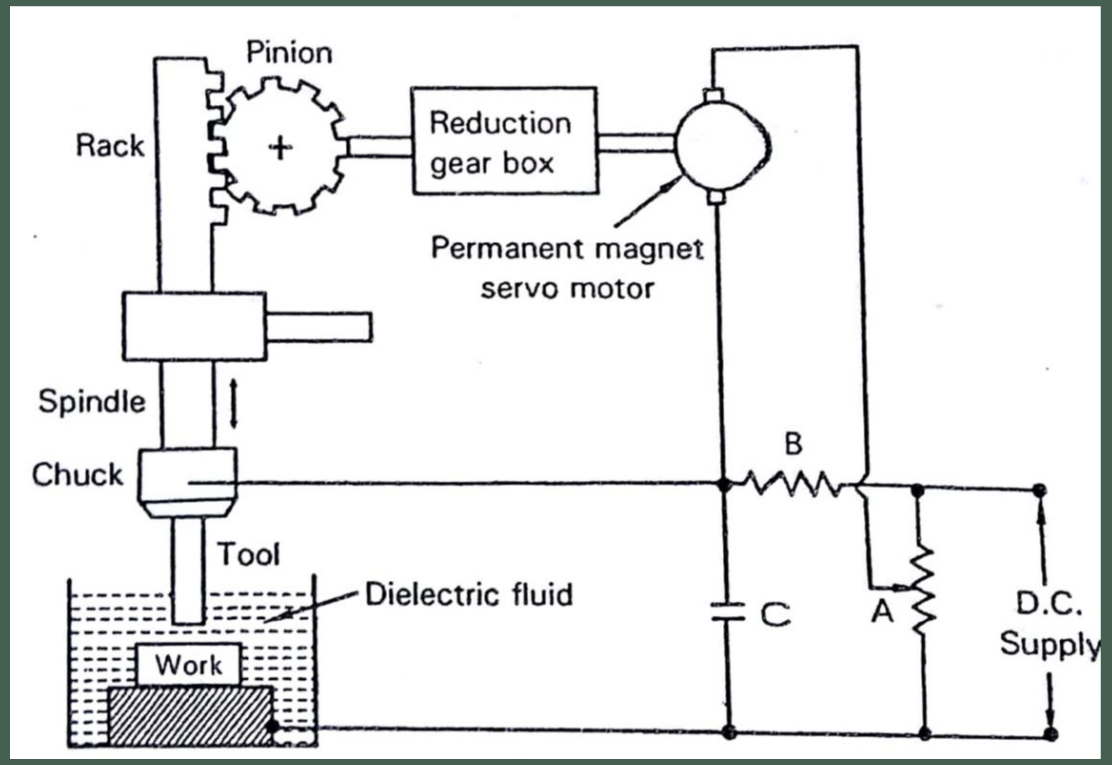

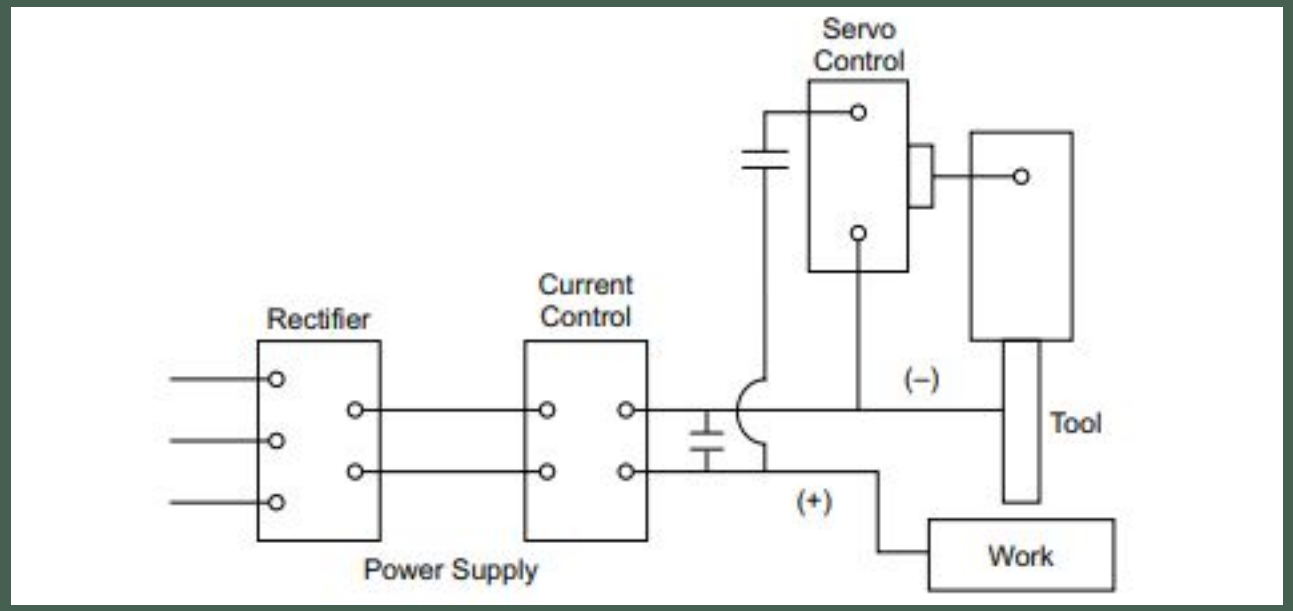

ELECTRICAL DISCHARGE MACHINING (EDM)

EDM equipment: electrode feed control system

Tool feed control: During EDM operation material will be removed from the workpiece and the electrode tool. This will increase the gap between the tool and the work. In order to maintain a constant gap and arcing voltage and to prevent short circuiting the tool must be fed properly with a feed control device. Rapid response of the system is essential with a low inertia drive. Any overshooting will close the arc gap causing short circuiting. Hence, it is required to have rapid reversing feed motion.

Actuation of the control is derived from a signal obtained from an electrical sensor responding to gap voltage or working current or both. The schematic arrangement of servocontrol for tool feed is shown in Fig. 2.6. The gap between the electrode tool and the workpiece is critical. The feed of the tool is controlled by a servomechanism which automatically maintains a constant gap. During operation the capacitor is repeated at rate 50 kHz and 500 kHz with voltage between 50 V-380 V and current from 0.1 A to 500 A (7) (8).

ELECTRICAL DISCHARGE MACHINING (EDM)

EDM equipment: electrode feed control system

The cutting power in EDM depends upon the relative voltage to which the capacitor is charged. If the arc gap is more than the optimum, the consequent reduction in frequency is not compensated for by an increase in energy per spark discharged thereby the power decreases. At shorter gaps the power decreases because the increased frequency is not sufficient to compensate for the reduction in stored energy. During EDM operation it will be difficult to ensure optimum conditions of gap setting as the power is increased because the dielectric medium will be contaminated with metal particle removed from the work and tool, and breakdown occurs at lower voltages.

The sparking and discharge in EDM can be improved by vibrating the tool electrode. If the tool electrode is vibrated, the gap between the tool and work opens and closes regularly and the discharge will not entirely depend on tool gap conditions. Discharge will take place when the tool is closer to the work and deionization of the dielectric happens when the gap is more to prevent discharge. The efficiency of vibrating tool electrode can be enhanced by synchronizing with the resonant frequency of the charging capacitance of the control system. The vibration frequency is of the order of 1000 Hz. The vibration type EDM is well-suited for roughing and metal deposition operations.

ELECTRICAL DISCHARGE MACHINING (EDM)

Flushing types: pressure flushing

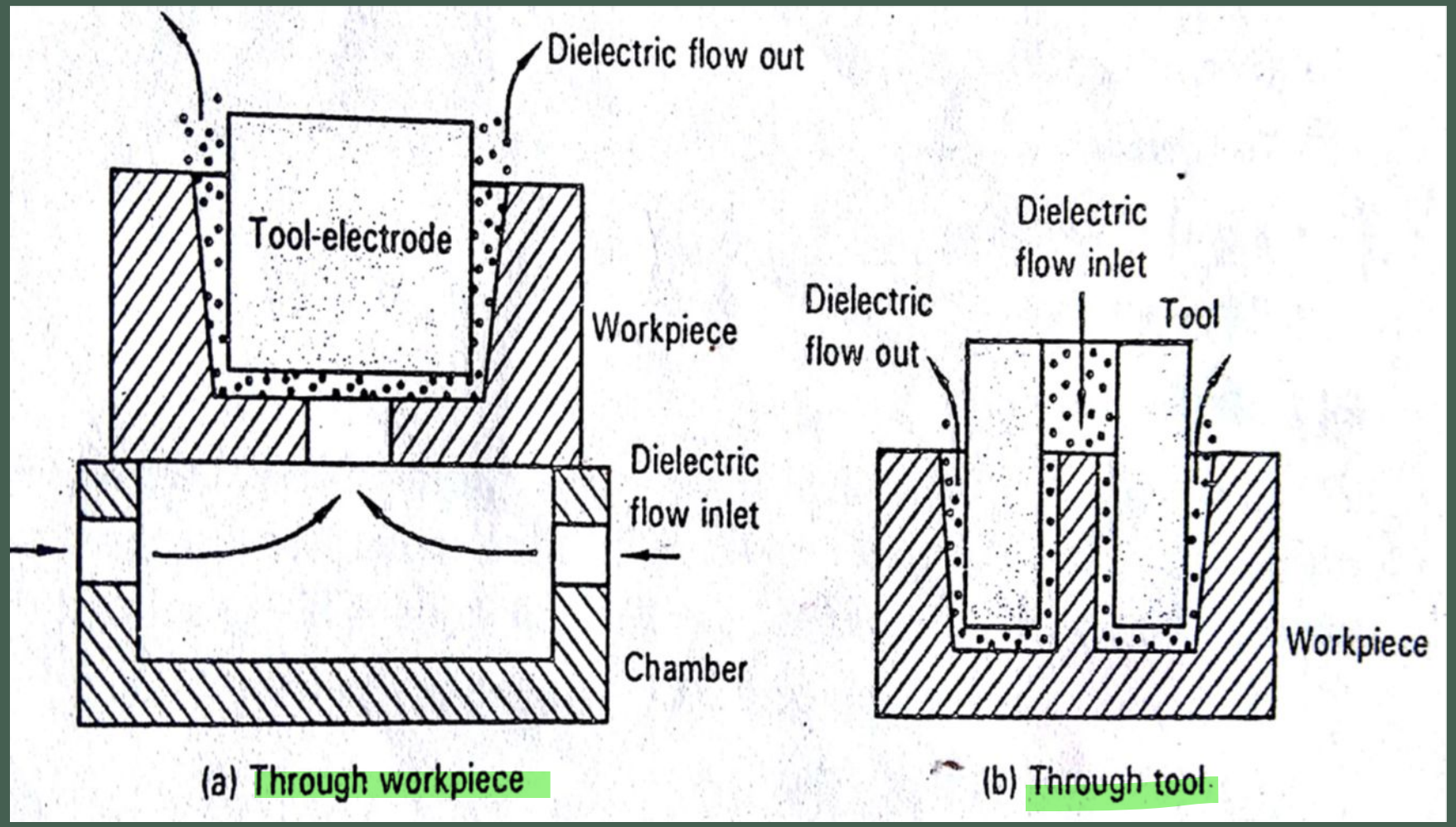

(a) Through workpiece (b) Through tool

ELECTRICAL DISCHARGE MACHINING (EDM)

Flushing types: pressure flushing

It is also called injection flushing. It is most common technique, for flushing.

One main advantage of this method, the operator can see the amount of oil that is being used for flushing.

Pressure flushing are two types : pressure flushing through the electrode and pressure flushing through the work piece.

In case of pressure flushing through the electrode, the fluid is forced through holes in the electrode to pass through the gap between the tool and workpiece.

The fluid under pressure flushes out the solid particles and cools the work and tool electrode.

In the electrode hole, a needle like work material will be left off. This is to be removed later to get a clean machined surface.

Pressure flushing can be done by mounting the workpiece over a flushing pot. This method eliminates the need for holes in the electrode.

ELECTRICAL DISCHARGE MACHINING (EDM)

Flushing types: pressure flushing

With pressure flushing, there is a danger of secondary discharge. Since electricity takes the path of least resistance, secondary discharge machining can occur as the eroded particles pass between the walls of the electrode and the workpiece.

This secondary discharge can cause side wall tapering. Suction flushing can prevent side wall tapering.

ELECTRICAL DISCHARGE MACHINING (EDM)

Flushing types: suction flushing

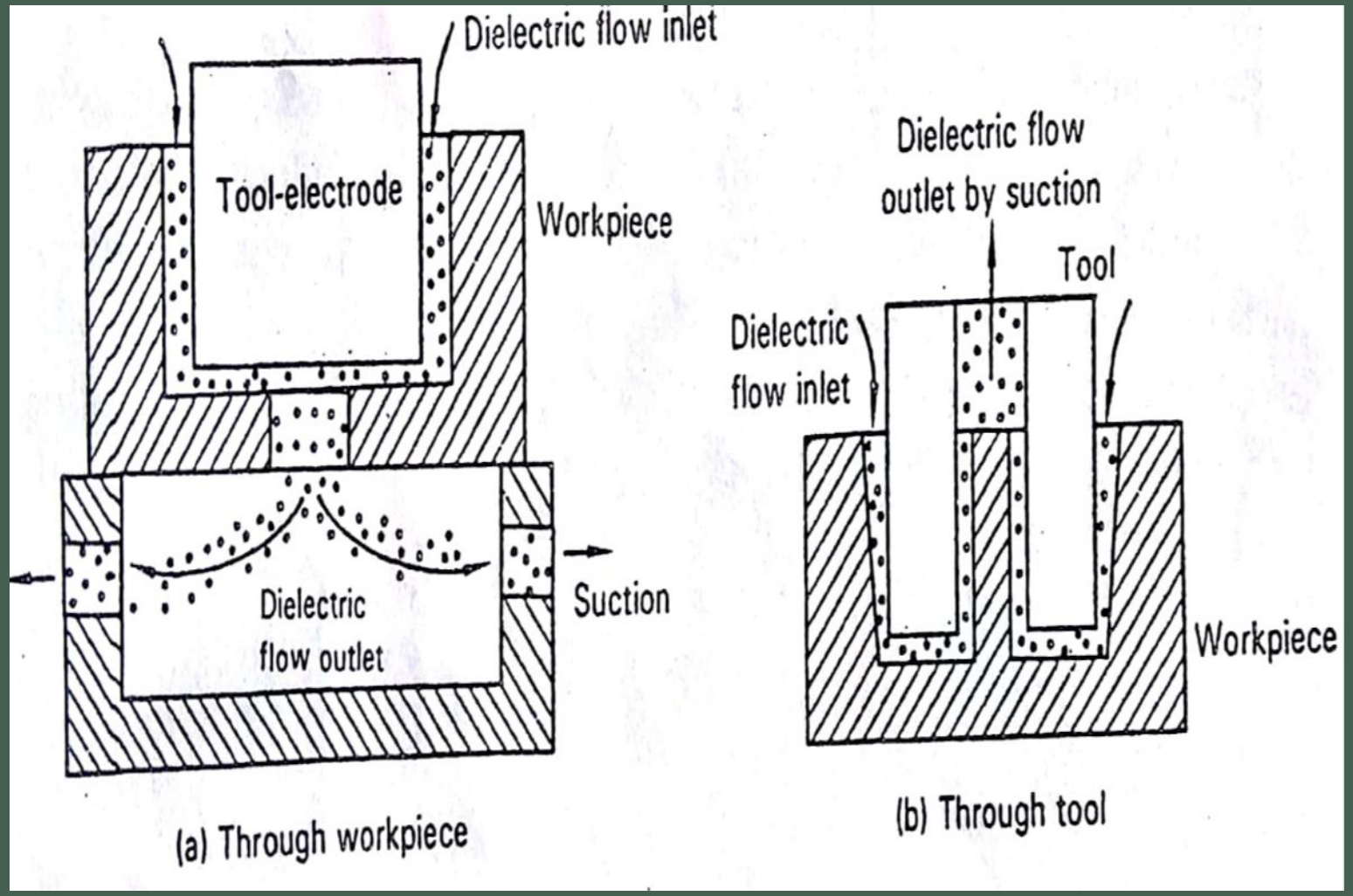

ELECTRICAL DISCHARGE MACHINING (EDM)

Flushing types: suction flushing

Suction flushing or vacuum flushing can be used to remove eroded gap particles. Suction flushing can be done through the electrode or through the workpiece.

It minimizes secondary discharge and wall tapering. It sucks oil from the worktank.

A disadvantage of suction flushing is that there is no visible oil stream. Also, gauge readings are not always reliable regarding the actual flushing pressure in the gap.

A danger of suction flushing is that gases may not be sufficiently removed, causing explosion of the electrode.

In addition, the created vacuum can be so great that the electrode can be pulled from its mount, or the workpiece may be pulled from the magnetic chuck.

ELECTRICAL DISCHARGE MACHINING (EDM)

Flushing types: side flushing

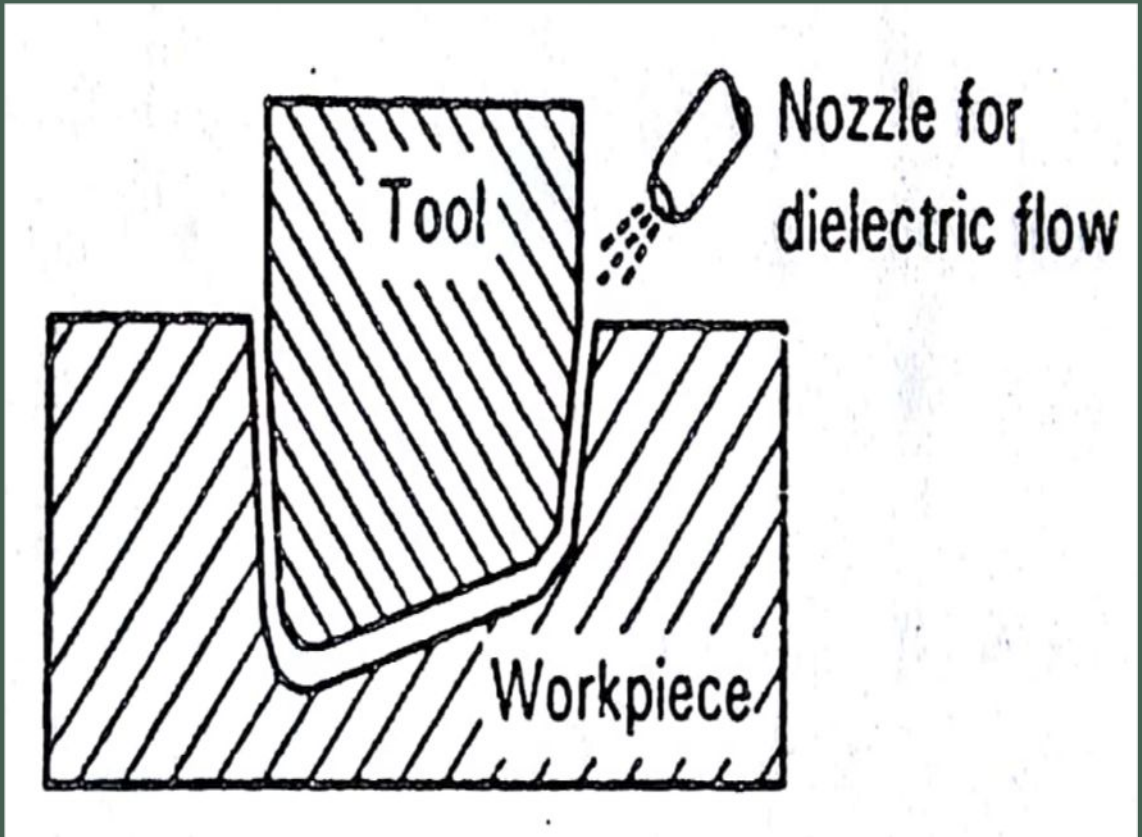

ELECTRICAL DISCHARGE MACHINING (EDM)

Flushing types: side flushing

Also known as jet flushing.

When flushing holes cannot be drilled either in the workpiece or the tool this type of flushing is employed.

For the entire working area to be evenly flushed, special precautions have to be taken for the pumping of dielectric,.

ELECTRICAL DISCHARGE MACHINING (EDM)

Flushing types: pulsed flushing

Pulsed flushing in Electro Discharge Machining (EDM) is a technique used to improve the machining process by periodically applying a flushing medium, typically dielectric fluid, to the machining gap. The purpose of pulsed flushing is to effectively remove debris and maintain a stable and efficient machining environment.

Flushing Medium Application: Pulsed flushing involves the controlled application of a flushing medium to the machining gap between the electrode and the workpiece. The flushing medium is typically dielectric fluid, which serves multiple purposes, including cooling the workpiece and electrode, flushing away debris, and preventing arcing.

Intermittent Flow: Instead of a continuous flow, the flushing medium is applied in a pulsed manner. This means that the flow of dielectric fluid is turned on and off at specific intervals or based on predetermined parameters. The pulses of the flushing medium are timed to coincide with the machining process for optimal effectiveness.

ELECTRICAL DISCHARGE MACHINING (EDM)

Flushing types: pulsed flushing

Stable Spark Erosion: The intermittent application of the flushing medium helps in promoting stable spark erosion. The dielectric fluid aids in extinguishing the electrical sparks after their occurrence. By preventing the formation of unstable arcs and excessive localized heating, pulsed flushing ensures a consistent and controlled material removal process.

Surface Finish Enhancement: Pulsed flushing contributes to achieving a better surface finish in EDM. By effectively removing debris and maintaining a stable machining environment, the process can produce smoother surfaces with reduced surface roughness. This is particularly important for applications that require high-quality surface finishes.

ELECTRICAL DISCHARGE MACHINING (EDM)

EDM process parameters: Spark frequency

Frequency is the number of cycles produced across the gap in one second. The higher the frequency, the finer the surface finish that can be obtained. As the number of cycles per second increases, the length of the on-time decreases.

Short on-times remove very little metal and create smaller craters. This produces a smoother finish with less thermal damage to the workpiece.

Low frequencies are generally used for roughing operations. Longer on-times create craters that are deeper and wider, thus removing more metal. It also allows more heat to sink into the workpiece which means the recast layer will be thicker and the heat affected zone will be deeper.

ELECTRICAL DISCHARGE MACHINING (EDM)

EDM process parameters: Spark frequency

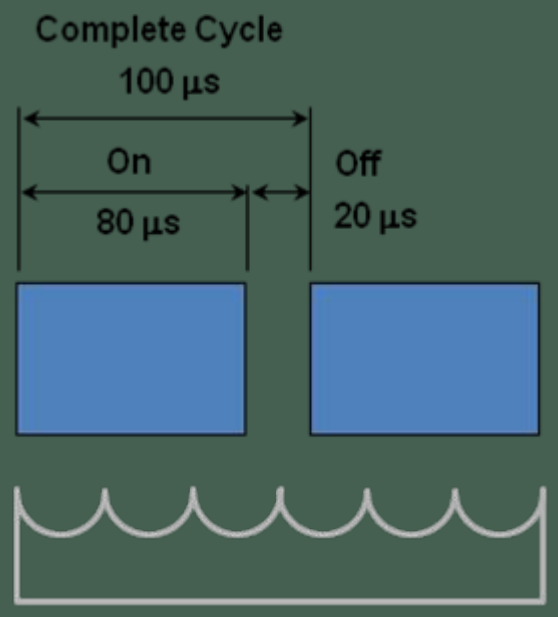

Low Frequency/Roughing

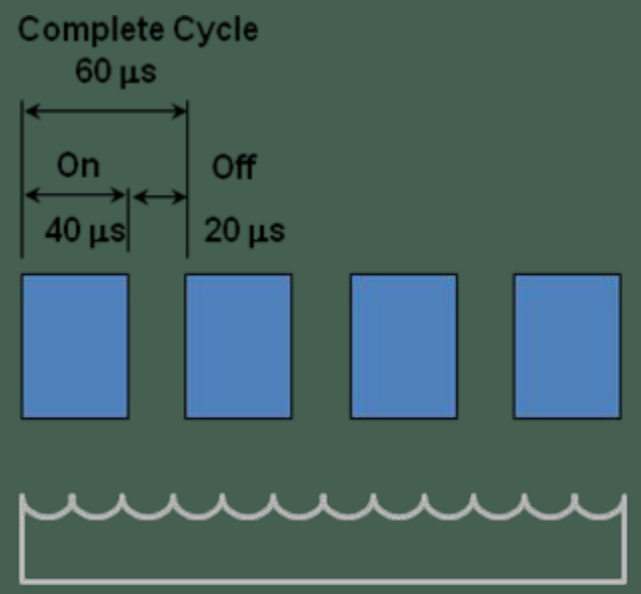

Moderate Frequency/Semi-Roughing

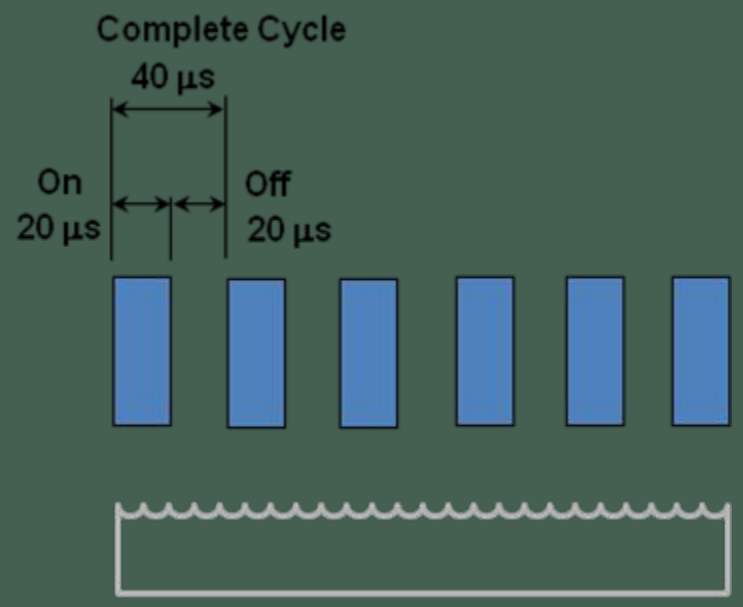

High Frequency/Finishing

ELECTRICAL DISCHARGE MACHINING (EDM)

EDM process parameters: Current & spark gap

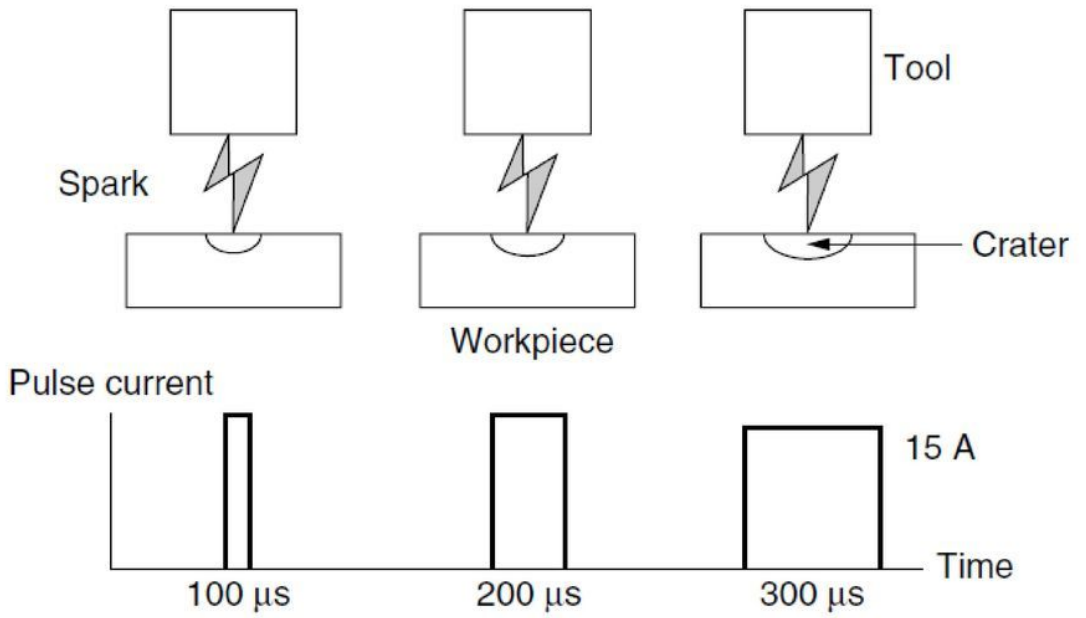

Effect of pulse on-time (energy) on MRR & surface roughness.

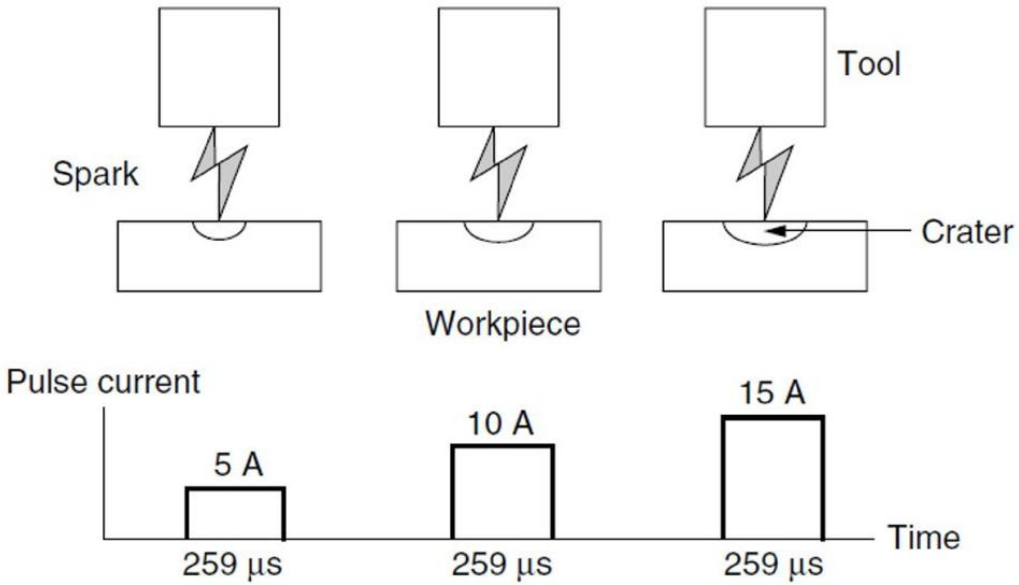

Effect of pulse current (energy) on MRR & surface roughness.

ELECTRICAL DISCHARGE MACHINING (EDM)

MRR

EDM – Material Removal Rate

- In EDM, the metal is removed from both workpiece and tool electrode.
- MRR depends not only on the workpiece material but on the material of the tool electrode and the machining variables such as pulse conditions, electrode polarity, and the machining medium.
- In this regard a material of low melting point has a high metal removal rate and hence a rougher surface.
- Typical removal rates range from 0.1 to 400 mm^3 /min.
- MRR or volumetric removal rate (VRR), in mm3/min, was described by Kalpakjian (1997):

$$VRR = (4 \times 10^4) i T_w^{-1.23}$$

where	I	-	EDM current (A)
	T_w	-	Melting point of the workpiece (°C).

ELECTRICAL DISCHARGE MACHINING (EDM)

Surface finish

EDM – Surface Integrity

- Surface consists of a multitude of overlapping craters that are formed by the action of microsecond-duration spark discharges.
- Crater size depends on
  - physical and mechanical properties of the material
  - composition of the machining medium
  - discharge energy and duration.
- Integral effect of thousands of discharges per second leads to machining with a specified accuracy and surface finish.

ELECTRICAL DISCHARGE MACHINING (EDM)

Surface finish

EDM – Surface Integrity

- Average roughness can be expressed in terms of pulse current i_p (A) and pulse duration t_p (μs) by

$$R_a = 0.0225\ i_p^{0.29}\ t_p^{0.38}$$

- Surface roughness increases linearly with an increase in MRR.
- Jeswani (1978) - Graphite electrodes produce rougher surfaces than metal ones.
- Kuneida and Furuoya (1991) claimed that the introduction of oxygen into discharge gap provides extra power by the reaction of oxygen.
- This in turn increased workpiece melting and created greater expulsive forces that increased MRR and surface roughness.
- Choice of correct dielectric flow has a significant effect in reducing surface roughness by 50 %, increasing the machining rate, and lowering the thermal effects in the workpiece surface.
- Dielectrics having low viscosity are recommended for smooth surfaces.

ELECTRICAL DISCHARGE MACHINING (EDM)

EDM process parameters: Heat Affected Zone.

MICROSCOPIC STUDY OF EDMed COMPONENTS REVEALS THE PRESENCE OF 3 KINDS OF LAYERS

- ✓ RECAST Layer
- ✓ HEAT AFFECTED ZONE (HAZ)
- ✓ CONVERTED Layer

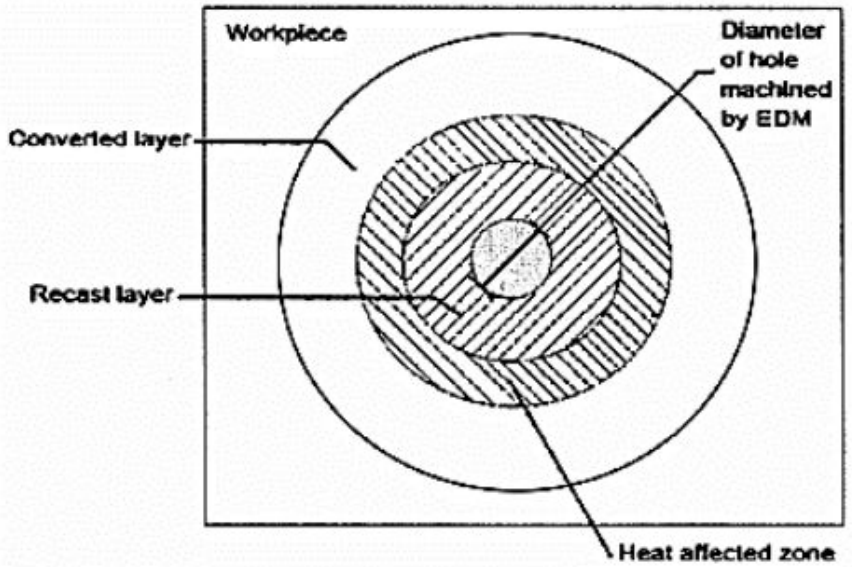

ELECTRICAL DISCHARGE MACHINING (EDM)

EDM process parameters: Heat Affected Zone

Recast layer

If molten material from the workpiece is not flushed out quickly, it will resolidify and harden due to the cooling effect of the dielectric and gets adhered to the machined surface. This thin layer of about 2.5-50 µm is formed and is called re-cast layer.

HAZ

Beneath the recast layer, a HAZ is formed due to rapid heating and quenching cycles during EDM.

Layer is approximately 25 µm thick.

Heating-cooling cycle and diffused material during machining are the responsible reasons for the presence of this zone.

Thermal residual stresses, grain boundary weaknesses, and grain boundary cracks are some of the characteristics of this zone.

Conversion zone (or converted layer) is identified below the HAZ and is characterized by a change in grain structure from the original structure

ELECTRICAL DISCHARGE MACHINING (EDM)

EDM characteristics

EDM – Characteristics

- Can be used to machine any work material if it is electrically conductive.
- MRR depends on thermal properties (job) rather than its strength, hardness etc.
- The volume of the material removed per spark discharge is typically in the range of (1/1,000,000) to (1/10,000) mm^3.
- In EDM, geometry of tool - positive impression of hole or geometric feature.
- Tool wear once again depends on the thermal properties of tool material.
- Local temperature rise is rather high, but there is not enough heat diffusion (very small pulse on time) and thus HAZ is limited to 2 – 4 μm.
- Rapid heating and cooling leads to surface hardening which may be desirable in some applications.
- Tolerance value of ± 0.05 mm could be easily achieved by EDM.
- Best surface finish that can be economically achieved on steel is 0.40 μm.

ELECTRICAL DISCHARGE MACHINING (EDM)

Advantages

- Extremely hard material can be easily machined with close tolerances.
- Unlike some traditional machining methods, EDM produces a minimal heat-affected zone (HAZ) during the process. The controlled electrical discharges cause localized melting and vaporization, resulting in negligible thermal effects on the surrounding material.
- Complex shapes that would be difficult to produce with conventional cutting tools.
- EDM can be used on a wide range of conductive materials, including metals and some ceramics. This versatility makes it suitable for various industries, from tool and die making to medical device manufacturing.
- Thin and small workpiece can be easily machined.
- There is no direct contact between tool and work piece. Therefore delicate sections and weak materials can be machined without any distortion.
- Since EDM operates by utilizing electrical discharges, it does not subject the workpiece to significant mechanical stresses.
- A good surface finish can be obtained.

ELECTRICAL DISCHARGE MACHINING (EDM)

Limitations

Both the material the tool and work piece material has to be electrical conductivity property.

Slow MRR compared to conventional machining.

High Power consumption.

Overcut is formed due to side spark.

Tool wear occurs during machining, hence additional cost for the tool.

ELECTRICAL DISCHARGE MACHINING (EDM)

Applications

- Drilling of micro-holes, thread cutting, helical profile milling, rotary forming, and curved hole drilling.
- Delicate work piece like copper parts can be produced by EDM.
- Can be applied to all electrically conducting metals and alloys irrespective of their melting points, hardness, toughness, or brittleness.
- Other applications: deep, small-dia holes using tungsten wire as tool, narrow slots, cooling holes in super alloy turbine blades, and various intricate shapes.
- EDM can be economically employed for extremely hardened work piece.
- Since there is no mechanical stress present (no physical contact), fragile and slender work places can be machined without distortion.
- Hard and corrosion resistant surfaces, essentially needed for die making, can be developed.

ELECTRICAL DISCHARGE MACHINING (EDM)

Applications

- Uses a tubular tool electrode where the dielectric is flushed.
- When solid rods are used; dielectric is fed to the machining zone by either suction or injection through pre-drilled holes.
- Irregular, tapered, curved, as well as inclined holes can be produced by EDM.
- Creating cooling channels in turbine blades made of hard alloys is a typical application of EDM drilling.
- Use of NC system enabled large numbers of holes to be accurately located.

ELECTRICAL DISCHARGE MACHINING (EDM)

Electrical discharge grinding

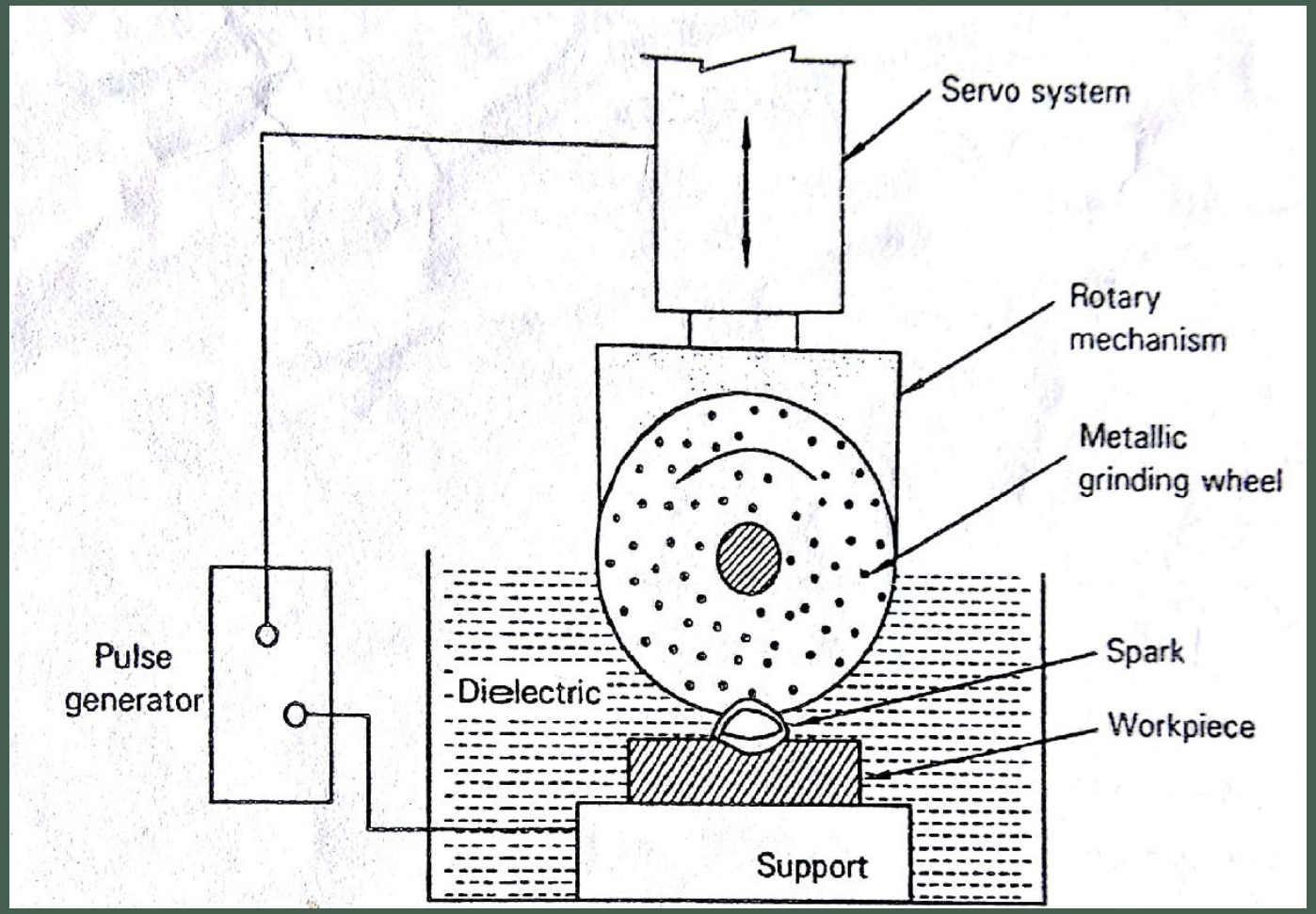

ELECTRICAL DISCHARGE MACHINING (EDM)

Electrical discharge grinding

Tool is in the form of a rotating wheel and it is made from conductive materials like brass, copper, graphite and steel.

The grinding wheel is made to rotate about a horizontal axis and is separated from the workpiece by a dielectric fluid.

The gap between the wheel and the workpiece is maintained by servo control mechanism.

When the DC power is applied, insulation properties of the dielectric fluid are momentarily broken down, thereby allowing a small spark to jump through the gap between the tool and the workpiece.

The thermal energy of the spark melts a small portion of the workpiece at the point where the spark makes contact with the workpiece.

Rotating motion of the wheel causes the molten metal to ejected from the workpiece leaving a small crater, this action is repeated in thousands of times in one seconds resulting in metal removal from the workpiece.

ELECTRICAL DISCHARGE MACHINING (EDM)

Traveling wire EDM

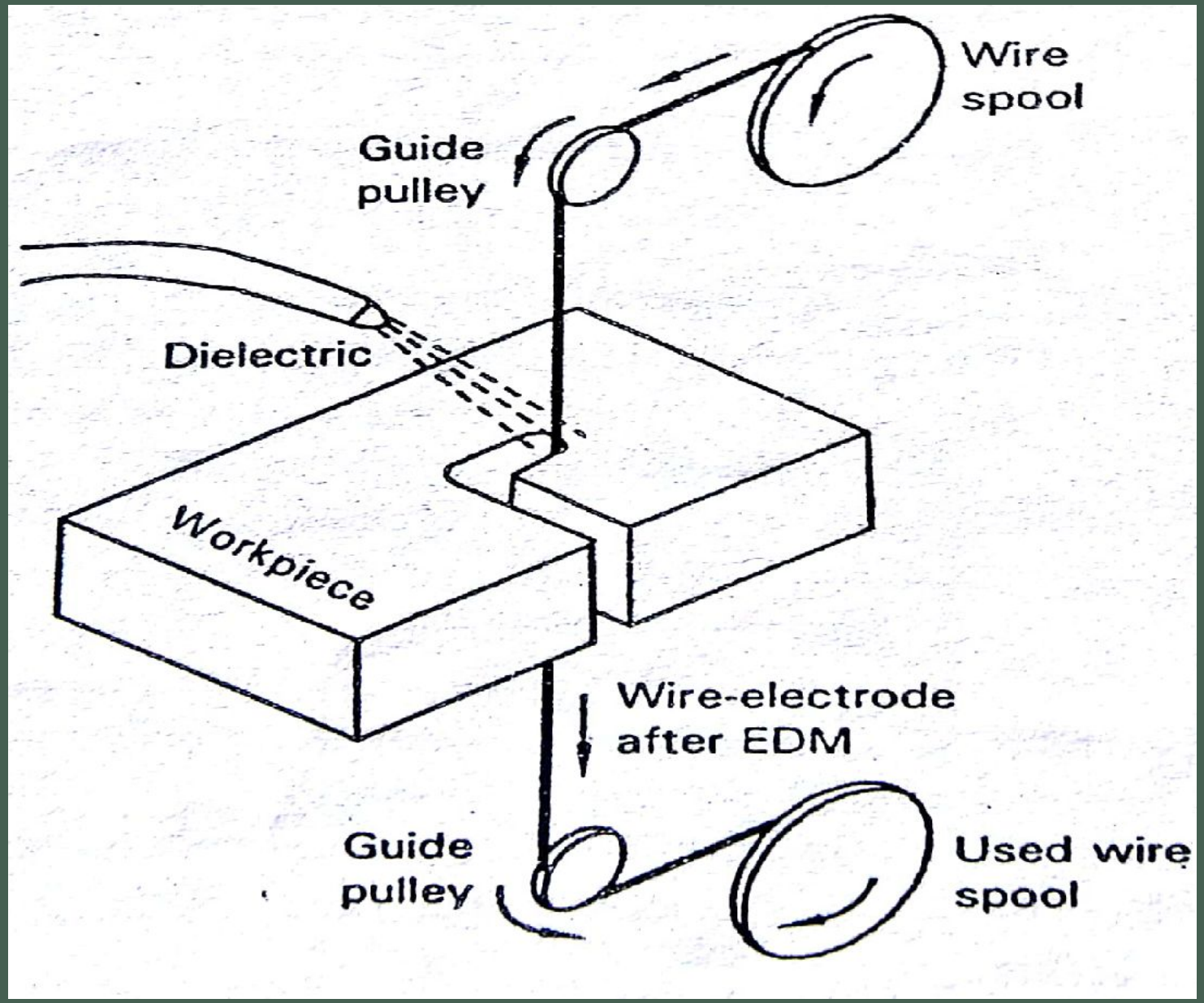

ELECTRICAL DISCHARGE MACHINING (EDM)

Traveling wire EDM

Wire cut EDM makes use of a travelling wire act as a tool (electrode) made from copper and brass, Typical diameter of the wire ranges from 0.05-0.3mm.

The wire unwinds from a spool, feeds through the workpiece and is taken up on a second spool with a constant wire tension and it is controlled by computer numerically controlled CNC system.

Deionized water is used as the dielectric fluid and is injected through nozzles in to the spark gap.

Gap between the travelling wire and workpiece is about 0.025 to 0.05 mm.

When the sufficient voltage is applied, the dielectric fluid ionizes resulting in a controlled spark discharge between the tool and the workpiece.

The spark precisely erodes a small portion of the workpiece causing it to melt and vaporize.

PLASMA ARC MACHINING (PAM): Introduction

PLASMA ARC MACHINING (PAM)

Non-thermal generation of plasma

PLASMA ARC MACHINING (PAM)

Equipment and mechanism of metal removal

PLASMA ARC MACHINING (PAM)

Plasma torch

PLASMA ARC MACHINING (PAM)

Process parameters

PLASMA ARC MACHINING (PAM)

Process characteristics

PLASMA ARC MACHINING (PAM)

Safety precautions

PLASMA ARC MACHINING (PAM)

Applications

PLASMA ARC MACHINING (PAM)

Advantages

PLASMA ARC MACHINING (PAM)

Limitations