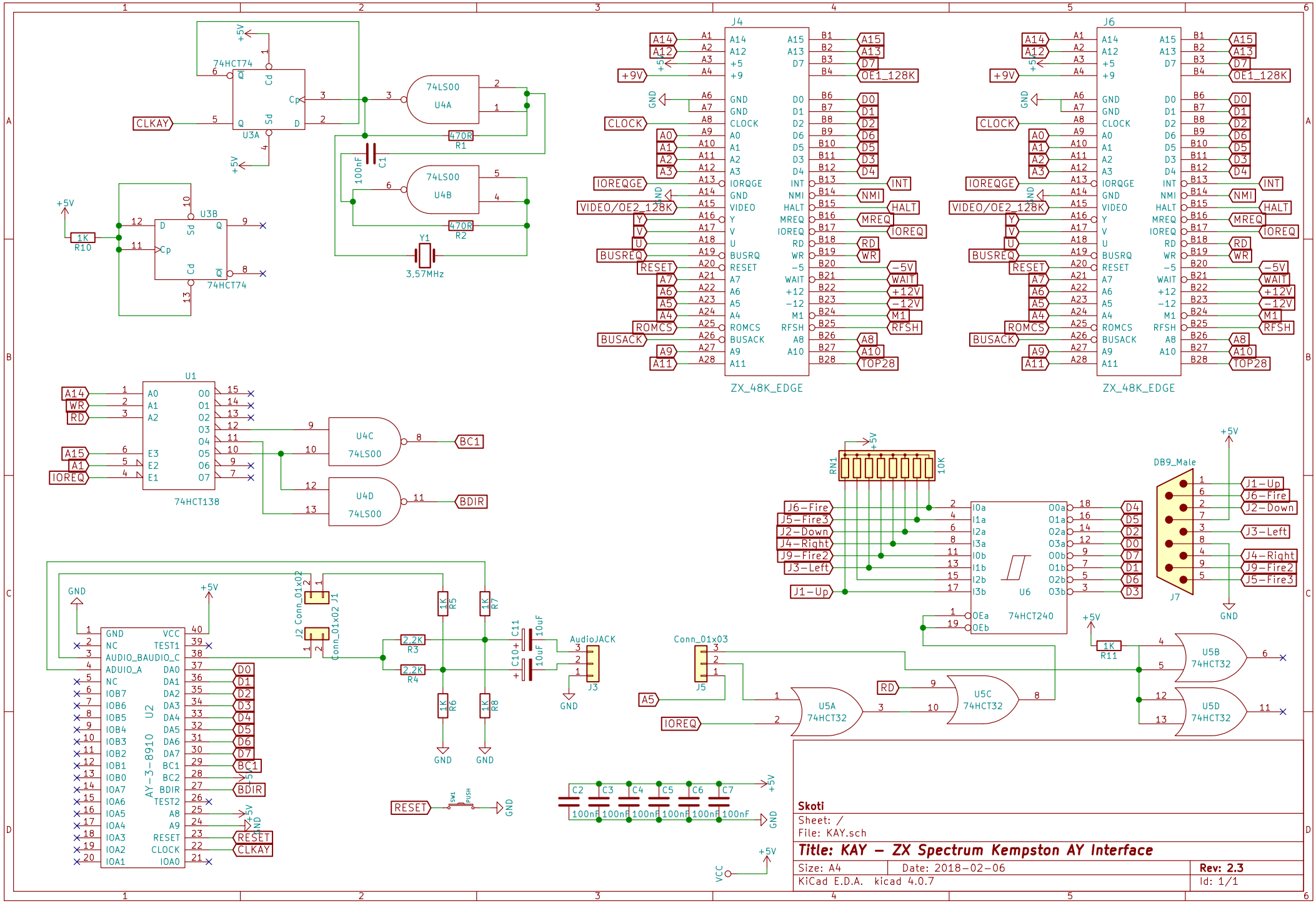
74HCT74
U3A
CLKAY
74LS00
U4A
U4B
470R
R1
R2
100nF
C1
Y1
3,57MHz
U3B
1K
R10
J4
J6
ZX_48K_EDGE
U1
74HCT138
U4C
U4D
BC1
BDIR
RN1
10K
DB9_Male
J7
J1-Up
J6-Fire
J2-Down
J3-Left
J4-Right
J9-Fire2
J5-Fire3
U6
74HCT240
J2 Conn_01x02
J1 Conn_01x02
2,2K
R3
R4
R5
R6
R7
R8
C11
10uF
AudioJACK
J3
Conn_01x03
J5
U5A
U5B
U5C
U5D
74HCT32
R11
U2
AY-3-8910
RESET
SW1
PUSH
C2
C3
C4
C5
C6
C7
100nF
VCC
GND
+5V
Skoti
Sheet: /
File: KAY.sch
Title: KAY – ZX Spectrum Kempston AY Interface
Size: A4
Date: 2018-02-06
Rev: 2.3
KiCad E.D.A. kicad 4.0.7
Id: 1/1