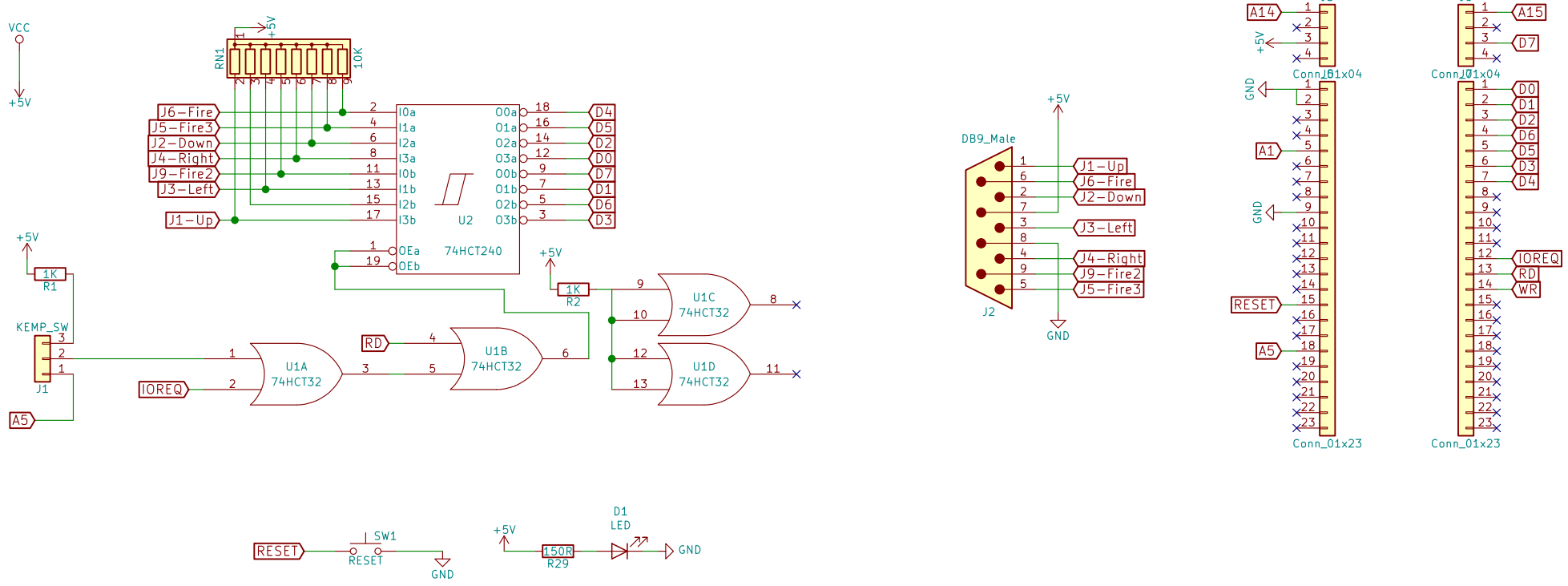

Sheet: ay

File: ay.sch

Kempston + TurboSound Interface

Skoti

Sheet: /

File: kts.sch

Title: KTS

Size: A4	Date: 2019-09-29	**Rev: 2.0**
KiCad E.D.A. kicad (5.1.4)-1		Id: 1/2

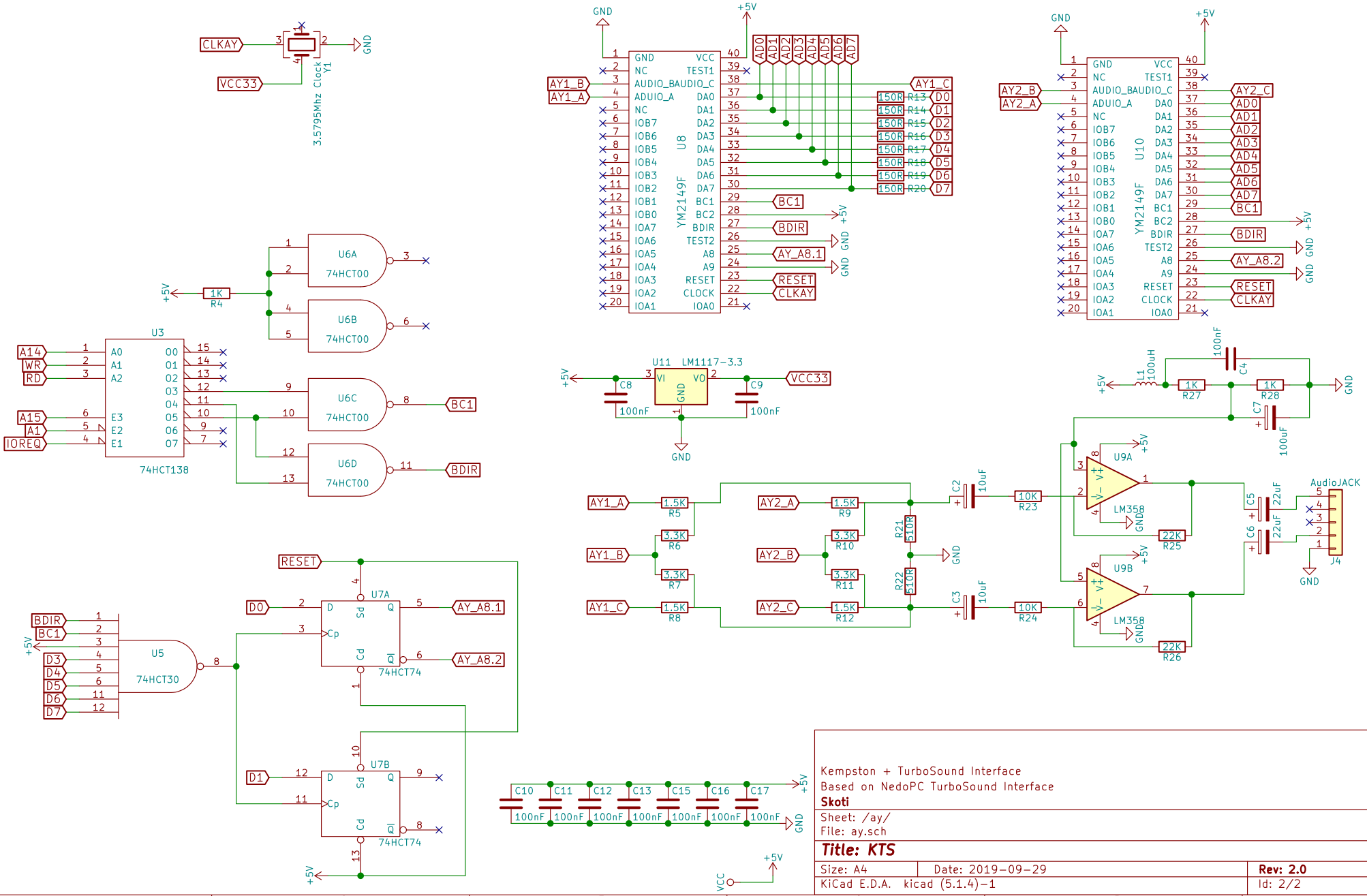

Kempston + TurboSound Interface
Based on NedoPC TurboSound Interface
Skoti

Sheet: /ay/
File: ay.sch

Title: KTS

Size: A4	Date: 2019-09-29	**Rev: 2.0**
KiCad E.D.A. kicad (5.1.4)-1		Id: 2/2