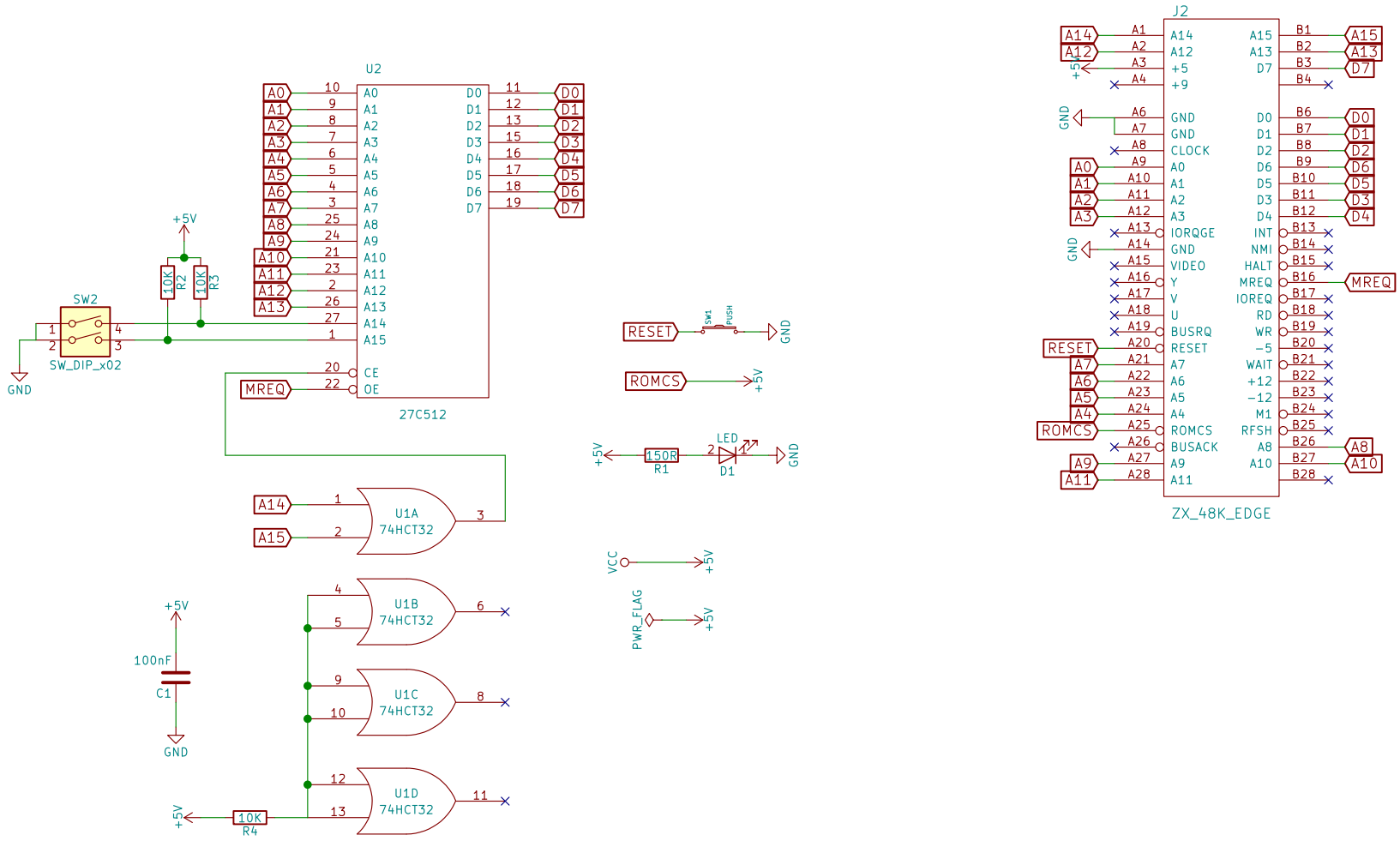

Skoti

Sheet: /

File: zx_ext_eprom_512.sch

Title: ZX Spectrum External ROM

Size: A4	Date: 2018-05-22	**Rev: 1.0**
KiCad E.D.A. kicad 4.0.7		Id: 1/1