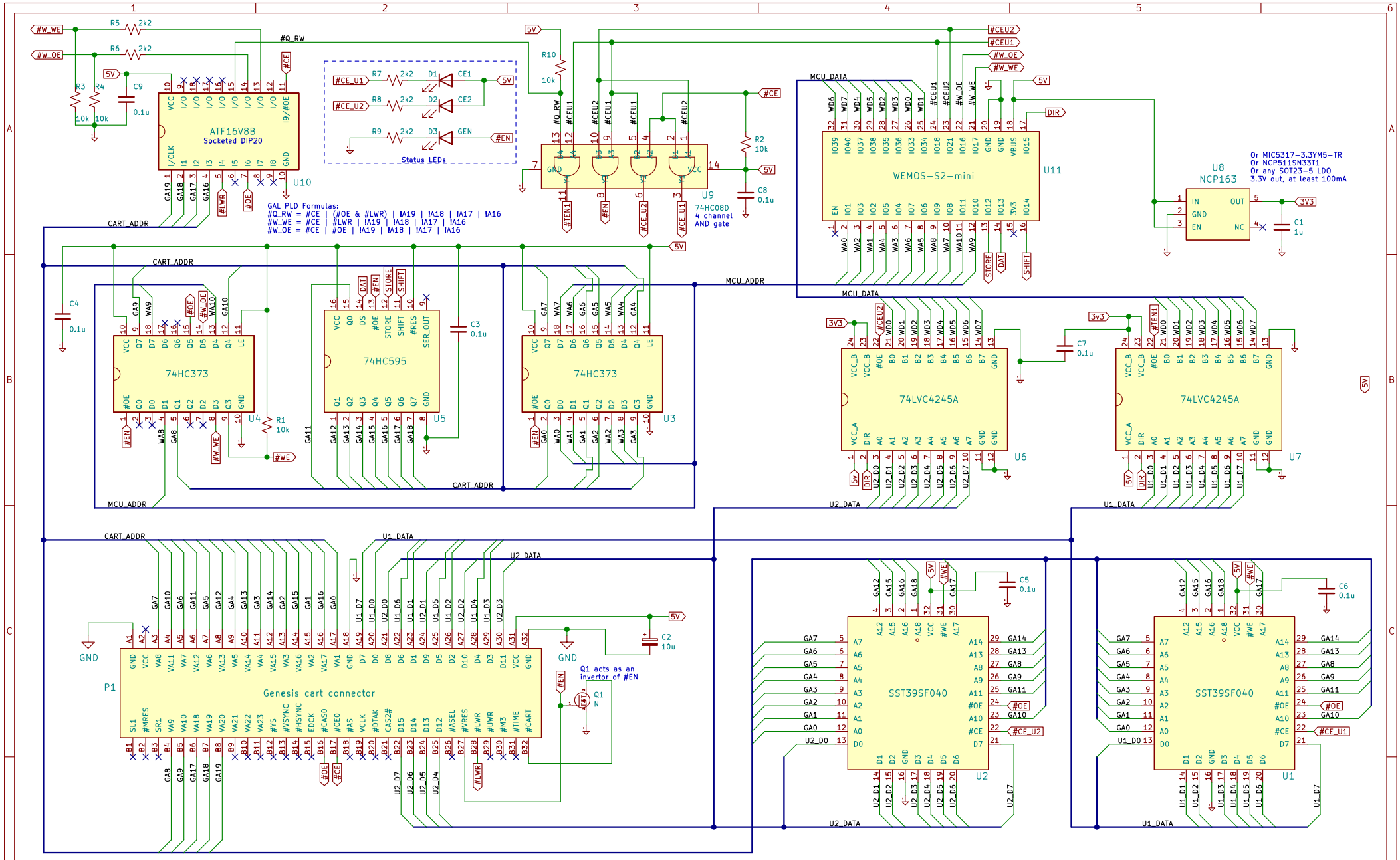

Sheet: /
File: genesis_wifi_cart_r1.kicad_sch

Title: Genesis WiFi Cart 8 Mbit

Date:

Rev: R3

Id: 1/1