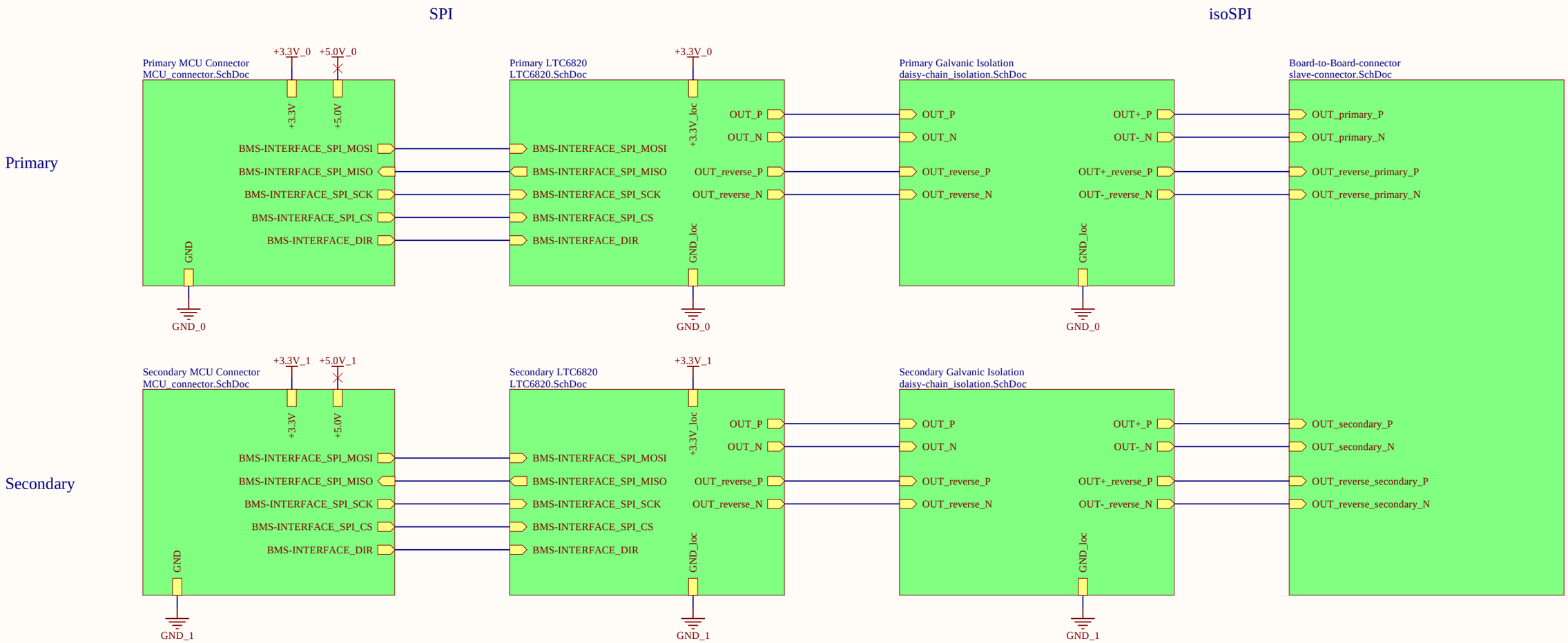

www.foxbms.org

developed by:

Fraunhofer IISB
Schottkystr. 10
91058 Erlangen
Germany

www.iisb.fraunhofer.de

Project	Description	File		
foxBMS BMS-Interface	Structure of Interface	overview.SchDoc		
Author	License	Version	Release Date	Sheet
foxBMS Team	Creative Commons Attribution 4.0	1.9.4	2019-03-15	1 / 6

Connector to BMS-Master primary MCU

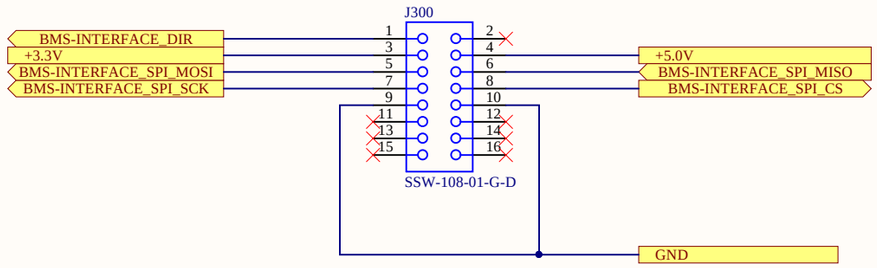

control of channel:
DIR HIGH: CS_FW = CS; CS_RV = 1
DIR LOW: CS_RV = CS; CS_FW = 1

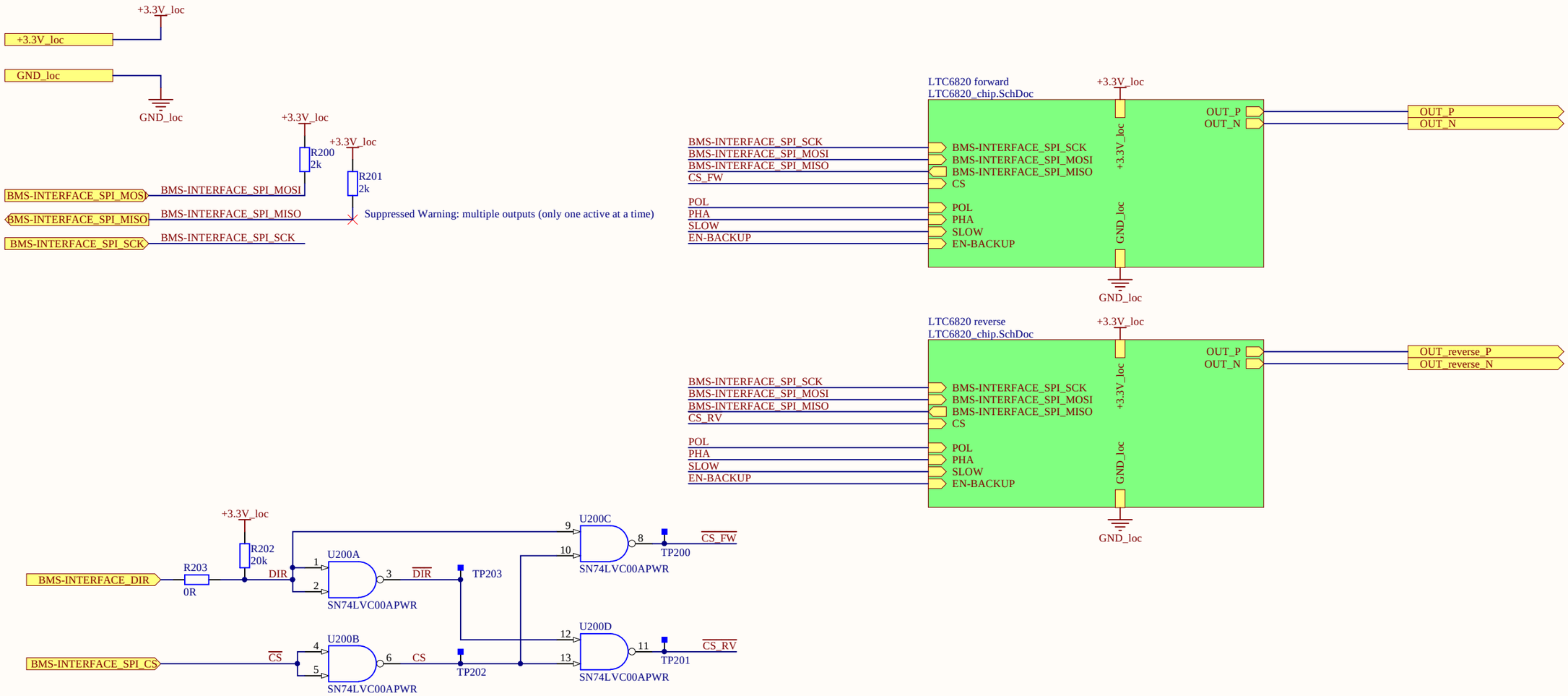

Replace with SN74LVC00AQPWRQ1 for automotive applications.

DIR HIGH: CS_FW = CS; CS_RV = 1
DIR LOW: CS_RV = CS; CS_FW = 1

Truth table

DIR	!CS	!CS_FW	!CS_RV
0	0	1	0
0	1	1	1
1	0	0	1
1	1	1	1

foxBMS	developed by: Fraunhofer IISB Schottkystr. 10 91058 Erlangen Germany	Fraunhofer IISB	Project: foxBMS BMS-Interface	Description: Two LTC6820 for forward and reverese isoSPI	File: LTC6820.SchDoc
www.foxbms.org		www.iisb.fraunhofer.de	Author: foxBMS Team	License: Creative Commons Attribution 4.0	Version: 1.9.4 / Release Date: 2019-03-15 / Sheet: 3 / 6

External side to first BMS-Slave

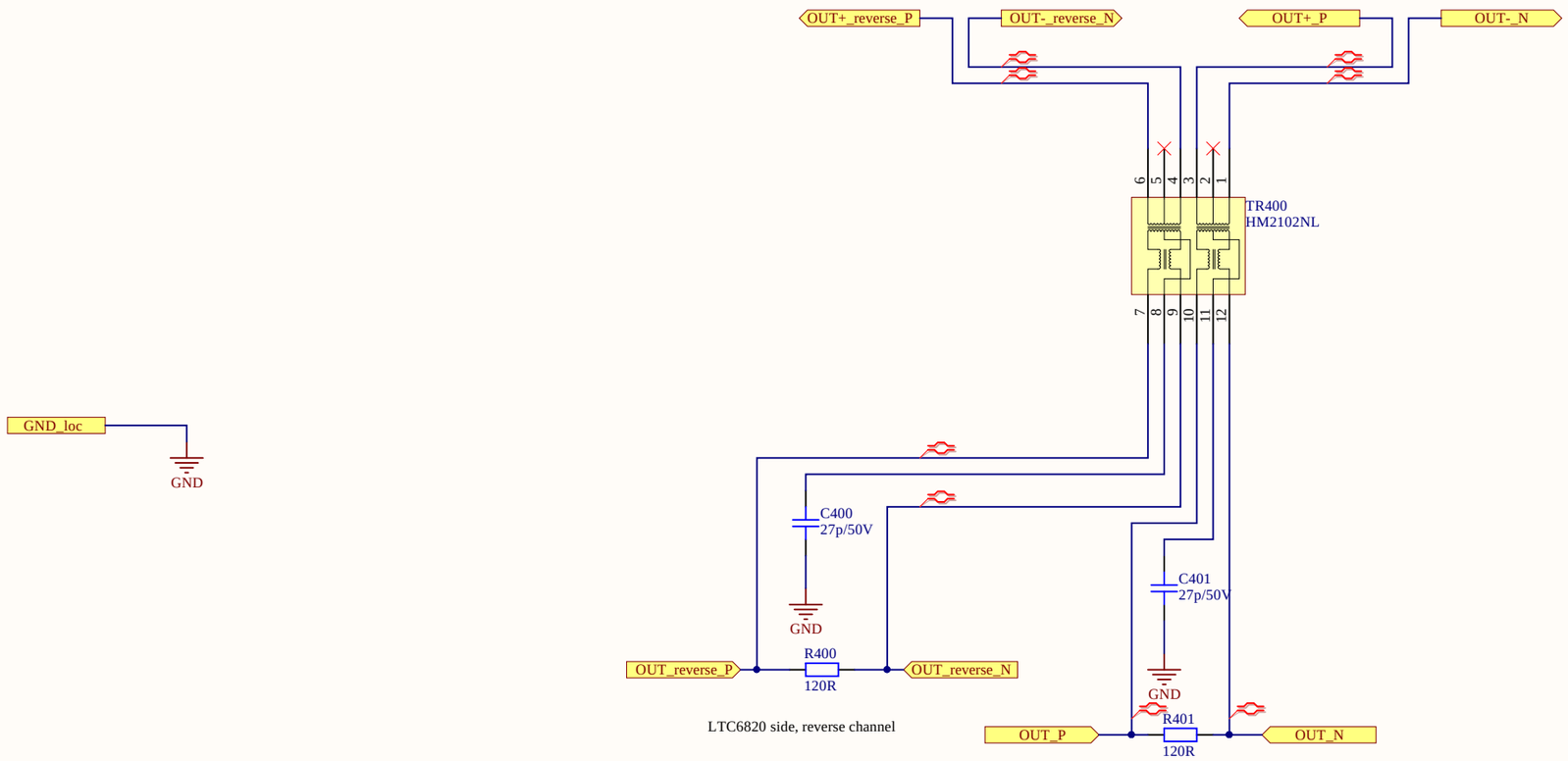

www.foxbms.org	developed by: Fraunhofer IISB Schottkystr. 10 91058 Erlangen Germany	www.iisb.fraunhofer.de	Project: foxBMS BMS-Interface	Description: Daisy Chain Isolation	File: daisy-chain_isolation.SchDoc
			Author: foxBMS Team	License: Creative Commons Attribution 4.0	Version: 1.9.4 / Release Date: 2019-03-15 / Sheet: 4 / 6

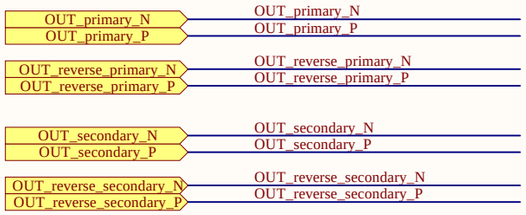

Board-to-Board Daisy Chain Connector

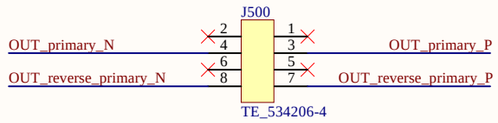

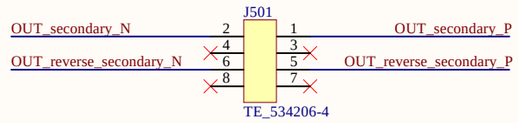

Optional Daisy Chain Connector

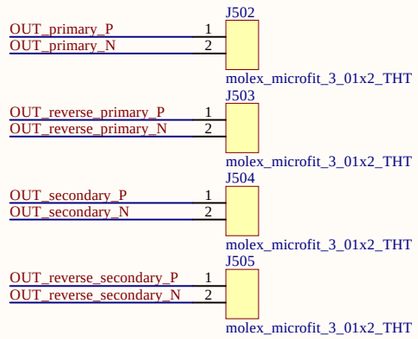

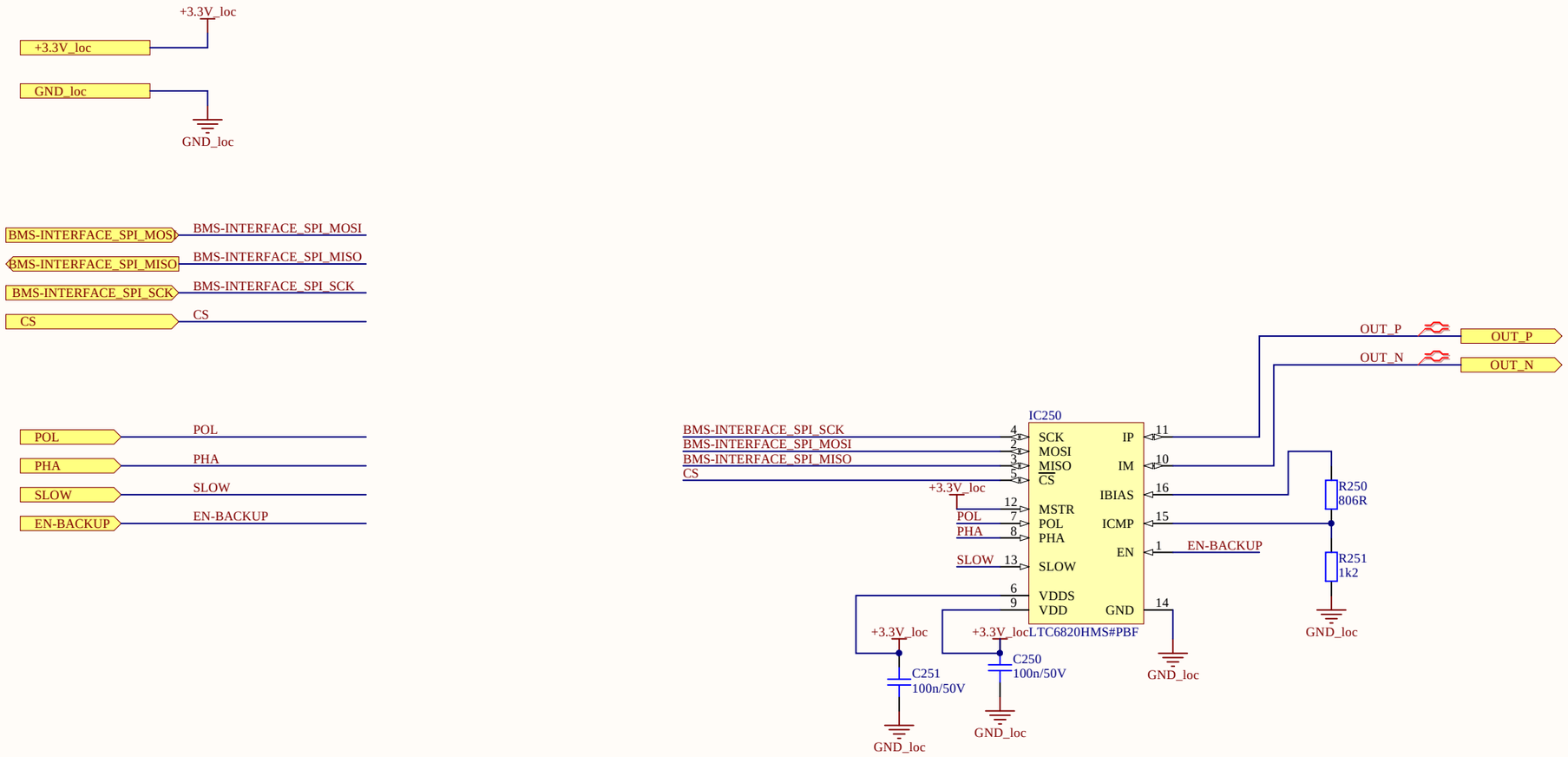

foxBMS www.foxbms.org	developed by: Fraunhofer IISB Schottkystr. 10 91058 Erlangen Germany	Fraunhofer IISB www.iisb.fraunhofer.de	Project: foxBMS BMS-Interface	Description: LTC6820	File: LTC6820_chip.SchDoc	
			Author: foxBMS Team	License: Creative Commons Attribution 4.0	Version: 1.9.4	Release Date: 2019-03-15 / Sheet: 6 / 6