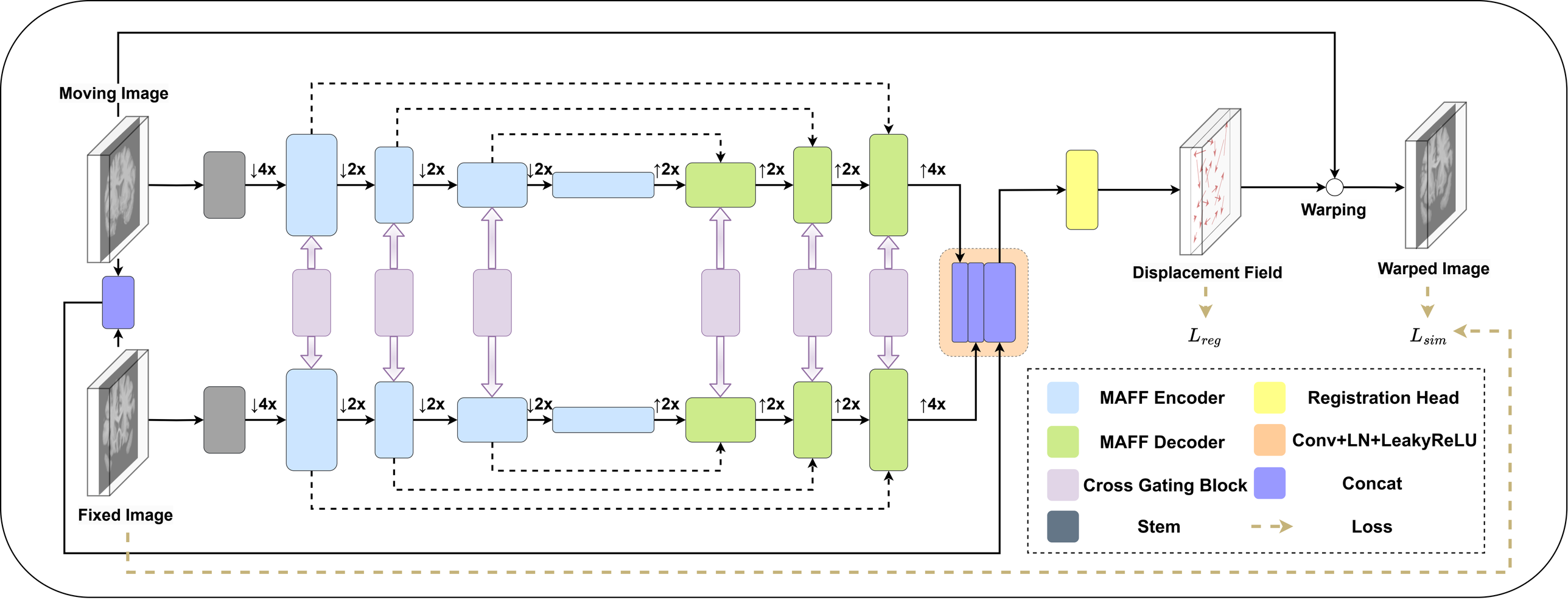
Moving Image
Fixed Image
↓4x
↓2x
↑2x
↑4x
Displacement Field
Warping
Warped Image
L_{reg}
L_{sim}
MAFF Encoder
MAFF Decoder
Cross Gating Block
Stem
Registration Head
Conv+LN+LeakyReLU
Concat
Loss