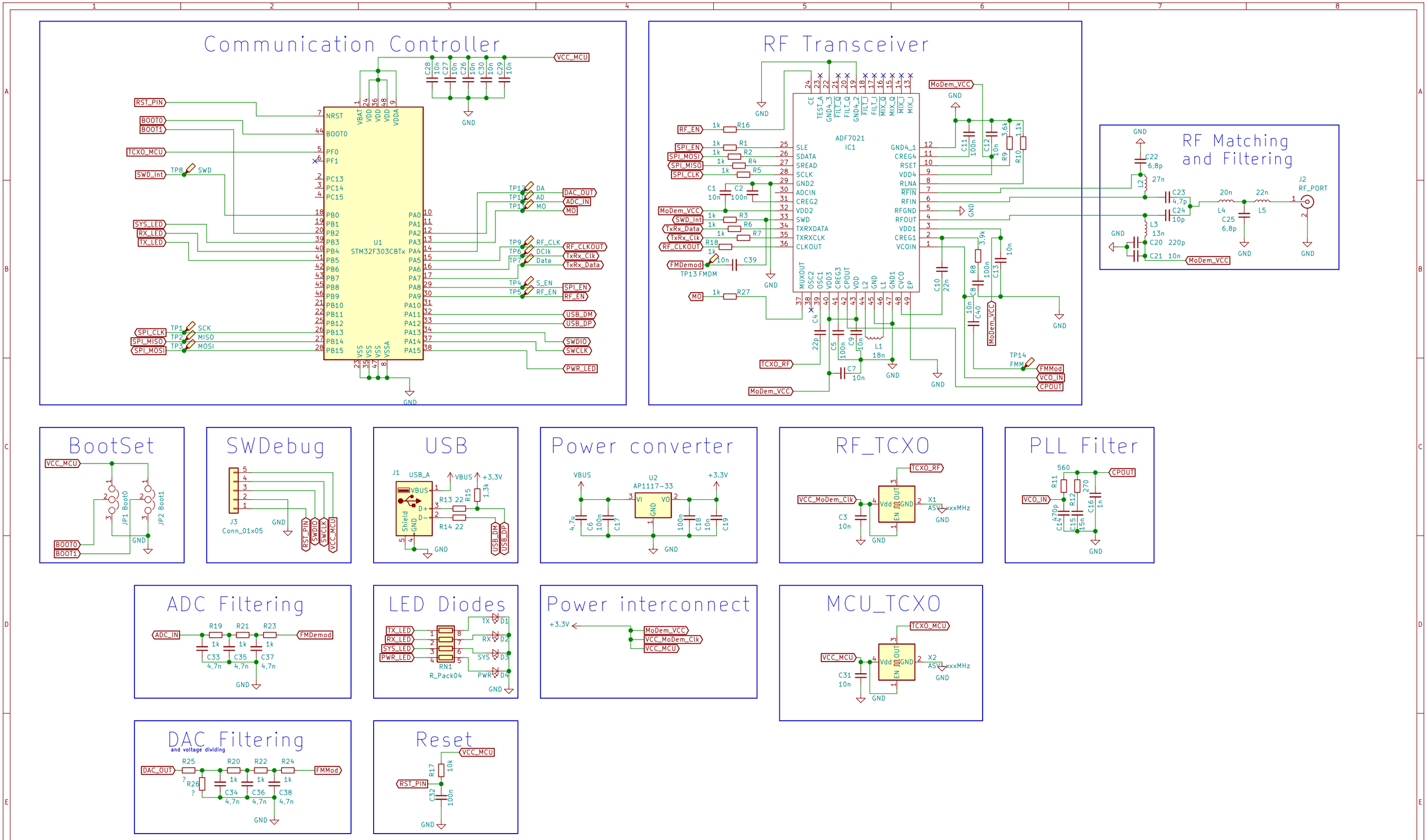

DRAFT! Not released Yet
SiModeM v2
Nikoloz Glonti / NG91 / SO3ALG

Sheet: /
File: M17_ANL_v2.sch

Title: M17_ANL

Size: A3	Date: 2019-12-29	**Rev: v2**
KiCad E.D.A. kicad 5.1.5-52549c584ubuntu18.04.1		Id: 1/1