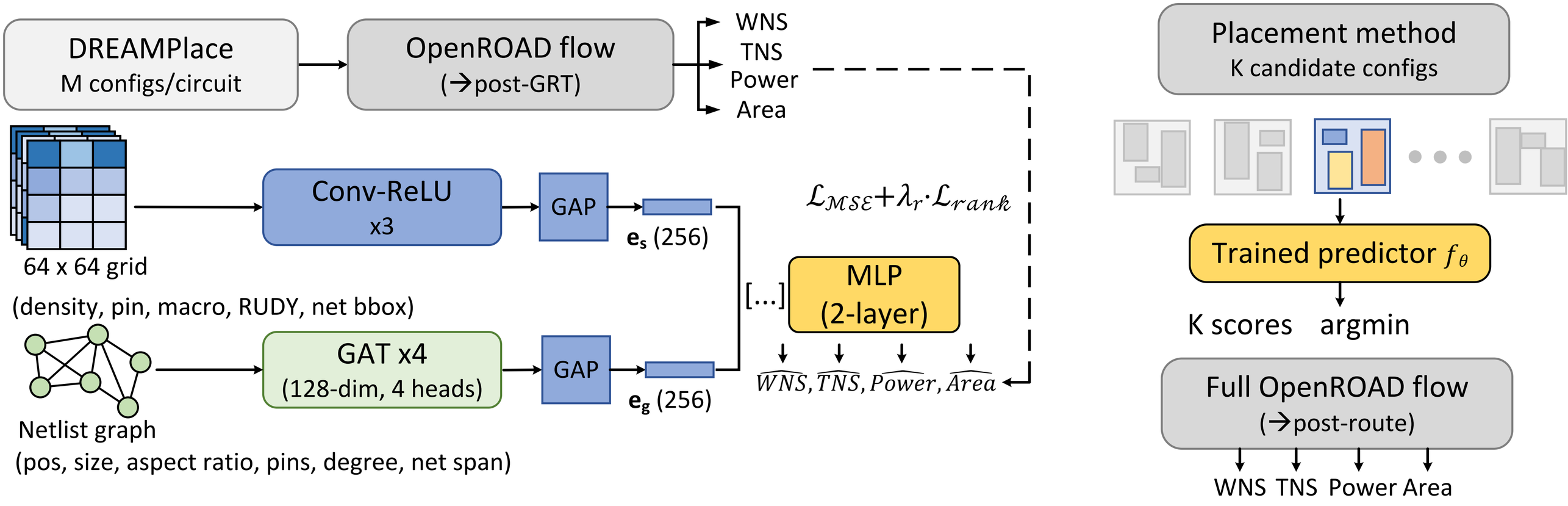

(a) Offline Predictor Training

(b) Online Configuration Selection