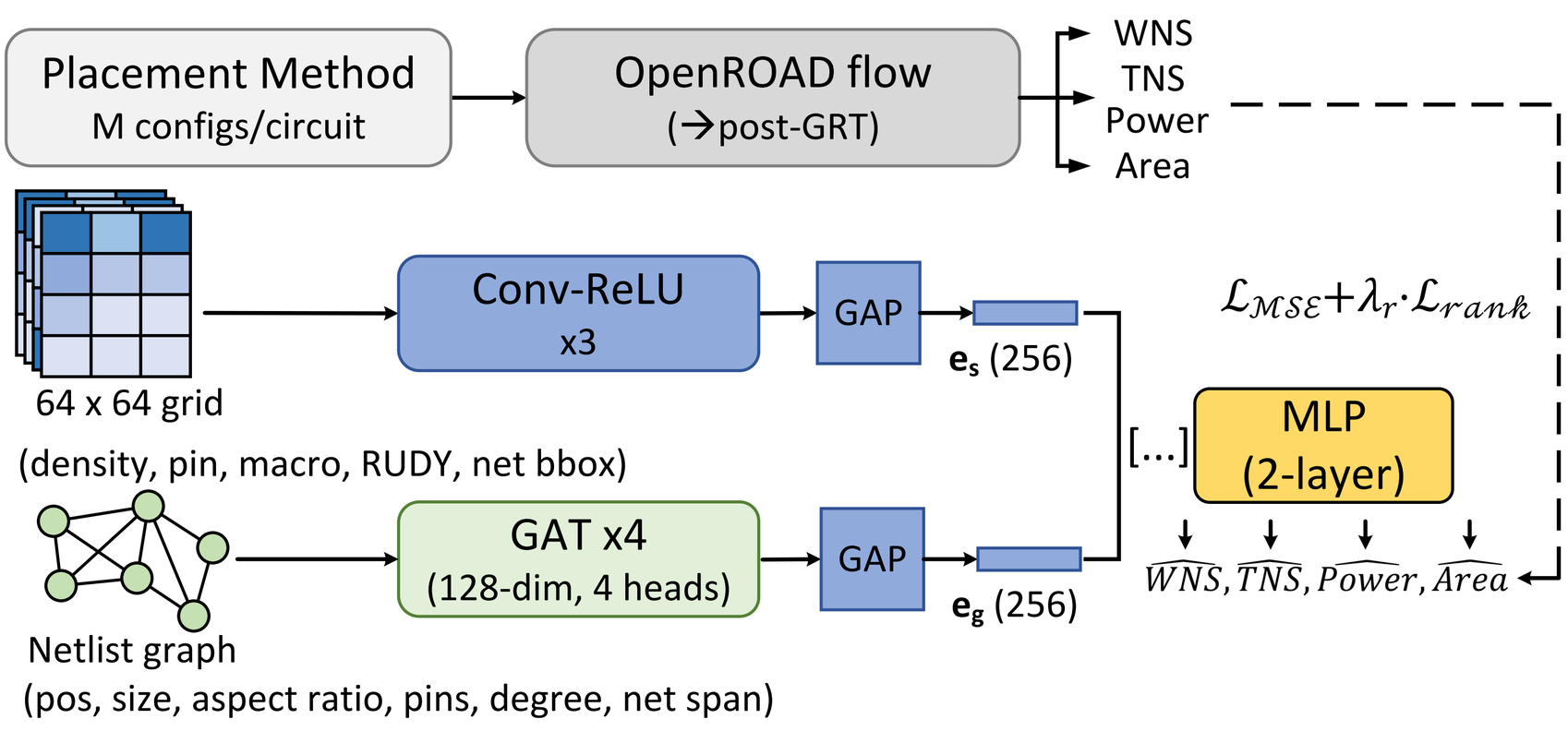

(a) Offline Predictor Training

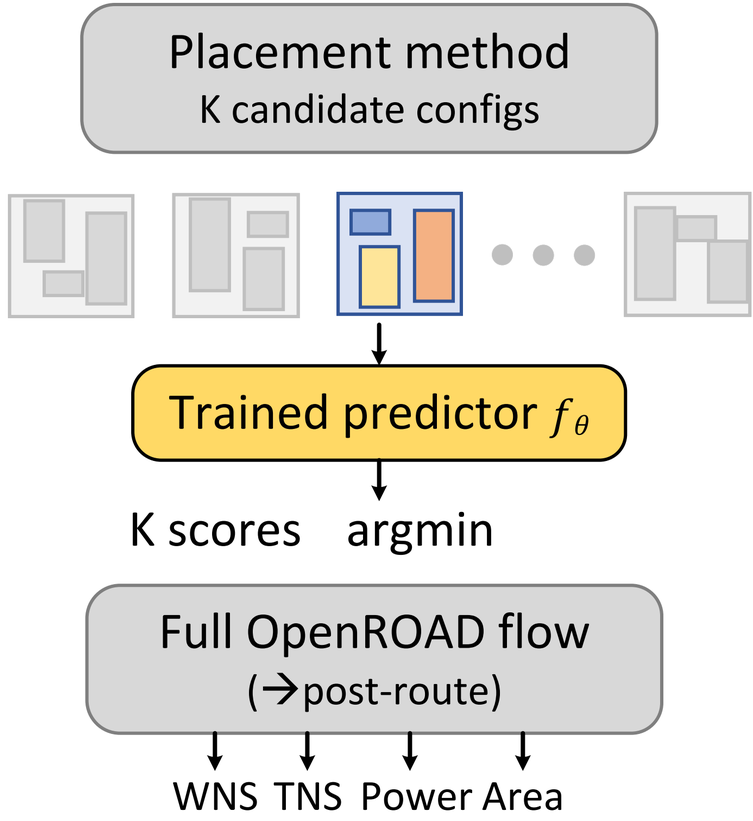

(b) Online Configuration Selection