SFWRENG 3DX4

Complete Lecture Notes

Matthew Farah

April 20, 2026

Contents

1 Introduction 2

2 Compensators and Laplace Transforms 3

3 Partial Fraction Decomposition 5

4 Irreducible Quadratics and Stability 7

5 Stability, Impedance, and Kirchhoff's Laws 9

6 Transfer Functions from Circuits 11

7 Cramer's Rule and Nodal Analysis 14

8 Op-amps and Active Circuits 18

9 Mechanical Systems 20

10 An Example in Mechanical System Analysis 23

Lecture 1

Introduction

- A control system is used to produce an output for a given input.
- Control systems can be represented by the following black-box diagram:

- An open loop system is a control system without feedback.
- A closed loop system is a control system with feedback.
- The transient response of a control system describes a system's behaviour before reaching steady state in response to some input.
- The steady state response of a control system describes the long-run behaviour of a control system in response to some input.
- The steady state error is defined to be the discrepancy between the control system's desired steady state and its actual steady state.
  - Good control systems minimize their steady state error as much as possible.
- The natural response of a control system is defined as the evolution of the control system's output due to its initial conditions.
- The forced response of a control system is defined as the evolution of the control system's output due to its input.
- The total response of a system is defined to be the sum of the system's natural and forced response.
  - Total response = natural response + forced response.
- A system is said to be stable if its natural response tends to zero.
  - Good control systems, at worst, have a natural response which oscillates around zero at a fixed amplitude.
- The goals of good control system design are five-fold:
  1. Ensure the system is stable.
  2. Produce the desired transient response.
  3. Decrease/eliminate the steady state error.
  4. Make the system robust enough to withstand disturbances.
  5. Optimize performance.

Lecture 2

Compensators and Laplace Transforms

- A compensator is a sub-system used to improve a control system's stability, performance, and/or accuracy.
- A plant describes the relationship between a control system's input and output.
- Plants employ one or more of the following techniques to minimize the steady state error of a control system:
  1. Proportional control systems.
     - Proportional control systems are compensators which directly feed a signal corresponding to the control system's error back to the system, multiplied by some proportionality constant called its gain.
  2. Integral control systems.
     - Integral control systems integrate over the control system's error signal and feed that back to the system, giving the system a way to account for the error accumulated over time.
  3. Derivative control systems.
     - Derivative control systems differentiate the control system's error signal and feed that back to the system, giving the system a way to account for how the steady state error is projected to change over time.
- Systems which incorporate all three techniques are called 'PID' systems.
- Control systems are approximated to work linearly, but due to things like friction, do not behave perfectly linear in reality.
- Since many control systems are PIDs, their outputs can be expressed as a differential equation in terms of their current/past inputs and their past outputs.
  - The Laplace transform is used to help make working with differential equations easier.
- The Laplace transform converts differential equations in the time domain to algebraic equations in the s-domain.
- The Laplace transform of a function $f(t)$ is given by:

$$\mathcal{L}\{f(t)\} = \int_0^\infty f(t)e^{-st}\,dt$$

  - Here, $s = \sigma + i\omega$ where $\sigma, \omega \in \mathbb{R}$.
- As a mnemonic:
  - Division by s corresponds to integration.
  - Multiplication by s corresponds to differentiation.
- Letting $c_{final} = \lim_{t\to\infty} c(t)$:
  - The rise time, T_r, is the time for the input to go from 10% to 90% of c_{final}.
  - The peak time, T_p, is the time required for $c(t)$ to reach its largest value.

    - Note that T_p may not always exist, such as in the case of critically/overdamped systems.
  - The percent overshoot, %OS, is the % that $c(t)$ overshoots c_{final} at $t = T_p$.

- The Laplace transform of a function may not always exist.
  - If a function is piecewise-continuous on $[0, \infty)$, its Laplace transform does exist.
- The unit step function is given by:

$$u(t) = \begin{cases} 1, & t \geq 0 \\ 0, & \text{otherwise} \end{cases}$$

- Laplace transforms are linear.
- The initial value theorem and final value theorem can only be used when the system is stable.
- Transfer functions describe the response of a control system to some input in the Laplace domain.
  - Transfer functions are always rational functions in the Laplace domain.

$$G(s) = \frac{C(s)}{R(s)} = \frac{b_m s^m + b_{m-1} s^{m-1} + \ldots + b_0 s^0}{a_n s^n + a_{n-1} s^{n-1} + \ldots + a_0 s^0}$$

- Input is always defined to be 0 for $t < 0$.
- The inverse Laplace transform is given by:

$$\mathcal{L}^{-1}\{F(s)\} = \frac{1}{2\pi i} \lim_{\omega \to \infty} \int_{\sigma - i\omega}^{\sigma + i\omega} F(s) e^{st} \, ds$$

Lecture 3

Partial Fraction Decomposition

- The inverse Laplace transform takes functions expressed in the s-domain to the time-domain.
- A rational function is said to be proper if the degree of its numerator is less than or equal to the degree of its denominator.
- Partial fraction decomposition is a common technique used to express a transfer function whose inverse Laplace transform is unknown into the sum of fractions whose inverse Laplace transform is known.
  - Partial fraction decomposition can only be performed on proper fractions.
- Convolution in the time domain corresponds to multiplication in the Laplace domain and vice versa.

Example 1: Perform partial fraction decomposition on $\frac{1}{s(s+2)}$.

Solution:

We can express that:

$$\frac{1}{s(s+2)} = \frac{A}{s} + \frac{B}{s+2}$$

Where $A, B \in \mathbb{R}$. Now, we can see that:

$$1 = A(s+2) + B(s)$$

By multiplying both sides of the equality by $s(s+2)$. Therefore:

$$1 = As + 2A + Bs$$

By equating coefficients, we have that:

$$2A = 1 \Rightarrow A = \tfrac{1}{2}$$
$$As + Bs = 0 \Rightarrow Bs = -\tfrac{1}{2}s \Rightarrow B = -\tfrac{1}{2}$$

Therefore:

$$\frac{1}{s(s+2)} = \frac{1}{2s} - \frac{1}{2(s+2)}$$

Example 2: If $Y(s) = \frac{1}{s(s+2)^2(s+1)}$, find $y(t)$.

Solution:

To find $y(t)$, we must find the partial fraction decomposition of $Y(s)$ to compute its inverse Laplace transform. We have that:

$$Y(s) = \frac{1}{s(s+2)^2(s+1)} = \frac{A}{s} + \frac{B}{s+2} + \frac{C}{(s+2)^2} + \frac{D}{s+1}$$

Now, we can see that:

$$\begin{aligned}
A &= sY(s)\Big|_{s=0} = \frac{1}{(s+2)^2(s+1)}\Big|_{s=0} = \frac{1}{(2)(1)} = \frac{1}{2} \\
C &= (s+2)^2Y(s)\Big|_{s=-2} = \frac{1}{s(s+1)}\Big|_{s=-2} = \frac{1}{(-2)(-2+1)} = \frac{1}{2} \\
D &= (s+1)Y(s)\Big|_{s=-1} = \frac{1}{s(s+2)^2}\Big|_{s=-1} = \frac{1}{(-1)(-1+2)^2} = -1
\end{aligned}$$

Finding B, however, requires (by the product rule) that we find:

$$B = (s+2)^2 \tfrac{d}{ds} Y(s)\Big|_{s=-2} = \tfrac{d}{ds}\left(\frac{1}{s(s+1)}\right)\Big|_{s=-2} = \frac{1}{(s(s+1))^2}\Big|_{s=-2}$$

Note to self: Come back and finish this.

Lecture 4

Irreducible Quadratics and Stability

- Note: the midterm will have a physical modelling question for mechanical and electrical systems.
- A pole is a value of s which makes the denominator of a transfer function zero.
  - A pole is said to be 'unstable' if its real component is greater than zero, and 'semi-stable' if its real component equals zero.
- A quadratic is said to be 'irreducible' if its roots are complex numbers with non-zero imaginary components.

Example 1: Compute $y(t)$ where $Y(s) = \frac{3}{s(s^2+2s+5)}$.

Solution:

Note that $Y(s)$ has an irreducible quadratic in the denominator. As earlier, to compute $y(t)$, we must decompose $Y(s)$.

(I) Decompose $Y(s)$.

$$\frac{3}{s(s^2+2s+5)} = \frac{A}{s} + \frac{Bs+C}{s^2+2s+5}$$

We therefore have that:

$$\begin{aligned} 3 &= A(s^2+2s+5) + (Bs+C)(s) \\ 3 &= As^2 + 2As + 5A + Bs^2 + Cs \end{aligned}$$

Thus, by equating coefficients, we have:

$$\begin{aligned} 5A = 3 &\Rightarrow A = \tfrac{3}{5} \\ As^2 + Bs^2 = 0 &\Rightarrow Bs^2 = -\tfrac{3}{5}s^2 \Rightarrow B = -\tfrac{3}{5} \\ 2As + Cs = 0 &\Rightarrow Cs = -\tfrac{6}{5}s \Rightarrow C = -\tfrac{6}{5} \end{aligned}$$

Therefore:

$$Y(s) = \frac{3}{5s} + \frac{-3s-6}{5(s^2+2s+5)}$$

(II) Compute $y(t)$.

We know that:

$$\begin{aligned}
y(t) &= \mathcal{L}^{-1}\{Y(s)\} \\
&= \mathcal{L}^{-1}\left\{\frac{3}{5s} - \frac{3s+6}{5(s^2+2s+5)}\right\} \\
&= \frac{3}{5}\mathcal{L}^{-1}\left\{\frac{1}{s}\right\} - \frac{3}{5}\mathcal{L}^{-1}\left\{\frac{s+2}{s^2+2s+5}\right\}
\end{aligned}$$

$\mathcal{L}^{-1}\left\{\frac{1}{s}\right\}$ is easy enough to find, but what about $\mathcal{L}^{-1}\left\{\frac{s+2}{s^2+2s+5}\right\}$? Well, through some clever algebra, observe that:

$$\begin{aligned}
\frac{s+2}{s^2+2s+5} &= \frac{s+2}{s^2+2s+1+4} \\
&= \frac{s+2}{(s+1)^2+4} \\
&= \frac{s+1+1}{(s+1)^2+2^2} \\
&= \frac{s+1}{(s+1)^2+2^2} + \frac{1}{(s+1)^2+2^2} \\
&= \frac{s+1}{(s+1)^2+2^2} + \frac{1}{2}\left(\frac{2}{(s+1)^2+2^2}\right)
\end{aligned}$$

Now, note that $\mathcal{L}\{e^{-at}\cos(\omega t)\} = \frac{s+a}{(s+a)^2+\omega^2}$ and $\mathcal{L}\{e^{-at}\sin(\omega t)\} = \frac{\omega}{(s+a)^2+\omega^2}$. This is an awful lot like what we found earlier! Thus:

$$\begin{aligned}
y(t) &= \frac{3}{5}\mathcal{L}^{-1}\left\{\frac{1}{s}\right\} - \frac{3}{5}\mathcal{L}^{-1}\left\{\frac{s+1}{(s+1)^2+2^2}\right\} - \frac{3}{10}\mathcal{L}^{-1}\left\{\frac{2}{(s+1)^2+2^2}\right\} \\
&= \frac{3}{5}u(t) - \frac{3}{5}e^{-t}\cos(2t) - \frac{3}{10}e^{-t}\sin(2t)
\end{aligned}$$

Lecture 5

Stability, Impedance, and Kirchhoff's Laws

- For a system to be stable:
  1. It cannot have any poles with positive real components.
  2. It can only have at most one pole at the origin.
- There exist multiple different definitions of stability:
  1. Bounded-Input Bounded-Output (BIBO) stability.
  2. *Note to self: Elaborate.*
- The act of making the real component of the poles of a transfer function more positive, while still remaining negative:
  1. Keeps the system stable.
  2. Increases the system's response time.
- Ohm's law states that $v(t) = i(t)R$.
  - In the Laplace domain, Ohm's law states that $V(s) = I(s)R$.
- The concept of impedance (denoted $Z(s)$) generalizes the concept of resistance to circuit elements other than resistors to make modelling electrical systems easier.
  - Impedance is given by:

$$Z(s) = \frac{V(s)}{I(s)} = R$$

- Capacitors, inductors, and resistors are all said to have an impedance.
- Admittance is defined as the reciprocal of impedance.
  - Note: Not used much if at all in this course.
- For a capacitor of capacitance C, an inductor of inductance L, and a resistor of resistance R:
  - The capacitor's impedance is $\frac{1}{Cs}$.
  - The inductor's impedance is Ls.
  - The resistor's impedance is R.
- The impedance of circuit elements in series with impedances $Z_1, \ldots, Z_n$ is given by:

$$Z_s(s) = Z_1(s) + \ldots + Z_n(s)$$

- The impedance of circuit elements in parallel with impedances $Z_1, \ldots, Z_n$ is given by:

$$\frac{1}{Z_p(s)} = \frac{1}{Z_1(s)} + \ldots + \frac{1}{Z_n(s)}$$

- Kirchhoff's current law states that the sum of all currents entering and leaving a node is zero.
  - Current flowing into a node is said to be positive.
  - Current flowing out of a node is said to be negative.
- Kirchhoff's voltage law states that the sum of all voltages around a closed path sum to zero.

Lecture 6

Transfer Functions from Circuits

Example 1: Find the transfer function for the voltage across the capacitor, $V_c(s)$, in the following circuit:

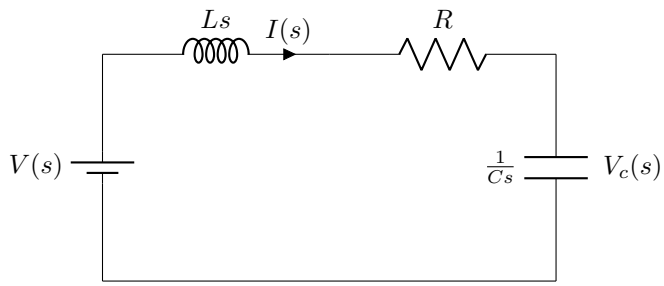

Solution:

We know that the transfer function representing the voltage across the capacitor is given by:

$$G_c(s) = \frac{V_c(s)}{V(s)}$$

By Kirchhoff's voltage law, we also know that the sum of the voltages around a loop must equal zero. So:

$$V(s) - LsI(s) - RI(s) - V_c(s) = 0$$

We also know the potential difference across the capacitor, $V_c(s)$, can be expressed by $V_c(s) = \frac{1}{Cs}I(s)$. So, using the above substitution and solving for $I(s)$, we find that:

$$\begin{aligned}
& V(s) - LsI(s) - RI(s) - \tfrac{1}{Cs}I(s) = && 0 \\
\implies \quad & LsI(s) + RI(s) + \tfrac{1}{Cs}I(s) = && V(s) \\
\implies \quad & \left(Ls + R + \tfrac{1}{Cs}\right) I(s) = && V(s) \\
\implies \quad & I(s) = && \frac{V(s)}{Ls + R + \frac{1}{Cs}} \\
\implies \quad & I(s) = && \frac{CsV(s)}{LCs^2 + RCs + 1}
\end{aligned}$$

And since $V_c(s) = \frac{1}{Cs}I(s)$, as stated before, we can find $V_c(s)$ to be:

$$\begin{aligned}
V_c(s) &= \tfrac{1}{Cs}I(s) \\
&= \tfrac{1}{Cs}\left(\frac{CsV(s)}{LCs^2 + RCs + 1}\right) \\
&= \frac{V(s)}{LCs^2 + RCs + 1}
\end{aligned}$$

And so, the transfer function for the voltage of the capacitor is given by:

$$G_c(s) = \frac{V_c(s)}{V(s)} = \frac{1}{LCs^2 + RCs + 1}$$

Example 2: Find the transfer function, $G_c(s)$, for the voltage across the capacitor, $V_c(s)$, in the following circuit:

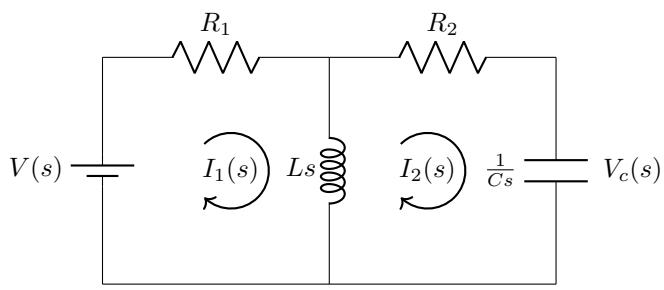

Solution:

As before, we know $G_c(s) = \frac{V_c(s)}{V(s)}$, and by inspection of the circuit, we can see that Kirchhoff's voltage law tells us that for the first loop:

$$\begin{aligned}
& V(s) - R_1 I_1(s) - Ls(I_1(s) - I_2(s)) = && 0 \\
\implies \quad & R_1 I_1(s) + Ls(I_1(s) - I_2(s)) = && V(s) \\
\implies \quad & R_1 I_1(s) + LsI_1(s) - LsI_2(s) = && V(s) \\
\implies \quad & (R_1 + Ls)I_1(s) - LsI_2(s) = && V(s) \quad \ldots(1)
\end{aligned}$$

And similarly, for loop two:

$$\begin{aligned}
Ls(I_2(s) - I_1(s)) + R_2 I_2(s) + V_c(s) = 0 \\
LsI_2(s) - LsI_1(s) + R_2 I_2(s) + V_c(s) = 0
\end{aligned}$$

And since $V_c(s) = \frac{1}{Cs} I_2(s)$:

$$\begin{aligned}
& LsI_2(s) - LsI_1(s) + R_2 I_2(s) + \tfrac{1}{Cs} I_2(s) = && 0 \\
\implies \quad & -LsI_1(s) + \left(Ls + R_2 + \tfrac{1}{Cs}\right) I_2(s) = && 0 \quad \ldots(2)
\end{aligned}$$

Putting equations (1) and (2) into matrix form, we can see that:

$$\begin{bmatrix} R_1 + Ls & -Ls \\ -Ls & Ls + R_2 + \frac{1}{Cs} \end{bmatrix} \begin{bmatrix} I_1(s) \\ I_2(s) \end{bmatrix} = \begin{bmatrix} V(s) \\ 0 \end{bmatrix}$$

Since we're interested in finding the transfer function for $V_c(s)$, and since $V_c(s) = \frac{1}{Cs} I_2(s)$, we should seek to compute $I_2(s)$. To do that, we will make use of Kramer's rule. For these particular matrices, Kramer's rule tells us that:

$$I_2(s) = \frac{\det(A_2)}{\det(A)}$$

Where:

$$A = \begin{bmatrix} R_1 + Ls & -Ls \\ -Ls & Ls + R_2 + \frac{1}{Cs} \end{bmatrix}, \quad A_2 = \begin{bmatrix} R_1 + Ls & V(s) \\ -Ls & 0 \end{bmatrix}$$

First, we can find that:

$$\begin{aligned} \det(A) &= (R_1 + Ls)\left(Ls + R_2 + \tfrac{1}{Cs}\right) - (-Ls)(-Ls) \\ &= LR_1 s + R_1 R_2 + \tfrac{R_1}{Cs} + L^2 s^2 + LR_2 s + \tfrac{L}{C} - L^2 s^2 \\ &= LR_1 s + R_1 R_2 + \tfrac{R_1}{Cs} + LR_2 s + \tfrac{L}{C} \\ &= \tfrac{R_1}{Cs} + \left(R_1 R_2 + \tfrac{L}{C}\right) + (LR_1 + LR_2)s \end{aligned}$$

And similarly:

$$\begin{aligned} \det(A_2) &= (R_1 + Ls)(0) - (V(s))(-Ls) \\ &= LsV(s) \end{aligned}$$

Therefore:

$$I_2(s) = \frac{LsV(s)}{\frac{R_1}{Cs} + \left(R_1 R_2 + \frac{L}{C}\right) + (LR_1 + LR_2)s}$$

Hence:

$$\begin{aligned} V_c(s) &= \tfrac{1}{Cs} I_2(s) \\ &= \tfrac{1}{Cs}\left(\frac{LsV(s)}{\frac{R_1}{Cs} + \left(R_1 R_2 + \frac{L}{C}\right) + (LR_1 + LR_2)s}\right) \\ &= \frac{LV(s)}{R_1 + (R_1 R_2 C + L)s + (LR_1 C + LR_2 C)s^2} \end{aligned}$$

And thus:

$$G_c(s) = \frac{V_c(s)}{V(s)} = \frac{L}{R_1 + (R_1 R_2 C + L)s + (LR_1 C + LR_2 C)s^2}$$

Lecture 7

Cramer's Rule and Nodal Analysis

- Cramer's rule is a very useful tool to find a specific unknown in a system of equations.
  - States that for a system of equations $A\vec{x} = \vec{b}$ where $\vec{x} = \langle x_1, \ldots, x_n \rangle$, $x_i = \frac{\det(A_i)}{\det(A)}$, where A_i is the matrix produced by replacing column i of A with $\vec{b}$.
- Nodal analysis is another method of finding the transfer function for circuit elements.
  - Leverages Kirchhoff's current law.
    - States that the net current into/out of a junction equals zero.

$$\sum_{i \in \text{junction}} i(t) = 0$$

  - A junction in a circuit is a point where two or more wires intersect.
    - Nodal analysis works by identifying the voltage at junctions with a node and using Kirchhoff's current law to determine the current that passes through the circuit elements between them.

Example 1: Using nodal analysis, find the transfer function, $G_c(s)$, for the potential difference across the capacitor, $V_c(s)$, in the following circuit:

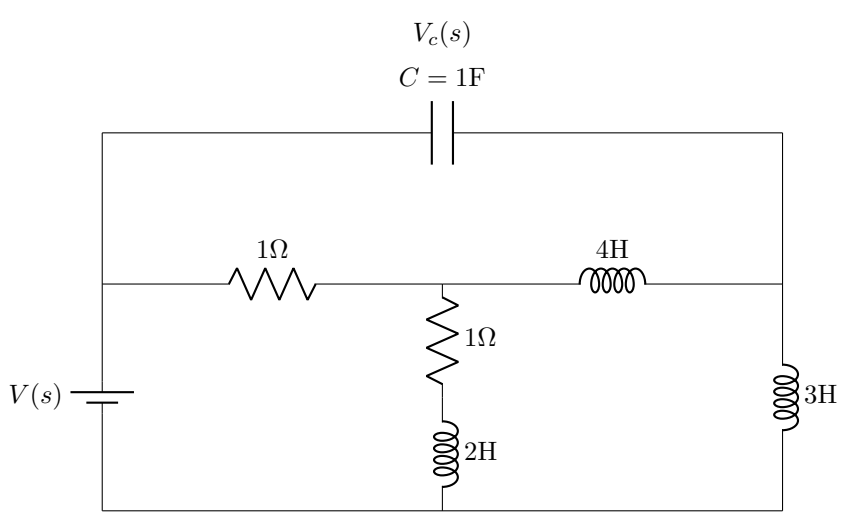

Solution:

Before diving straight into calculations, I think it's best to first try and give some intuition behind the method.

Firstly, in order to do nodal analysis, we need to identify where the nodes in our circuit actually are. Using the description of nodes given earlier, the circuit's nodes, as well as the respective currents passing through them, can be depicted as follows:

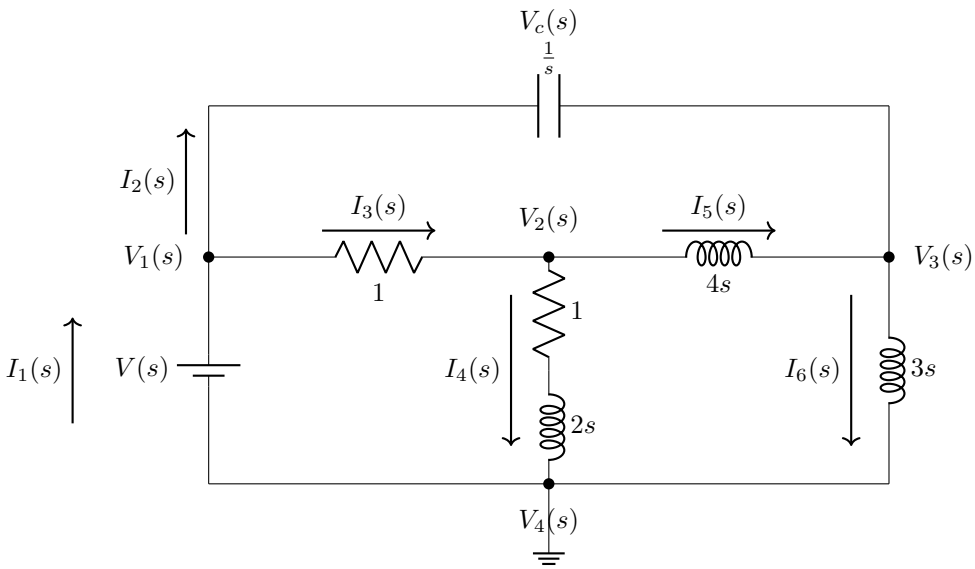

Now, it's important to make note of a few things:

- A source (i.e. the ground) was added to node $V_4(s)$.
  - Makes the voltage at that node equal to zero (i.e. $V_4(s) = 0$).
- In general, we can always add a source to ground for one node in the circuit.
  - Picking which node makes solving the problem easier should be chosen.
  - Picking the best node to do this with comes with practice.
- $V_1 = V(s)$.
  - Since the <u>only</u> circuit element between $V_1(s)$ and the ground is the voltage source $V(s)$.
  - Thus, we don't need to consider the current between $V(s)$ and $V_1(s)$ (I.E., $I_1(s)$).
- We can express $V_c(s)$.
  - $V_c(s) = V_1(s) - V_3(s) = V(s) - V_3(s)$

Now, proceeding to the calculations, we can use Kirchhoff's current law to ascertain that:

$$I_3(s) = I_4(s) + I_5(s) \quad \ldots (1)$$
$$I_6(s) = I_2(s) + I_5(s) \quad \ldots (2)$$

By Ohm's law, the change in voltage between any two nodes is given by $V(s) = IZ(s)$ (where $Z(s)$ is the impedance between the two nodes).

So, using the equations above and the rules regarding adding impedences in series, we arrive at equation (3):

$$
\begin{aligned}
& I_3(s) = I_4(s) + I_5(s) \\
\implies \quad & \tfrac{V_1(s)-V_2(s)}{1} = \tfrac{V_2(s)-V_4(s)}{1+2s} + \tfrac{V_2(s)-V_3(s)}{4s} \\
\implies \quad & V(s) - V_2(s) = \tfrac{V_2(s)-0}{1+2s} + \tfrac{V_2(s)-V_3(s)}{4s} \\
\implies \quad & \left(1 + \tfrac{1}{1+2s} + \tfrac{1}{4s}\right) V_2(s) - \tfrac{1}{4s} V_3(s) = V(s) \ldots (3)
\end{aligned}
$$

and equation (4):

$$
\begin{aligned}
& I_6(s) = I_2(s) + I_5(s) \\
\implies \quad & \tfrac{V_3(s)-V_4(s)}{3s} = \tfrac{V_1(s)-V_3(s)}{1/s} + \tfrac{V_2(s)-V_3(s)}{4s} \\
\implies \quad & \tfrac{V_3(s)-0}{3s} = sV(s) - sV_3(s) + \tfrac{1}{4s} V_2(s) - \tfrac{1}{4s} V_3(s) \\
\implies \quad & -\tfrac{1}{4s} V_2(s) + \left(s + \tfrac{1}{3s} + \tfrac{1}{4s}\right) V_3(s) = sV(s) \\
\implies \quad & -\tfrac{1}{4s} V_2(s) + \left(s + \tfrac{7}{12s}\right) V_3(s) = sV(s) \ldots (4)
\end{aligned}
$$

So, representing equations (3) and (4) in matrix form, we have:

$$
\begin{bmatrix} 1 + \frac{1}{2s+1} + \frac{1}{4s} & -\frac{1}{4s} \\ -\frac{1}{4s} & s + \frac{7}{12s} \end{bmatrix} \begin{bmatrix} V_2(s) \\ V_3(s) \end{bmatrix} = \begin{bmatrix} V(s) \\ sV(s) \end{bmatrix}
$$

By Cramer's rule, we know that $V_3(s) = \frac{\det(A_2)}{\det(A)}$, where:

$$
A = \begin{bmatrix} 1 + \frac{1}{2s+1} + \frac{1}{4s} & -\frac{1}{4s} \\ -\frac{1}{4s} & s + \frac{7}{12s} \end{bmatrix}, \quad A_2 = \begin{bmatrix} 1 + \frac{1}{1+2s} + \frac{1}{4s} & V(s) \\ -\frac{1}{4s} & sV(s) \end{bmatrix}
$$

So, since:

$$
\begin{aligned}
\det(A) &= \left(1 + \frac{1}{2s+1} + \frac{1}{4s}\right)\left(s + \frac{7}{12s}\right) - \left(-\frac{1}{4s}\right)\left(-\frac{1}{4s}\right) \\
&= s + \frac{s}{2s+1} + \frac{7}{24s^2+12s} + \frac{7}{12s} + \frac{1}{12s^2} + \frac{1}{4} \\
&= \frac{24s^4 + 30s^3 + 17s^2 + 16s + 1}{24s^3 + 12s^2}
\end{aligned}
$$

And:

$$\det(A_2) = \left(1 + \frac{1}{2s+1} + \frac{1}{4s}\right)(sV(s)) - V(s)\left(-\frac{1}{4s}\right)$$

$$= \frac{1}{4}V(s) + sV(s) + \frac{1}{4s}V(s) + \frac{s}{2s+1}V(s)$$

$$= \frac{\left(8s^3 + 10s^2 + 3s + 1\right)V(s)}{8s^2 + 4s}$$

Hence, we have that:

$$V_3(s) = \frac{\det(A_2)}{\det(A)}$$

$$= \frac{\left(8s^3 + 10s^2 + 3s + 1\right)V(s)}{8s^2 + 4s} \div \frac{24s^4 + 30s^3 + 17s^2 + 16s + 1}{24s^3 + 12s^2}$$

$$= \frac{\left(24s^4 + 30s^3 + 9s^2 + 3s\right)V(s)}{24s^4 + 30s^3 + 17s^2 + 16s + 1}$$

And since $V_c(s) = V(s) - V_3(s)$:

$$V_c(s) = V - \frac{\left(24s^4 + 30s^3 + 9s^2 + 3s\right)V(s)}{24s^4 + 30s^3 + 17s^2 + 16s + 1}$$

$$= \frac{\left(8s^2 + 13s + 1\right)V(s)}{24s^4 + 30s^3 + 17s^2 + 16s + 1}$$

And thus, $G_c(s)$ is given by:

$$G_c(s) = \frac{V_c(s)}{V(s)}$$

$$= \frac{\left(8s^2 + 13s + 1\right)V(s)}{24s^4 + 30s^3 + 17s^2 + 16s + 1} \div V(s)$$

$$= \frac{8s^2 + 13s + 1}{24s^4 + 30s^3 + 17s^2 + 16s + 1}$$

Lecture 8

Op-amps and Active Circuits

- Quiz next week will be on circuit analysis.
- Op-amps probably won't be on the midterm.
- Operational amplifiers (op-amps) are a kind of circuit element used to produce 'active' circuits.
  - Active circuits are used to implement transfer functions as a circuit.
- Passive circuits only use passive circuit elements.
  - Passive circuit elements only consume energy.
    - Ex. Resistors, capacitors, etc.
  - All circuits seen thus far in the course used only passive elements (besides the source voltage).
- Active circuits use one or more active circuit elements.
  - Active circuit elements amplify, produce, or switch energy.
    - Ex. Source voltages, op-amps, etc.
- Op-amps effectively work like low-pass filters with a very high cut-off.
- Op-amps look like this:

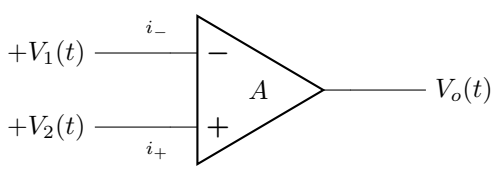

Where:

- $V_1(t)$ and $V_2(t)$ are its input voltages.
- $i_-(t)$ and $i_+(t)$ are its input currents.
- $V_o(t)$ is its output voltage.
- A is its gain.

- Op-amps have four important characteristics in an ideal setting:
  1. $V_o(t) = A(V_2(t) - V_1(t))$.
  2. High input impedance.
     - I.E. $Z_i = \infty$.
  3. Low output impedance.

    - I.E. $Z_o = 0$.
  4. High gain constant.
    - I.E. $A = \infty$.

- Ideal op-amps also:
  - Have equal input voltages.
    * $V_1(t) = V_2(t)$.
  - Have zero input currents.
    * $i_-(t) = i_+(t) = 0$.
- The relationship between the input and output voltages of an op-amp is linear around a specific input voltage.
  - The saturation voltages are the voltages where this is no longer true.
- Chaining op-amps together makes them more stable.
  - *Aside:* Not too sure what exactly that means.

Lecture 9

Mechanical Systems

- **Midterm Hints**:
  - Will have at least one circuit question.
  - Will have at least one question on mechanical systems.
    - Question will have 2-3 degrees of freedom.
    - Good chance it's a gear question.
- The two kinds of mechanical systems we'll analyze in this course are:
  1. Translational systems.
  2. Rotational systems.
- The transfer function of a mechanical system can be implemented as a circuit and vice-versa.
- The transfer functions of translational systems describe the ratio between an input force and the displacement of some body.
- Impedances in translational systems work as follows:
  - A mass M imparts an impedance of Ms^2 on a moving body.
  - A viscous damper with damping constant f_v imparts an impedance of $f_v s$ on a moving body.
  - A spring with spring constant K imparts an impedance of K on a moving body.
- The direction of a body's motion is defined relative to the external force acting on the system.
- Newton's third law of motion states that the net force acting on an object must sum to zero. In other words:

$$\sum_{F_n \in \text{object}} F_n = 0$$

Example 1: Draw the Free Body Diagram (FBD) and determine the transfer function $G(s)$ for a system consisting of a body:

- With a mass M.
- Attached to a viscous damper with damping coefficient f_v.
- Attached to a spring with spring constant K.
- Being accelerated by a force $f(t)$.

Solution:

Based on the description given, we can depict the system in the time domain like so:

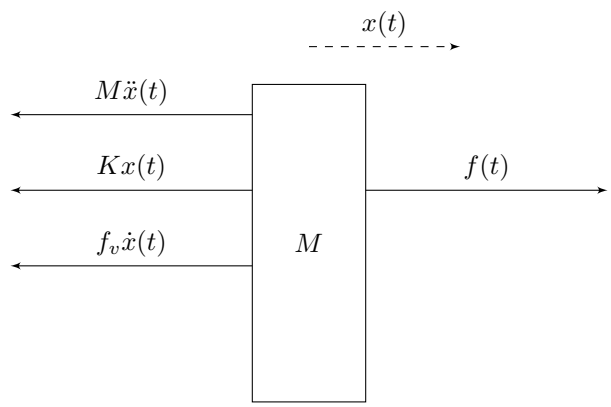

In the Laplace domain, this looks like:

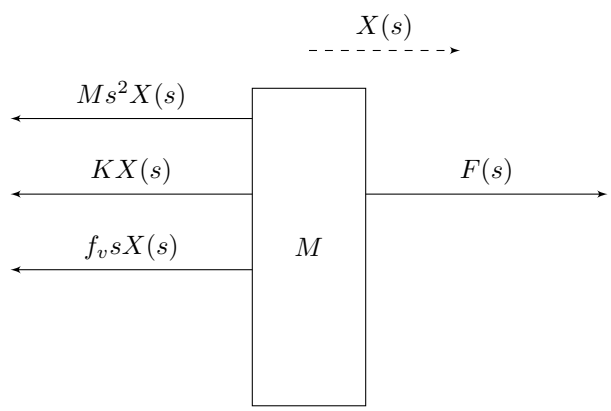

We know the transfer function for the body's displacement, $G(s)$, is given by $G(s) = \frac{X(s)}{F(s)}$. By Newton's third law of motion, the FBD above implies that:

$$\begin{aligned} KX(s) + f_vsX(s) + Ms^2X(s) &= F(s) \\ \implies (K + f_vs + Ms^2)X(s) &= F(s) \\ \implies X(s) &= \frac{F(s)}{Ms^2 + f_vs + K} \end{aligned}$$

And thus:

$$G(s) = \frac{X(s)}{F(s)} = \frac{1}{Ms^2 + f_vs + K}$$

- The degrees of freedom (dof) of a translational system describes the number of linearly independent motions within the system.

  - Two bodies have linearly independent motions from each other if you're still able to move one of them if you keep the other locked in place.
  - The number of equations needed to find the transfer function of a system is equal to its degrees of freedom.

- Mechanical systems obey the superposition principle.
  - States that the equation describing the motion of a body M_i can be found by:
    1. Holding all other bodies still and finding the forces acting on M_i solely due to its own motion.
    2. Holding M_i and all other bodies still except for some body M_j, and finding all forces acting on M_i induced by moving M_j.
    3. Repeating 2) until every body with a linearly independent motion to M_i has been covered.
    4. Summing all forces acting on M_i found in steps 1) to 3) and setting that equal to zero.

Lecture 10

An Example in Mechanical System Analysis

- **Midterm hints:**
  - There will be four questions on the midterm:
    1. One on Laplace transforms.
    2. One on circuits.
    3. One on mechanical systems.
    4. One on either:
       * Block diagram reductions.
       * A Rotational systems.
- Generally, the degrees of freedom of a mechanical system equals the number of masses/inertias in it.
  - Note: this is not always the case.

Example 1: Find the transfer function for the third body, $G(s) = \frac{X_3(s)}{F(s)}$, given the system:

NOTE: THE FOLLOWING IS MY PISS POOR ATTEMPT AT DRAWING THE SYSTEM USING TIKZ. I WILL COME BACK AND FIX THIS TOMORROW IM TIRED AS HELL. JUST USE THE INDIVIDUAL FBDS IN THE MEANTIME.

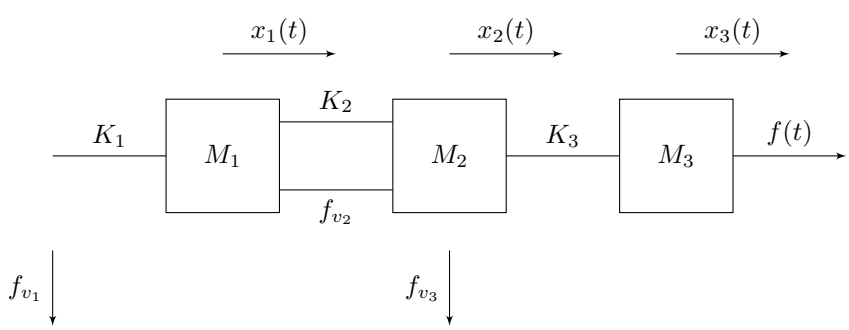

And that:

$$
\begin{aligned}
&M_1 = 4\,\text{kg}, \quad M_2 = 5\,\text{kg}, \quad M_3 = 5\,\text{kg} \\
&f_{v_1} = 2\,\text{Ns/m}, \quad f_{v_2} = 2\,\text{Ns/m}, \quad f_{v_3} = 3\,\text{Ns/m} \\
&K_1 = 5\,\text{N/m}, \quad K_2 = 4\,\text{N/m}, \quad K_3 = 4\,\text{N/m},
\end{aligned}
$$

$$
\det\left(\begin{bmatrix} 4s^2+4s+8 & -4 & -2s \\ -4 & 5s^2+3s+4 & -3s \\ -2s & -3s & 5s^2+5s+5 \end{bmatrix}\right) = 100s^6 + 260s^5 + 544s^4 + 652s^3 + 484s^2 + 280s + 80
$$

Solution:

To solve this problem, we will need to do the following:

1. Find the forces acting on M_1 by displacing it by $x_1(t)$ and holding all the other masses still in the Laplace domain.
2. Use the superposition principle to include the forces acting on M_1 by M_2 and M_3 in the Laplace domain.
3. Create an equation for M_1 representing all the forces acting on it.
4. Repeat steps 1) to 3) for M_2 and M_3.
5. Put all equations into matrix form.
6. Solve for $X_3(s)$ using Cramer's rule.

(III) Find the forces acting on M_1 by moving it and all other masses still in the Laplace domain.

Looking at the diagram, moving M_1 by some displacement $x_1(t)$ in the direction indicated, M_1 experiences the following forces:

1. The force resisting motion due to M_1's mass (represented by $s^2 M_1 X_1(s)$ in the Laplace domain).
2. The force of friction with M_3 ($f_{v_1} s X_1(s)$).
3. The force of the viscous damper ($f_{v_2} s X_1(s)$).
4. The force of the spring with spring constant K_2 ($K_2 X_1(s)$).
5. The force of the spring with spring constant K_3 ($K_3 X_1(s)$).

In free body diagram (FBD) form, this looks like:

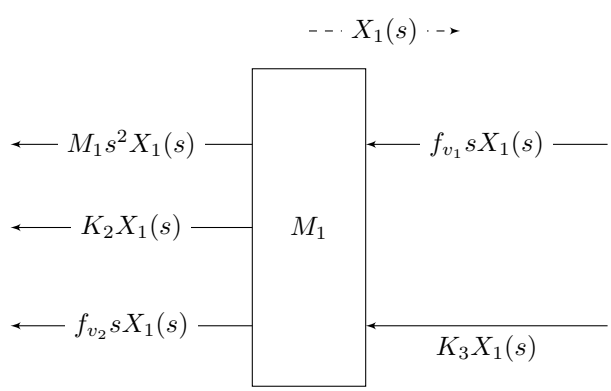

(IV) Include the forces acting on M_1 by moving M_2 and M_3 in the Laplace domain.

By inspection and use of Newton's second law of motion, we can see that displacing M_2 and M_3 by $X_2(s)$ and $X_3(s)$ respectively, we obtain the following FBD of M_1:

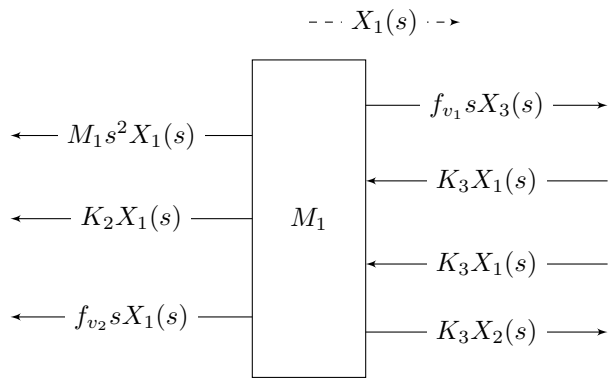

(V) Express all forces acting on M_1 as an equation.

Now, we know all net forces on an object must equal 0 (forces acting to the right equals forces acting to the left). So:

$$\begin{aligned}
& M_1 s^2 X_1(s) + K_2 X_1(s) + f_{v_1} s X_1(s) + f_{v_2} s X_1(s) + K_3 X_1(s) = && K_2 X_2(s) + f_{v_1} s X_3(s) \\
\implies & (M_1 s^2 + K_2 + f_{v_1} s + f_{v_2} s + K_3) X_1(s) = && K_2 X_2(s) + f_{v_1} s X_3(s) + \\
\implies & (M_1 s^2 + K_2 + K_3 + (f_{v_1} + f_{v_3}) s) X_1(s) - K_2 X_2(s) - (f_{v_1} s) X_3(s) = && 0
\end{aligned}$$

And by substituting for the values given, we arrive at our first equation:

$$\begin{aligned}
& (4s^2 + 4 + 4 + (2+2)s) X_1(s) - 4X_2(s) - 2sX_3(s) = && 0 \\
\implies & (4s^2 + 4s + 8) X_1(s) - 4X_2(s) - 2sX_3(s) = && 0 \quad \ldots (1)
\end{aligned}$$

(VI) Do the same for M_2 and M_3.

As before, examining the diagram gives the following FBDs for M_2 and M_3 (holding all other masses still):

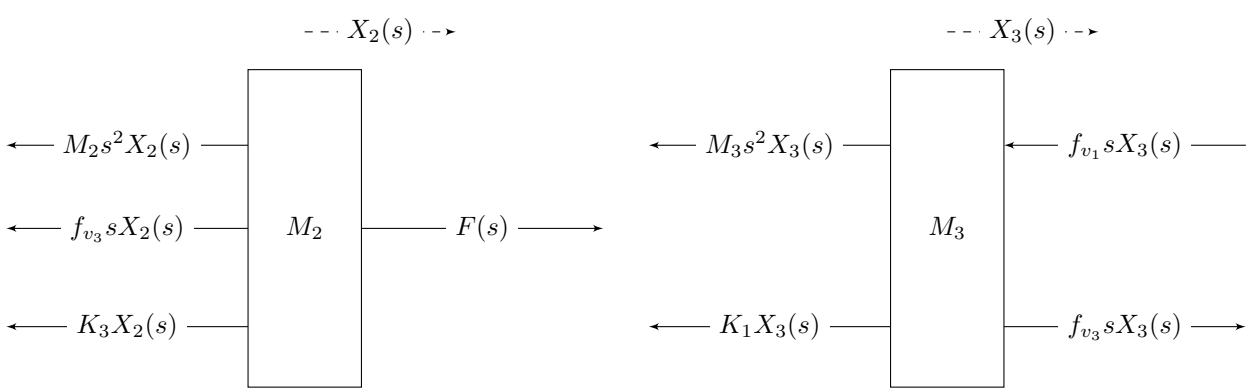

And by including the forces on M_2 by moving M_1, M_3, and the forces on M_3 by moving M_1, M_2, we get:

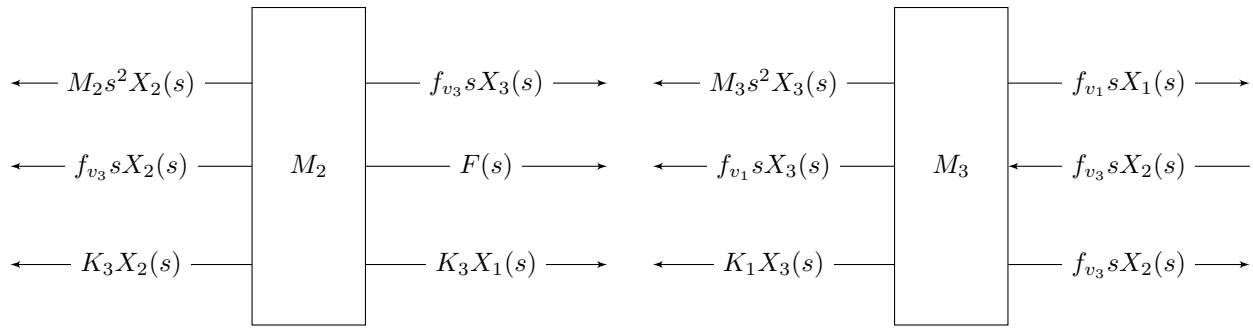

We can express both FBDs in equation form as follows. For M_2:

$$\begin{aligned}
& M_2s^2X_2(s) + f_{v_3}sX_2(s) + K_3X_2(s) = && f_{v_3}sX_3(s) + F(s) + K_3X_1(s) \\
\implies & (M_2s^2 + f_{v_3}s + K_2)X_2(s) = && f_{v_3}sX_3(s) + F(s) + K_3X_1(s) \\
\implies & -K_3X_1(s) + (M_2s^2 + f_{v_2}s + K_2)X_2(s) - f_{v_3}sX_3(s) = && F(s)
\end{aligned}$$

And for M_3:

$$\begin{aligned}
& M_3s^2X_3(s) + f_{v_1}sX_3(s) + f_{v_3}sX_3(s) + K_1X_3(s) = && f_{v_1}sX_1(s) + f_{v_2}sX_2(s) \\
\implies & (M_3s^2 + (f_{v_1} + f_{v_3})\,s + K_1)X_3(s) = && f_{v_1}sX_1(s) + f_{v_2}sX_2(s) \\
\implies & -f_{v_1}sX_1(s) - f_{v_2}sX_2(s) + (M_3s^2 + (f_{v_1} + f_{v_3})\,s + K_1)X_3(s) = && 0
\end{aligned}$$

And by substituting for the values we're given, we obtain the last two equations we need:

$$\begin{aligned}
-4X_1(s) + (5s^2 + 3s + 4)X_2(s) - 3sX_3(s) = F(s) \quad \ldots(2) \\
-2sX_1(s) - 3sX_2(s) + (5s^2 + 5s + 5)X_3(s) = 0 \quad \ldots(3)
\end{aligned}$$

(VII) Express equations in matrix form.

Putting equations (1), (2), and (3) in matrix form, we have that:

$$\begin{bmatrix} 4s^2 + 4s + 8 & -4 & -2s \\ -4 & 5s^2 + 3s + 4 & -3s \\ -2s & -3s & 5s^2 + 5s + 5 \end{bmatrix} \begin{bmatrix} X_1(s) \\ X_2(s) \\ X_3(s) \end{bmatrix} = \begin{bmatrix} 0 \\ F(s) \\ 0 \end{bmatrix}$$

(VIII) Solve for $X_3(s)$ using Cramer's rule.

Cramer's rule tells us that:

$$X_3(s) = \frac{\det(A_3)}{\det(A)}$$

Where:

$$A = \begin{bmatrix} 4s^2+4s+8 & -4 & -2s \\ -4 & 5s^2+3s+4 & -3s \\ -2s & -3s & 5s^2+5s+5 \end{bmatrix} \quad \text{(the matrix multiplying } \begin{bmatrix} X_1(s) \\ X_2(s) \\ X_3(s) \end{bmatrix}\text{)}$$

And:

$$A_3 = \begin{bmatrix} 4s^2+4s+8 & -4 & 0 \\ -4 & 5s^2+3s+4 & F(s) \\ -2s & -3s & 0 \end{bmatrix} \quad \text{(the result of swapping the third column of } A \text{ with } \begin{bmatrix} 0 \\ F(s) \\ 0 \end{bmatrix}\text{)}$$

It's given in the question that:

$$\det(A) = 100s^6 + 260s^5 + 544s^4 + 652s^3 + 484s^2 + 280s + 80$$

So, we need only find $\det(A_3)$, which, by expanding along the third column for ease of calculation, is given by:

$$\begin{aligned} \det(A_3) &= (-1)^{3+1}(0)\left((-4)(-3s) - (5s^2+3s+4)(-2s)\right) \\ &\quad + (-1)^{3+2}F(s)\left((4s^2+4s+8)(-3s) - (-4)(-2s)\right) \\ &\quad + (-1)^{3+3}(0)\left((4s^2+4s+8)(5s^2+3s+4) - (-4)(-4)\right) \\ &= -(12s^3+12s^2+32s)F(s) \end{aligned}$$

Therefore:

$$X_3 = \frac{\det(A_3)}{\det(A)} = \frac{-(12s^3+12s^2+32s)F(s)}{100s^6+260s^5+544s^4+652s^3+484s^2+280s+80}$$

Thus, $G(s)$ is given by:

$$\frac{X_3(s)}{F(s)} = \frac{-(12s^3+12s^2+32s)F(s)}{100s^6+260s^5+544s^4+652s^3+484s^2+280s+80} \div F(s)$$

$$= \frac{-(12s^3+12s^2+32s)}{100s^6+260s^5+544s^4+652s^3+484s^2+280s+80}$$