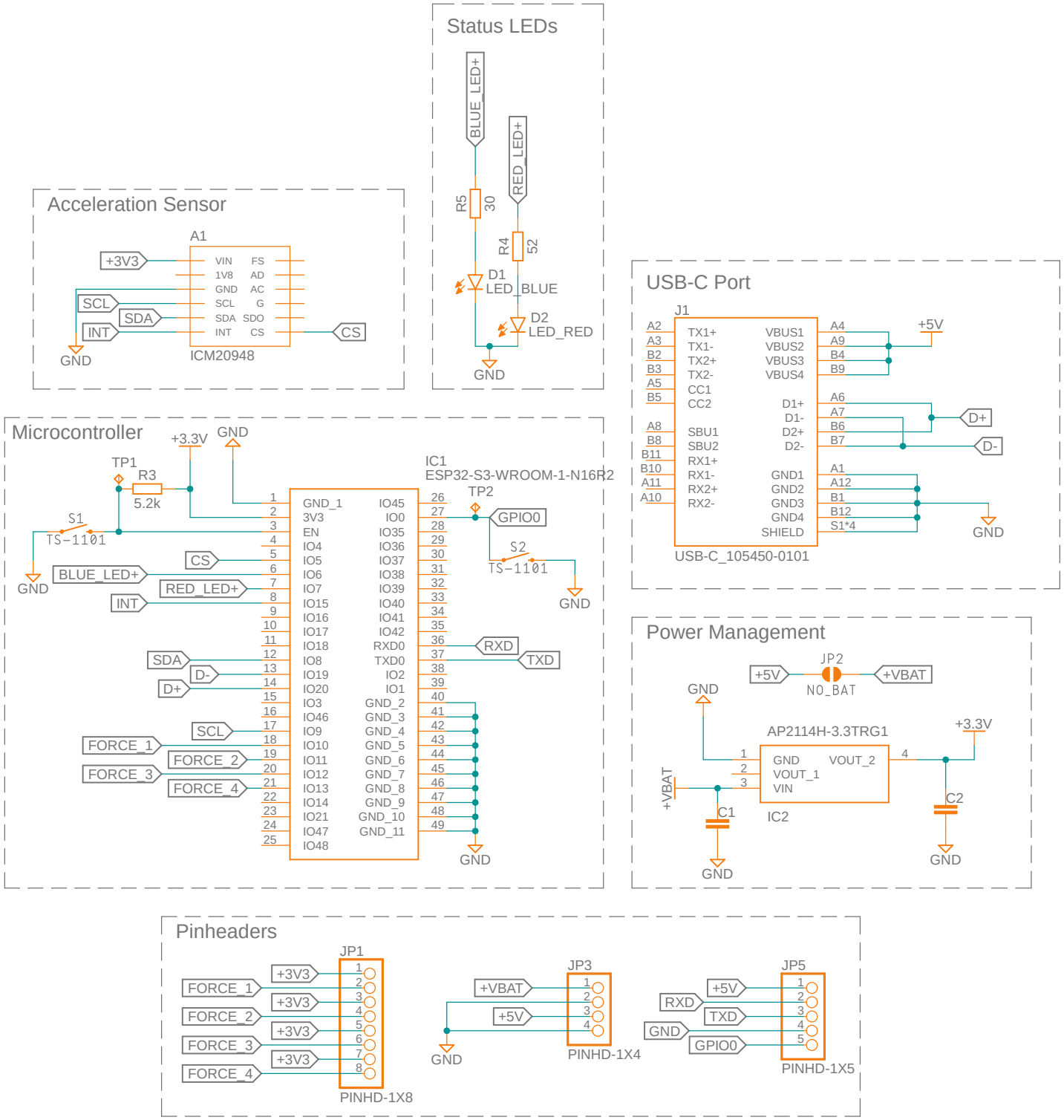

27/01/2024 15.41 (Sheet: 1/1)