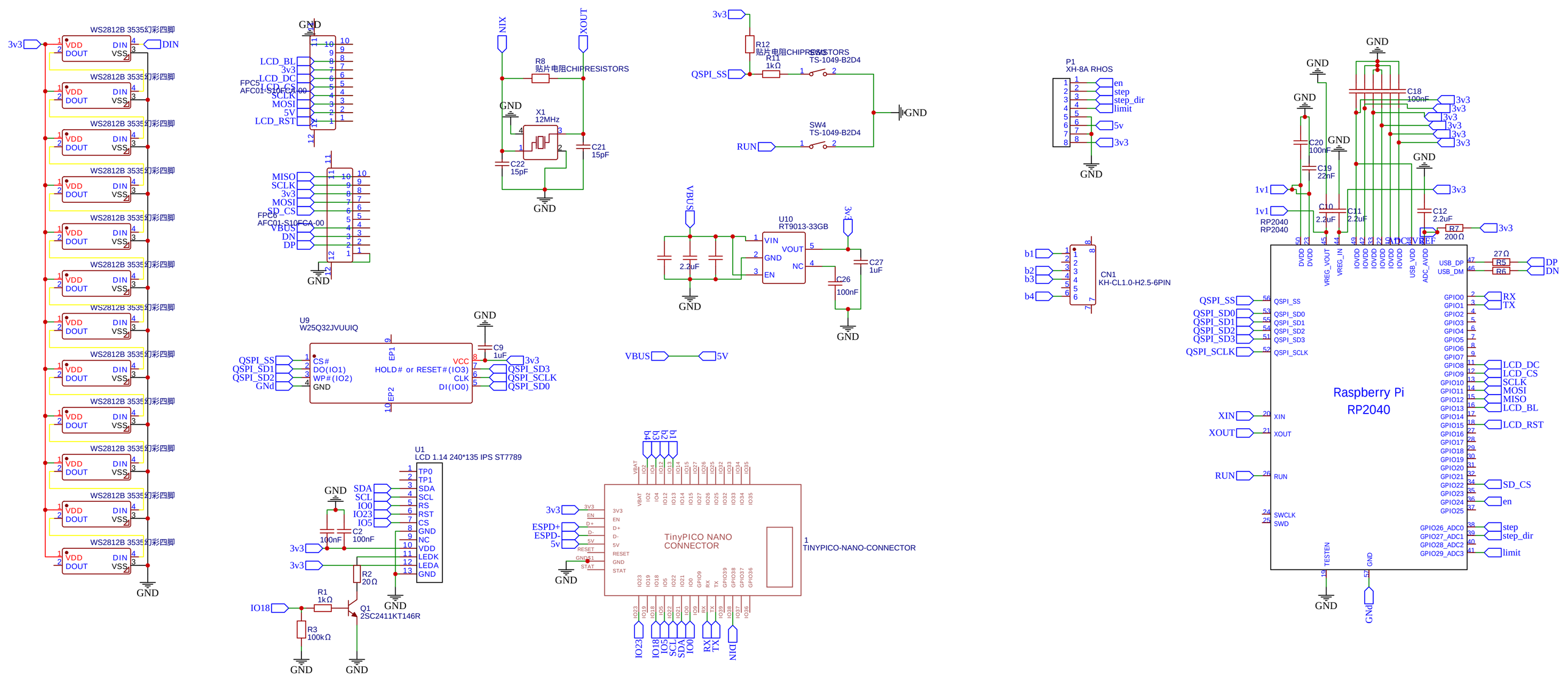
WS2812B 3535幻彩四脚
VDD
DIN
DOUT
VSS
3v3
DIN
GND
FPC5
AFC01-S10FCA-00
LCD_BL
3v3
LCD_DC
LCD_CS
SCLK
MOSI
5V
LCD_RST
FPC6
AFC01-S10FCA-00
MISO
SCLK
3v3
MOSI
SD_CS
VBUS
DN
DP
NIX
XOUT
R8
贴片电阻CHIPRESISTORS
X1
12MHz
C21
15pF
C22
15pF
3v3
R12
贴片电阻CHIPRESISTORS
R11
1kΩ
QSPI_SS
SW3
TS-1049-B2D4
SW4
TS-1049-B2D4
RUN
P1
XH-8A RHOS
en
step
step_dir
limit
5v
3v3
VBUS
2.2uF
U10
RT9013-33GB
VIN
VOUT
GND
NC
EN
C27
1uF
C26
100nF
VBUS
5V
b1
b2
b3
b4
CN1
KH-CL1.0-H2.5-6PIN
U9
W25Q32JVUUIQ
CS#
DO(IO1)
WP#(IO2)
GND
HOLD# or RESET#(IO3)
CLK
DI(IO0)
VCC
EP1
EP2
C9
1uF
QSPI_SS
QSPI_SD1
QSPI_SD2
GNd
QSPI_SD3
QSPI_SCLK
QSPI_SD0
U1
LCD 1.14 240*135 IPS ST7789
TP0
TP1
SDA
SCL
RS
RST
CS
GND
NC
VDD
LEDK
LEDA
SDA
SCL
IO0
IO23
IO5
C2
100nF
R2
20Ω
R1
1kΩ
R3
100kΩ
IO18
Q1
2SC2411KT146R
3v3
ESPD+
ESPD-
5v
TinyPICO NANO
CONNECTOR
1
TINYPICO-NANO-CONNECTOR
IO23
IO18
IO5
SCL
SDA
IO0
RX
TX
DIN
C18
100nF
C20
100nF
C19
22nF
1v1
RP2040
C10
2.2uF
C11
2.2uF
C12
2.2uF
R7
200Ω
ADC_VREF
27Ω
R5
R6
USB_DP
USB_DM
DP
DN
DVDD
VREG_VOUT
VREG_IN
IOVDD
USB_VDD
ADC_AVDD
QSPI_SS
QSPI_SD0
QSPI_SD1
QSPI_SD2
QSPI_SD3
QSPI_SCLK
XIN
XOUT
RUN
SWCLK
SWD
TESTEN
GND
GPIO0
GPIO1
GPIO2
GPIO3
GPIO4
GPIO5
GPIO6
GPIO7
GPIO8
GPIO9
GPIO10
GPIO11
GPIO12
GPIO13
GPIO14
GPIO15
GPIO16
GPIO17
GPIO18
GPIO19
GPIO20
GPIO21
GPIO22
GPIO23
GPIO24
GPIO25
GPIO26_ADC0
GPIO27_ADC1
GPIO28_ADC2
GPIO29_ADC3
RX
TX
LCD_DC
LCD_CS
SCLK
MOSI
MISO
LCD_BL
LCD_RST
SD_CS
en
step
step_dir
limit
Raspberry Pi
RP2040

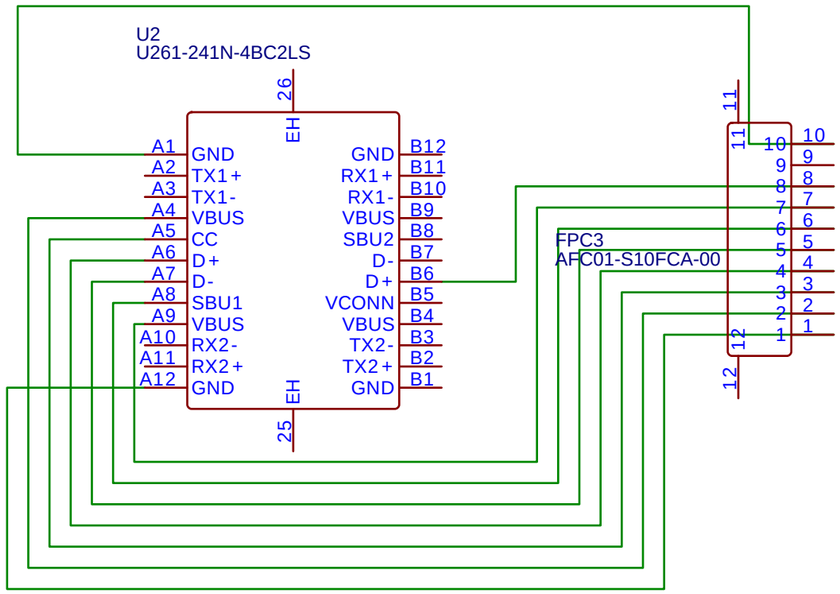

TITLE: Sheet_1		REV: 1.0
嘉立创EDA	Company: Your Company	Sheet: 1/1
	Date: 2022-11-14 Drawn By: kantheti vamsi krishana varma	

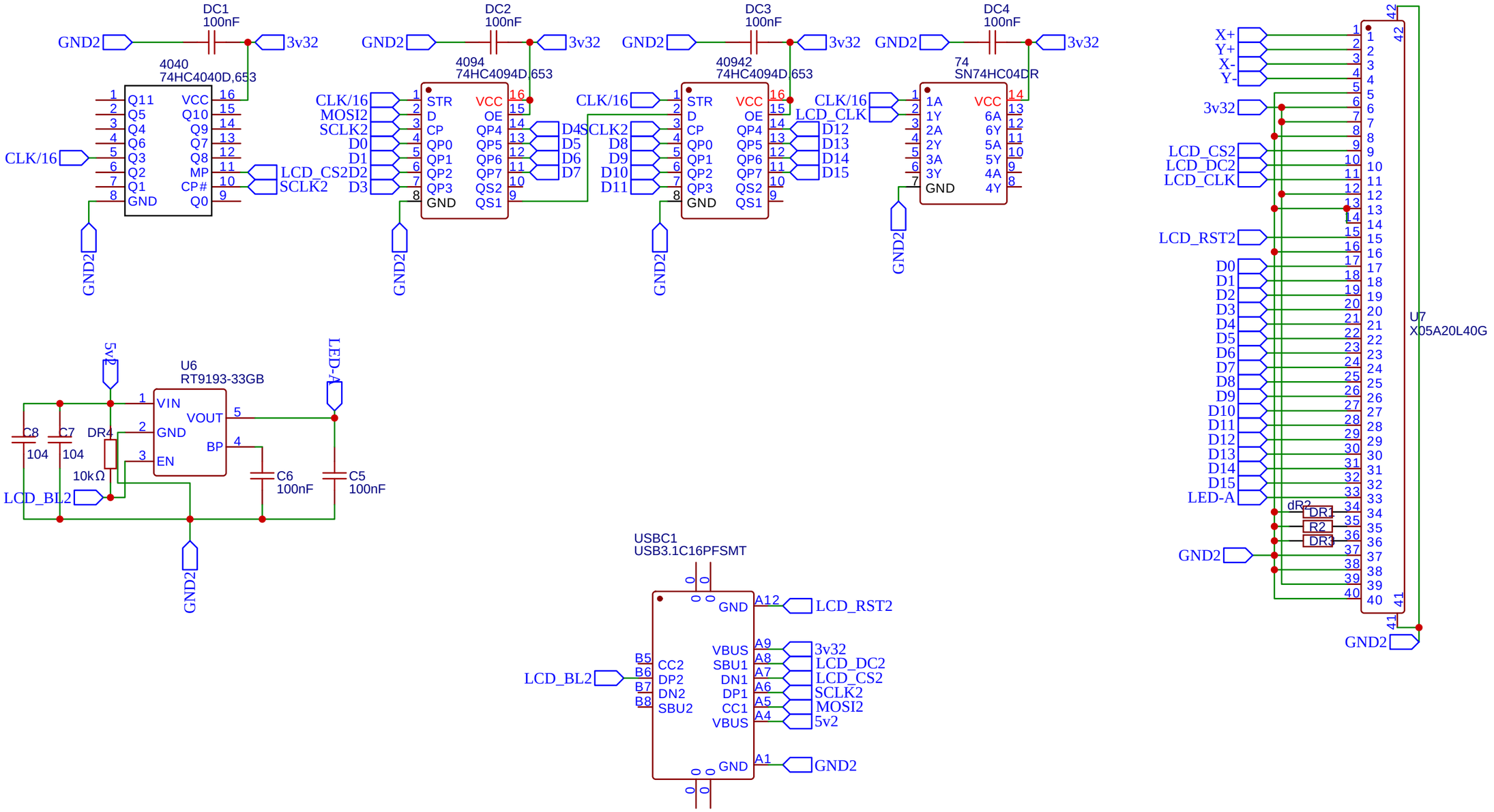

TITLE: Sheet_1		REV: 1.0
嘉立创EDA	Company: Your Company	Sheet: 1/1
	Date: 2022-11-11 Drawn By: kantheti vamsi krishana varma	

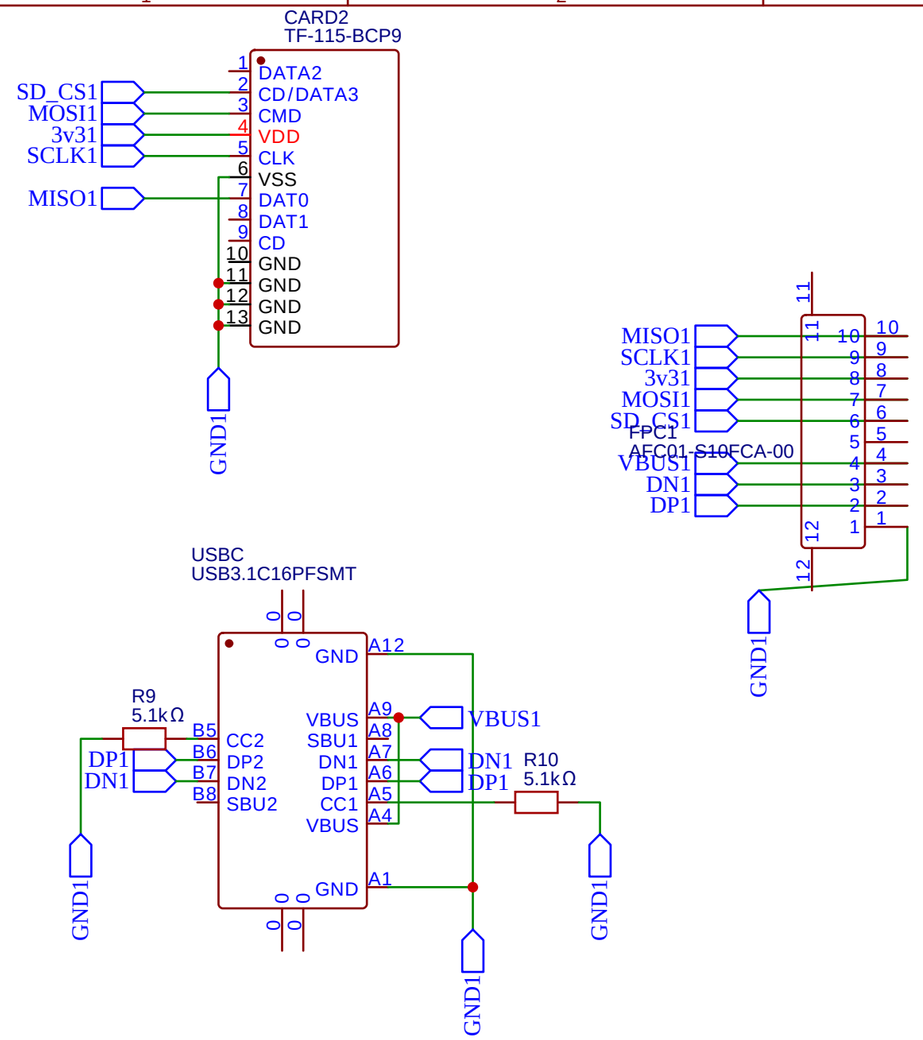

TITLE: Sheet_1		REV: 1.0
嘉立创EDA	Company: Your Company	Sheet: 1/1
	Date: 2022-11-14 Drawn By: kantheti vamsi krishana varma	