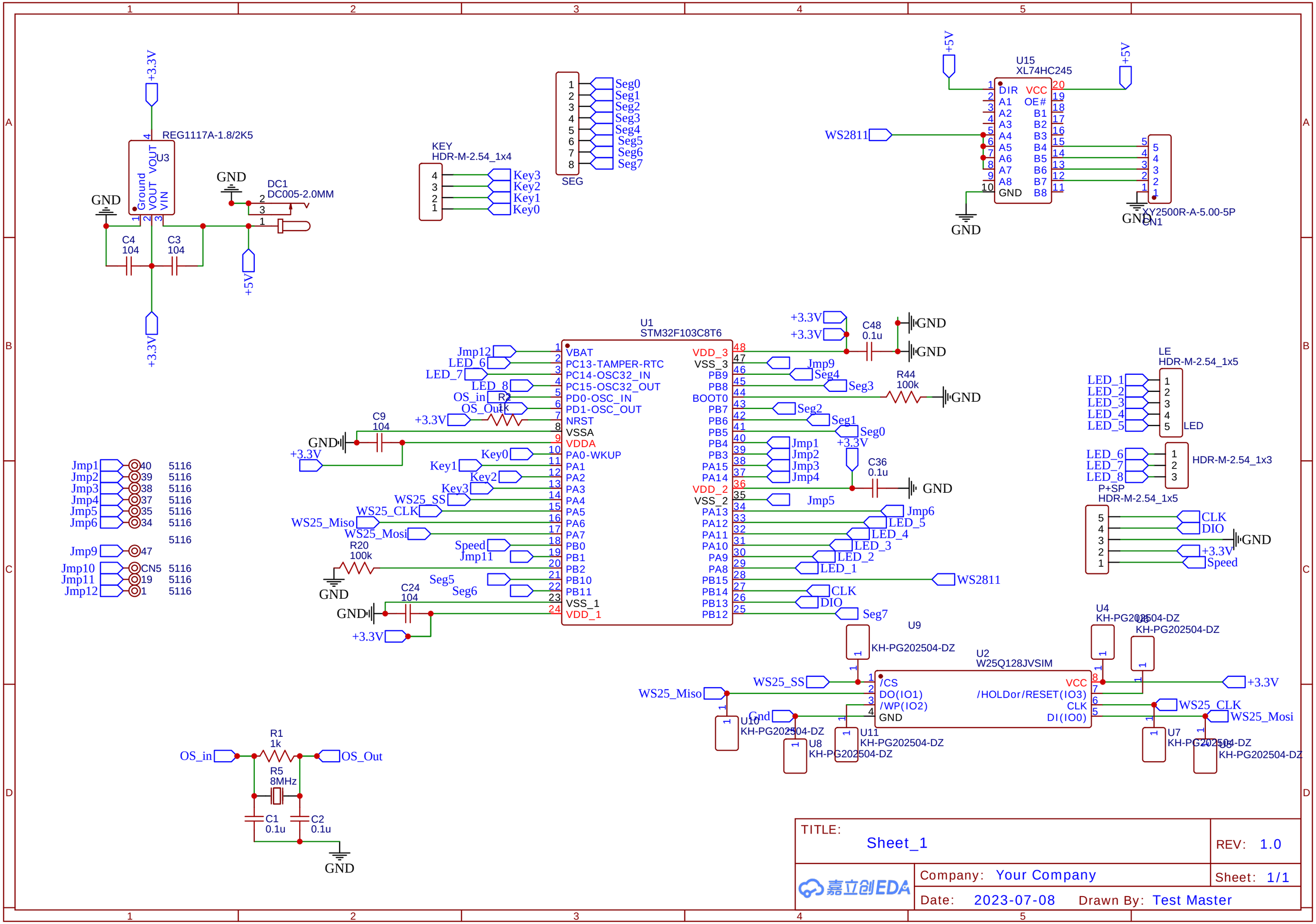
REG1117A-1.8/2K5
U3
Ground
VOUT
VIN
+3.3V
GND
C4
104
C3
104
DC1
DC005-2.0MM
+5V
KEY
HDR-M-2.54_1x4
Key3
Key2
Key1
Key0
SEG
Seg0
Seg1
Seg2
Seg3
Seg4
Seg5
Seg6
Seg7
U15
XL74HC245
DIR
VCC
A1
OE#
A2
B1
A3
B2
A4
B3
A5
B4
A6
B5
A7
B6
A8
B7
GND
B8
WS2811
XY2500R-A-5.00-5P
CN1
U1
STM32F103C8T6
VBAT
PC13-TAMPER-RTC
PC14-OSC32_IN
PC15-OSC32_OUT
PD0-OSC_IN
PD1-OSC_OUT
NRST
VSSA
VDDA
PA0-WKUP
PA1
PA2
PA3
PA4
PA5
PA6
PA7
PB0
PB1
PB2
PB10
PB11
VSS_1
VDD_1
VDD_3
VSS_3
PB9
PB8
BOOT0
PB7
PB6
PB5
PB4
PB3
PA15
PA14
VDD_2
VSS_2
PA13
PA12
PA11
PA10
PA9
PA8
PB15
PB14
PB13
PB12
Jmp12
LED_6
LED_7
LED_8
OS_in
OS_Out
R2
1k
C9
104
Key0
Key1
Key2
Key3
WS25_SS
WS25_CLK
WS25_Miso
WS25_Mosi
Speed
Jmp11
R20
100k
Seg5
Seg6
C24
104
Jmp1
Jmp2
Jmp3
Jmp4
Jmp5
Jmp6
Jmp9
Jmp10
Jmp11
Jmp12
CN5
5116
C48
0.1u
Jmp9
Seg4
Seg3
R44
100k
Seg2
Seg1
Seg0
C36
0.1u
Jmp5
Jmp6
LED_5
LED_4
LED_3
LED_2
LED_1
CLK
DIO
Seg7
LE
HDR-M-2.54_1x5
LED_1
LED_2
LED_3
LED_4
LED_5
LED
HDR-M-2.54_1x3
LED_6
LED_7
LED_8
P+SP
HDR-M-2.54_1x5
CLK
DIO
Speed
U9
KH-PG202504-DZ
U2
W25Q128JVSIM
/CS
DO(IO1)
/WP(IO2)
GND
VCC
/HOLDor/RESET(IO3)
CLK
DI(IO0)
U4
KH-PG202504-DZ
U5
KH-PG202504-DZ
U10
KH-PG202504-DZ
U11
KH-PG202504-DZ
U8
KH-PG202504-DZ
U7
KH-PG202504-DZ
U6
KH-PG202504-DZ
R1
1k
R5
8MHz
C1
0.1u
C2
0.1u
TITLE:
Sheet_1
REV: 1.0
Company: Your Company
Sheet: 1/1
Date: 2023-07-08
Drawn By: Test Master