10.4 CLASSIFICATION OF CUTTING TOOLS

a) Depending upon the number of cutting edges the cutting tools used in metal cutting are classified as follows:

(i) Single point cutting tool

(ii) Multi point cutting tool

10.4.1 Single Point Cutting Tool

This type of tool has a effective cutting edge and removes excess material from the work piece along the cutting edge. Single point cutting tool is of the following types.

(a) Ground type (b) Forged type (c) Tipped type (d) Bit type

In ground type the cutting edge is formed by grinding the end of a piece of tool steel stock. Whereas in forged type the cutting edge is formed by rough forging before hardening and grinding. In tipped type cutting tool the cutting edge is in the form of a small tip made of high grade material which is welded to a shank made up of lower grade material. In bit type, a high grade material of a square, rectangular or some other shape is held mechanically in a tool holder. Single point tools are commonly used in lathes, shapers, planers, boring machines and slotters.

Single point cutting tool may be left handed or right handed type. A tool is said to be right/left hand type if the cutting edge is on the right or left side when viewing tool from the point end lathe tools, shaper tools, planner tools and boring tools are single point tools.

10.4.2 Multi Point Cutting Tool

Having more than are cutting edge. Milling cutters, drills, broaches, grinding wheel are multipoint cutting tools.

b) Cutting tools can also be classified according to the motions as:

i) Linear motion: Lathe, boring, broaching, planing, shaping tools etc.

ii) Rotary motion tools : Milling cutter, grinding wheels etc.

iii) Linear and rotary tool: Drills, honing tool, boring heads etc.

10.5 TOOL GEOMETRY

The desirability of getting the maximum use from a tool before it needs regrinding is one of the objectives of tool technology. Tool life is defiend as the length of time, a tool will operate before its failure occurs. There are many factors that contribute to cutting tool efficiency. Among the most important of these are the following:

(i) The shape of the cutting edge that removes the excess metal.

(ii) The correct selection of the type of cutting tool for the material to be machined.

(iii) The correct choice of cutting speed and feed.

(iv) The proper setting of cutting tool relative to work.

(v) The correct choice and proper application of coolants.

Unless the cutting tools are ground to the correct shape with correct angles, and unless it is ground with a keen, smooth cuting edge, time will be wasted, accuracy will be impossible and a poor finish will result.

OPTIMUM TOOL GEOMETRY depends upon the following factors:

(i) Workpiece material

(ii) Machining variables

(a) Cutting speed

(b) Feed

(c) Depth of cut

(iii) Material of the tool point.

(iv) Type of cutting

Tool geometry refers to the tool angle, shape of tool face and form of the cutting edges. Figure (10.7) shows a typical single point tool. The most important features are the cutting edges and adjacent surfaces.

(i) Properties of material cut especially ductility

(ii) Depth of cut

(iii) Effective rake angle of tool

(iv) Cutting speed

(v) Type and quantity of cutting fluid

Factors like surface finish of tool faces, coefficient of frictions between tool and chip, and temperature reached in the region of cutting also have some influence on chip formation but are generally less significant as compared to variables listed above.

10.7.1 Types of chip

Chips formed during metal cutting are as follows:

Historically, Ernst classified three different types of chips.

TYPE: I (i) Discontinuous chip

TYPE: II (ii) Continuous chip or ribbon type chips

TYPE: III (iii) Continuous chip with bult up edge (BUE)

Loladze classified chips into different types.

TYPE: I Irregular-shaped chips

TYPE: II Continuous chips

TYPE: IIA No-built up edge

TYPE: IIB With BUE

TYPE: III Elements chips

TYPE: IV Joined chips or partially continuous chips

10.7.1.1 Discontinuous Chip

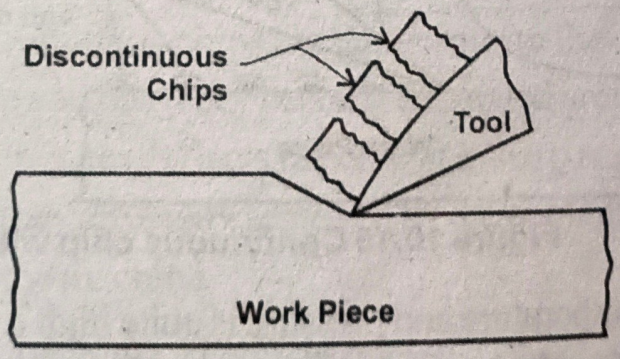

Figure 10.13 Discontinuous chip

Brittle materials such as grey cast iron, lack of the ductility necessary for appreciable plastic chip formation. Consequently the compresed material ahead of tool fails in a brittle

manner along the shear zone producing small fragments. Such chips are called discontinuous chips. (Figure 10.13). Lower cutting speeds and insufficient rake angle cause the formation of such chip.

10.7.1.2 Continuous Chip or Ribbon Type Chips

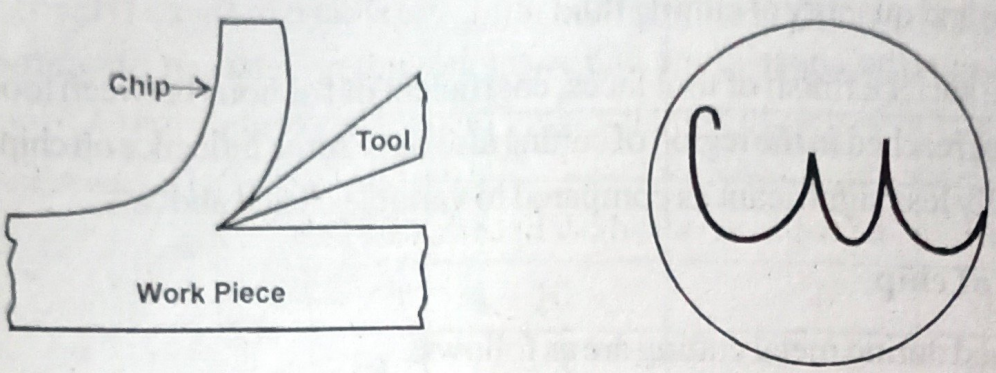

Figure 10.14 Continuous Chip or Ribbon Type Chips

A continuous chip is obtained when cutting ductile materials such as low carbon steel, aluminium and copper. This chip is severely deformed and either comes off in the form of a long string, or curl into a tight roll figure (10.14).

Some very soft and ductile material with a low strength tend to tear away from the parent metal of the work piece rather than shear clearly. This results in a rough surface that has to be cleaned up by a very keen cutting edge. In additio to ductile work piece material the other conditions which favour their formation are fine feed, sharp cutting edge, higher cutting speeds and larger rake angles.

10.7.1.3 Continuous Chips with BUE

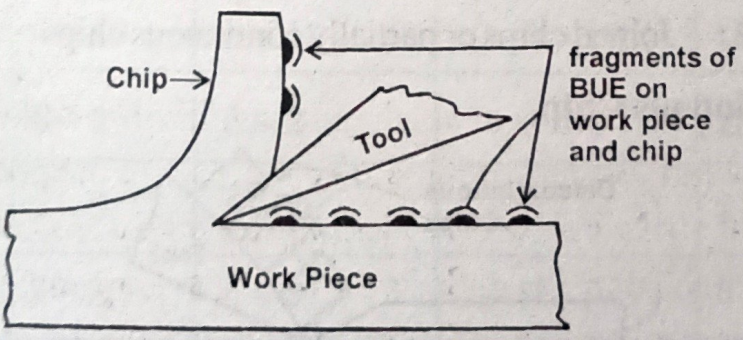

Figure 10.15 Continuous chip with BUE

During cutting, the temperature and pressure is quite high it causes the chip material to weld itself to the tool face near the nose figure (10.15). This is called "BUE". This accumulated build up of chip material which then break away, part adhereing to underside of the chip and part of the work piece.

This process gives rise to a poor finish on the machined surface and accelerated wear on the tool face. High friction at tool face, coarse feed, low rake angle and ineffective use of cutting fluid produce such chips.

10.7.1.4 Areas in Metal Cutting

The important areas of interest in metal cutting are shown in figure (10.16). First area (A_1) extends along the shear plane and is the boundary between the deformed and undeformed material or the chip and the work piece. The second area (A_2) includes the interface between the chip and the tool face while the third area (A_3) includes the finished or machined surface and the material adjacent to that surface.

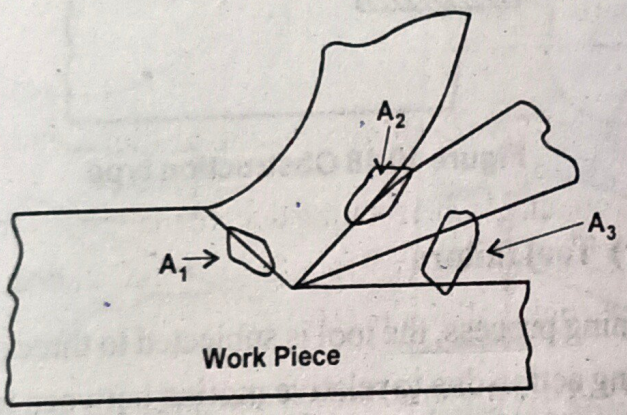

Figure 10.16

The important aspect in the first area (A_1) is the plastic deformation characteristics of the material cut, whereas is second area (A_2) the friction and wear characteristics of the tool work piece combination, and the important aspect in third area (A_3) is the surface roughness produced and the residual stresses involved in the surface constituting the area.

10.8 CHIP BREAKERS

Chip breakers are provided to control the continuous ribbon-like chips that are formed at high cutting speeds. Continuous chips are dangerous to the operator of the machine. These chips are hard, sharp and hot. They become entangled around the revolving job and the cutting tool. The chip breaker deflects the chip at a sharp angle and causes it to break into small pieces. So that they are easily removed by the coolant or air or simply allowed to fall into the chip pan of the machine.

There are basically two types of chip breakers:

(i) Groove type

(ii) Obstruction type

DESCRIPTION	SYMBOL	DESCRIPTION	SYMBOL
Twin disk clutches	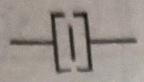	*Brakes:* Cone	
Single-direction overrunning clutches	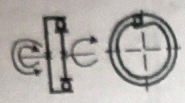	Shoe	
Two-direction overrunning clutches	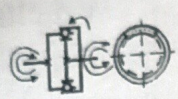	Band	
		Disk	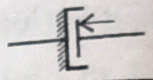

1.2 LATHE (Turning Machines)

1.2.1 Introduction

A lathe is the father of all machine tools. It is a basic machine tool, probabaly the most important one of all. lathe was actually the first machine tool.

— Lathe is a particular type of machine tool in which the work is held and rotated against a suitable cutting tool for the purpose producing surface of revolution in any material.

— The main function of a lathe is to remove metal in the form of chips from a workpiece to give it the required shape and size. Generally, single point tool is used as the cutting tool. The tool material should be harder and stronger than the workpiece material.

1.2.2 Description and functions of lathe parts

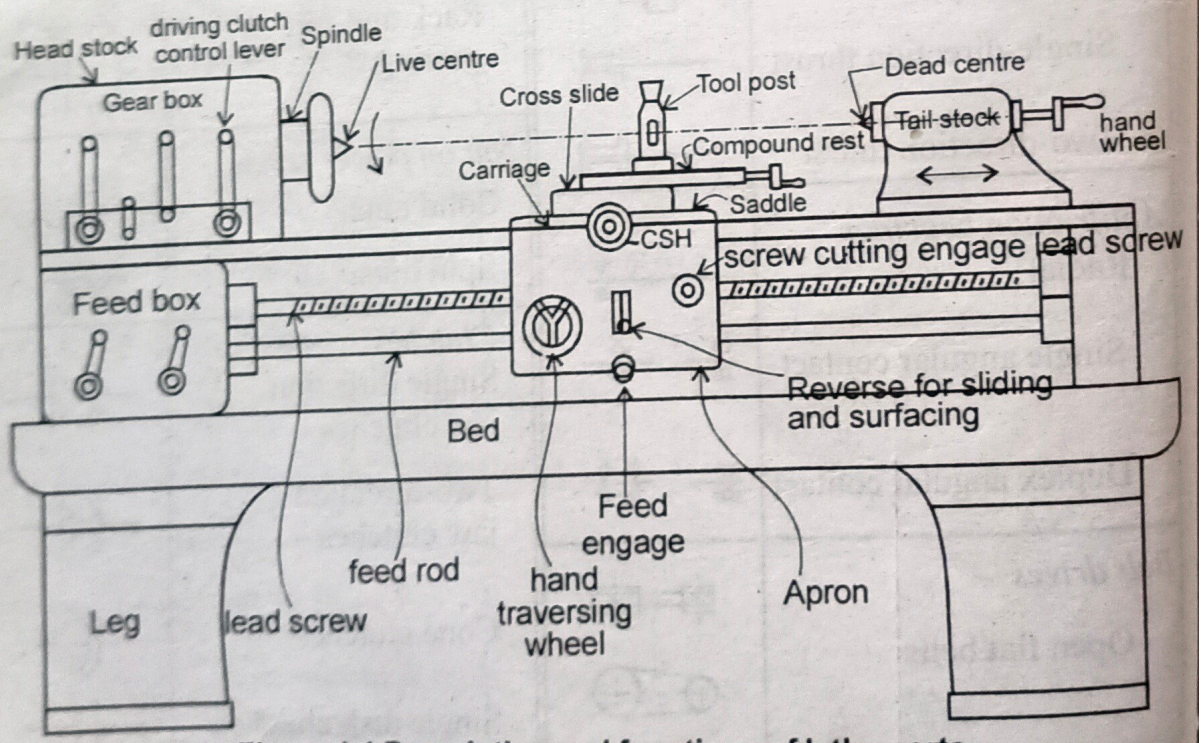

Figure 1.1 Description and functions of lathe parts

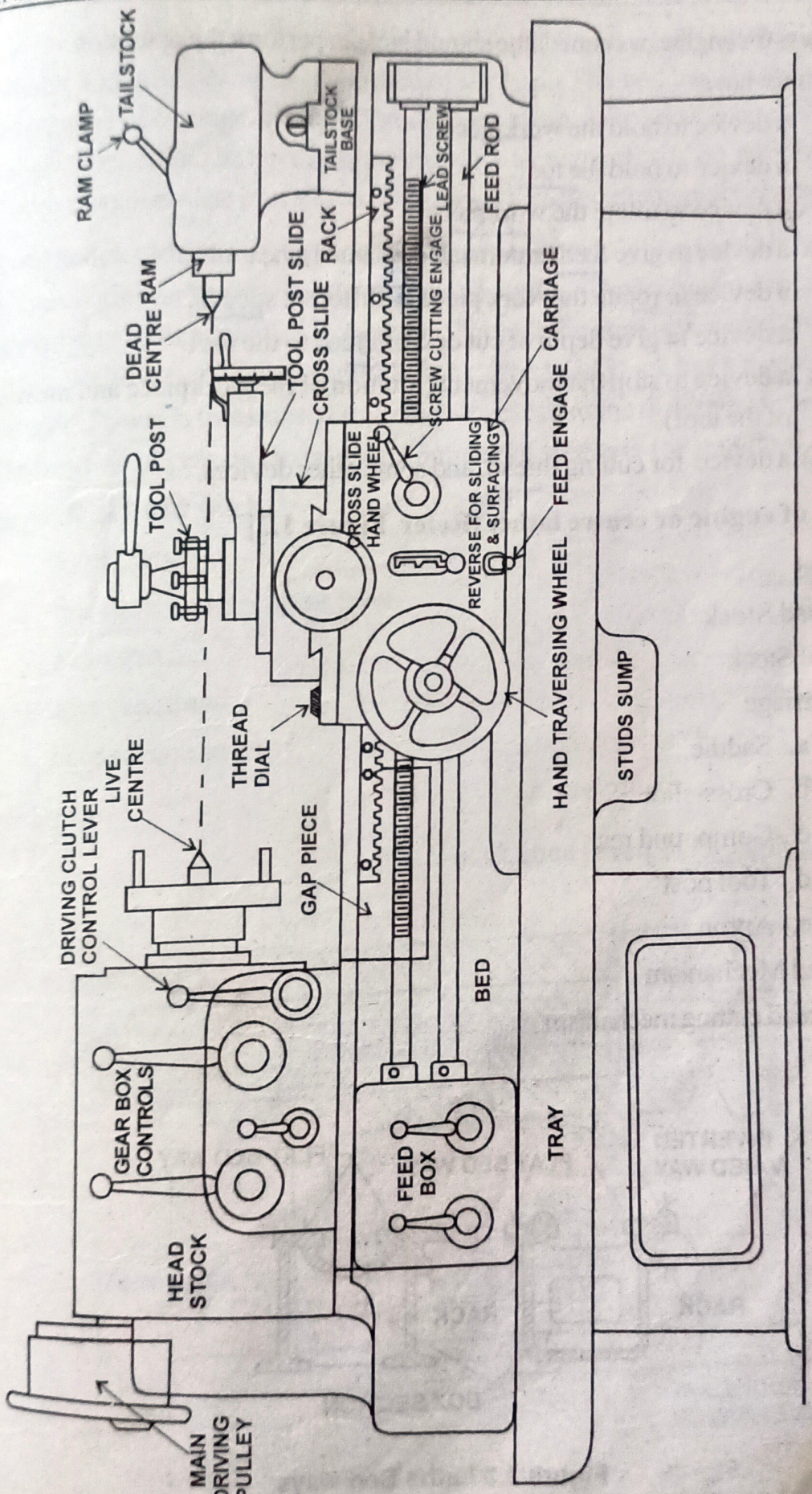

Figure 1.2 Lathe Parts

Principal parts for engine or centre lathe should have to perform the operation.

A Lathe must have:

i) a device to hold the workpiece.
ii) a device to hold the tool.
iii) a device to rotate the workpiece.
iv) a device to give feed (automatic or manual) the tool.
v) a device to rotate the work piece ~~or~~ at different speeds.
vi) a device to give depth of cut or cross feed to the tool.
vii) a device to stop the movement (rotation of the workpiece and movement of the tool).
viii) a device for cutting thread, and some other devices.

1.2.3 Parts of engine or centre lathe: [Refer Figure 1.2]

1. Bed
2. Head Stock
3. Tail Stock
4. Carriage
   a. Saddle
   b. Cross-slide
   c. Compound rest
   d. Tool post
   e. Apron
5. Feed Mechanism
6. Thread cutting mechanism

1. Bed:

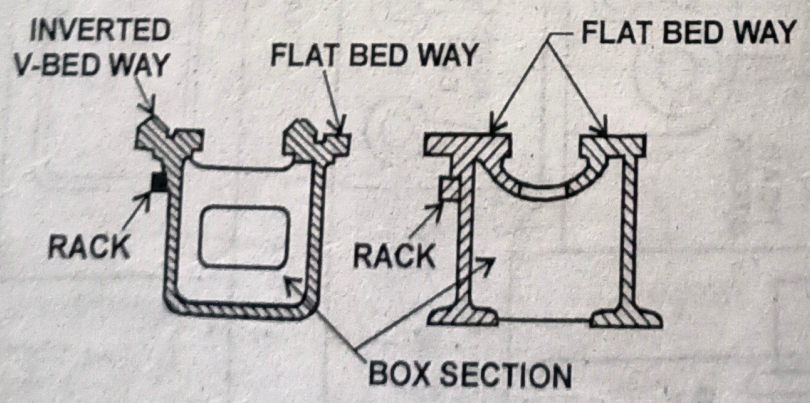

Figure 1.3 Lathe Bed ways

It is the base of the lathe The head stock is mounted on the left end, the carriage in the middle and tailstock at the right end of the bed. The bed has flat or inverted 'V' sideways. The carriage and the tailstock move along the guideways over the bed. The bed material should be have high compressive strength, should be wear resistant and absorb vibration. Cast iron alloyed with nickel and chromium material is suitable.

2. **Head Stock :** Made of carbon on nickel chrome steel. It is carries a hallow spindle. A live centre can be fitted into the hollow spindle. The live centre rotates with the workpiece and hence called live centre. The spindle nose is threaded chucks or face plates can be attached to the spindle nose. The head stock has a a gear box (speed changer). Power is transmitted from the headstock to the different parts of the lathe. The function of gear box to provide a number of speeds to the spindle.

Main parts of head stock:

1. Conepulley
2. Backgear and Backgear lever
3. Main spindle
4. Live centre and
5. Feed reverse lever

3. Tail Stock:

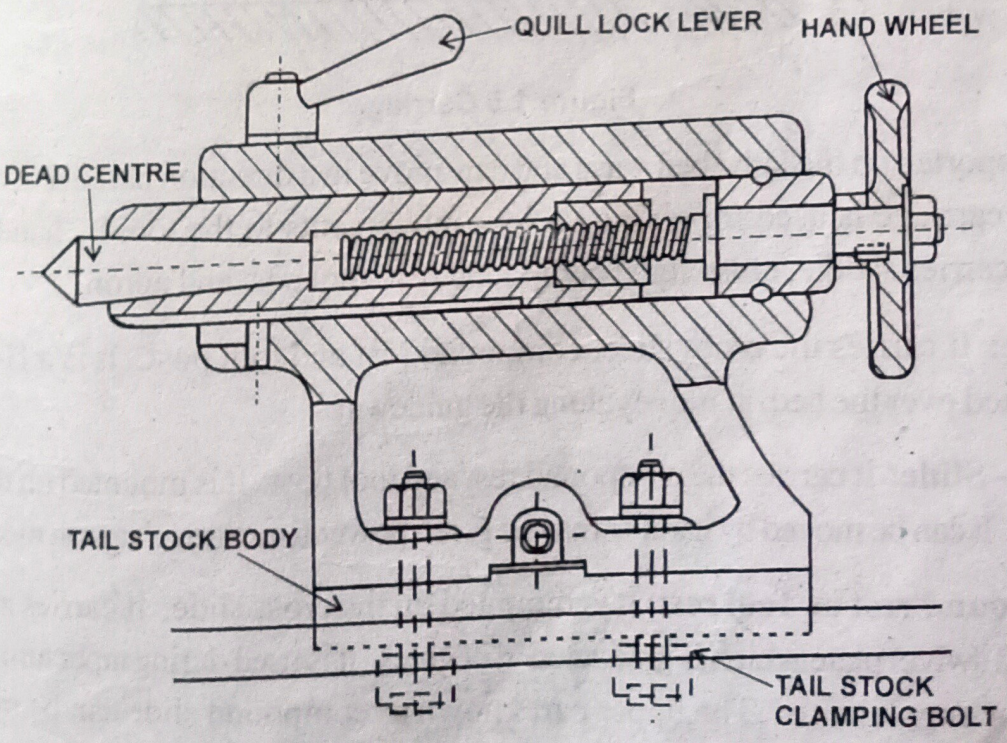

Figure 1.4 Tail Stock

It is mounted on the bed at the right end. It is used for supporting the right end of the workpiece by means of a dead centre. The dead centre does not revolve with the workpiece and hence called dead centre. However, it can be moved axially by means of a hand wheel. Tail stock can be moved along the bed for supporting different length of workpieces and clamped at any position. The tailstock is also used for holding drill and reamer for drilling and reaming tapping operations.

4. Carriage:

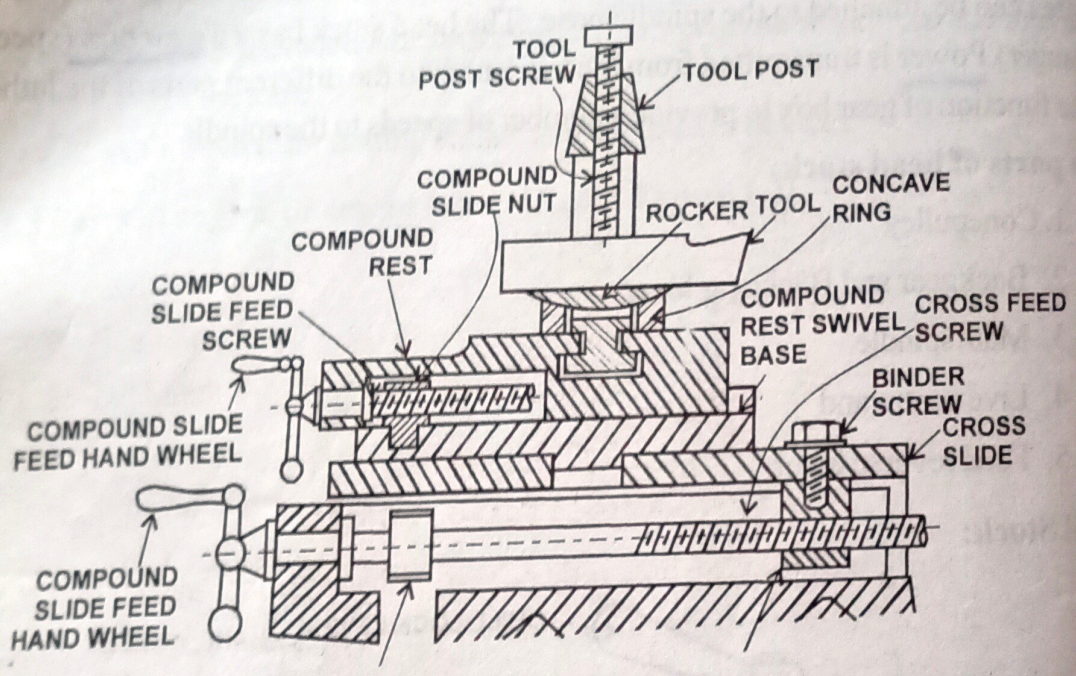

Figure 1.5 Carriage

It is supported on the lathe bed ways and can move in a direction parallel to the lathe axis. The carriage is used for giving various movements to the tool by hand and by power. It carries saddle, cross slide, compound rest, tool post and apron.

a) Saddle: It carries the cross slide, compound rest and tool post. It is a H-Shaped casting fitted over the bed. It moves along the guideways.

b) Cross - Slide: It carries the compound rest and tool post. It is mounted on the top of the saddle. It can be moved by hand or may be given power feed through apron mechanism.

c) Compound rest or Tool rest: It is mounted on the cross slide. It carries a circular base called swivel plate which is graduated in degrees. It is used during taper turning to set the tool for angular cuts. The upper part known as compound slide can be moved by means of a hand wheel. .

d) **Tool Post:** The tool post is fitted over the compound rest. The tool is clamped is the tool post. The tool post is clamped in the tool post. The tool post is fitted over the compound rest.

There are four types of tool post.

1) Single screw tool post
2) Open side tool post
3) Four bolt tool post
4) Four way tool post

1) Single screw tool post

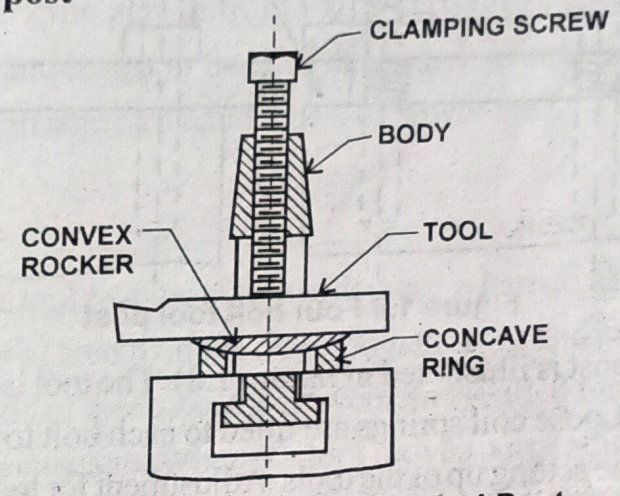

Figure 1.6 Single Screw Tool Post

The single screw tool post can hold only one tool. The tool is clamped by a clamping screw. The tools rest on the top flat surface of the convex rocker. The convex rocker has got a convex surface at its bottom. The convex rocker rests over a concave ring. This arrangement is used to adjust the height of the tool. Refer figure (1.6).

2) Open side tool post

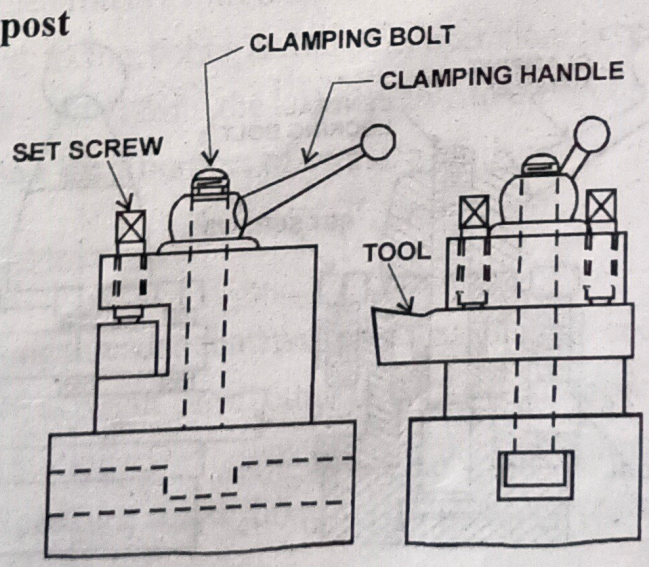

Figure 1.7 Open Side Tool Post

The open side tool post is shown in figure (1.7). The tool is held in position by two set screws. Parallel packing strips are used to adjust the height of the cutting point. The tool post can be tilted to any required position. This is done by loosening the clamping bolt. The clamping bolt is fitted in a T-slot. So the tool can be changed quickly.

3) Four bolt tool post:

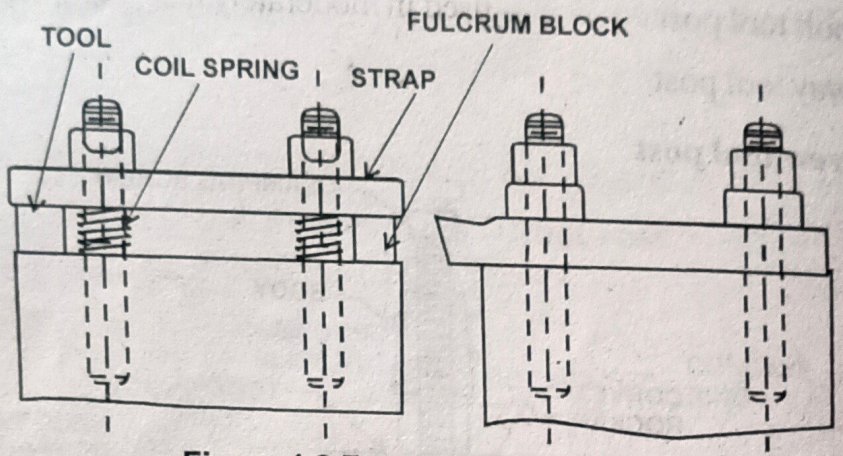

Figure 1.8 Four bolt tool post

The four bolt tool post is illustrated in figure (1.8). The tool is held in position by two straps and four bolts. Loose coil springs are fitted to each bolt to keep the straps in place and greatly facilitate the setting up of the tools. Adjustment for tool height can be made by using parallel packing strips under the tools.

This type forms a very firm support for either a single or double tool set-up. This is therefore, often fitted to heavy duty lathes. This type does not swivel in itself, and setting of the tool in any desired angle is effected by the adjustment of the compound slide.

4) Four way tool post:

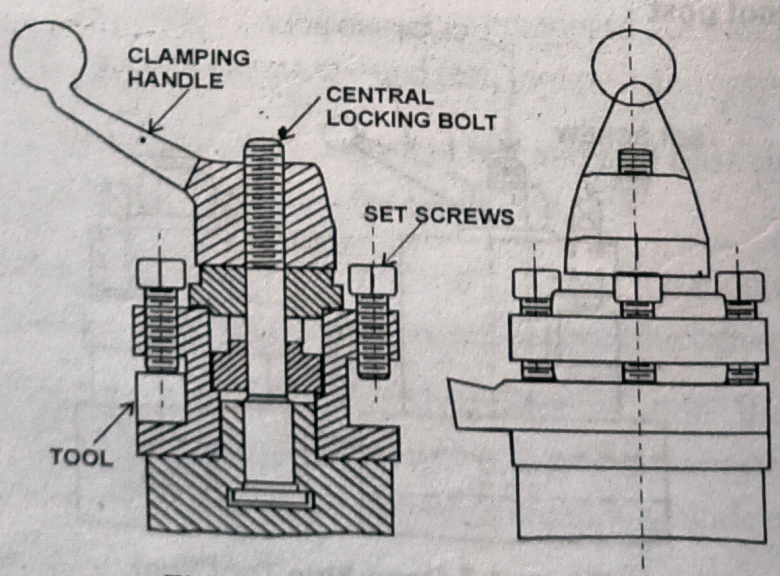

Figure 1.9 Four way tool post

The four way tool post is illustrated in figure (1.9). In this type of tool post four sides are open to accomodate four tools at a time. The tool is held in position by separate screws and a locking bolt is located at the centre. The tools are fitted in proper sequence of operation and by indexing the tool post through 90° any one of the tools may be fed into the work. Indexing device may be incorporated to enable the post to be swivelled exactly through 90°. This type of tool post is used in moderately heavy lathes and is suitable for repetition work.

e) Apron: It is the hanging part in front to the carriage is termed as the apron. It is attached to the saddle and hangs in front of the bed. It is contains gears, clutches and levers for moving the carriage by a hand wheel or power feed.

5. Feed Mechanism

The movement of the tool relative to the work piece is termed as "feed". The lathe tool can be given three types of feed namely, longitudinal, cross and angular. When the tool moves parallel to the axis of the lathe, the movement is called longitudial feed. This is achieved by moving the carriage. When the tool moves perpendicular to the axis of the lathe, the movement is called cross feed. This is achieved by moving the cross slide. When the tool moves at an angle to the axis of the lathe, the movement is called angular feed. This is achieved by moving the compound slide, after swivelling it at an angle to the lathe axis.

Feed rod: The feed rod is a long shaft, used to move the carriage or cross slide for turning, facing, boring and all other operations except thread cutting. Power is transmitted from the lathe spindle to the apron gears through the feed rod via a large number of gears.

6. Thread cutting Mechanism

The lead screw is long threaded shaft used as a master screw and brought into operation only when threads have to be cut. In all other times the lead screw is disengaged from the gear box and remains stationery. The roatation of the lead screw is used to traverse the tool along the work to produce screw threads. The half nut makes the carriage to engage or disengage the lead screw.

7. Chasing dial or Thread chasing dial: We know that the carriage is engaged to the lead screw through the split nut for cutting threads. The tool is withdrawal from the work after each pass or cut taken to the starting point manually (the split nut is disengaged know and re-engaged with the work with the help of the split nut. This process is repeated till the threads of desired dimension are produced. Care has to be taken to see that the tool is engaged (by engaging the carriage with the split nut) if the half nut is engaged in accurately the tool will start to cut a separate thread on the previous thread form and hece the job will be specified.

Therefore it is quite important to engage the nut in right time and at right position with respect to the lead screw in each successive rotation. The dial indicates when the split nut should be engaged with the lead screw to follow the previously cut groove. It is fitted on the saddle so it moves with the carriage. It has a dial and worm wheel that meshes with the lead screw. As the lead screw rotates, the worm wheel rotates and in effect the dial rotates. The dial has eight divisions four numbered and other four un-numbered. [See figure 1.10]

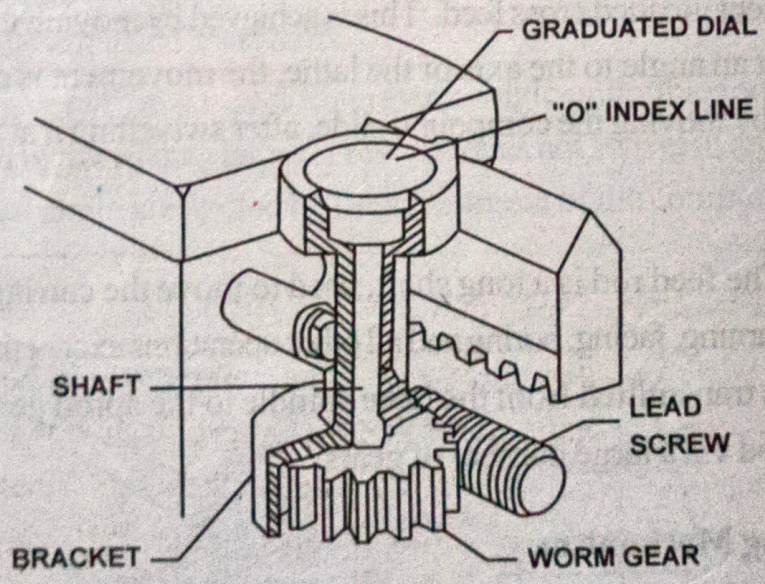

Figure 1.10 The thread-chasing dial mechanism used for thread cutting

A common type of chasing dial has 16T worm wheel for 4T.P.I. lead screw, and the dial face is divided equally into parts.

Split nut engagements rules for thread cutting are tabulated in table.

Table (1):

Type of thread cut	*Engagement of split nut (according to dial marks)*
Even number of T.P.I such as 2, 4, 6 etc.	Engage nut when any mark on the dial (numbered (or) un-numbered) coincides with 0 marks on the saddle.
Even number of T.P.I but divisible by 4. Such as 4,8.12,16 etc.	Engage nut at any dial position.
Odd number of T.P.I., such as 1,3,5,7 etc.	Engage nut when any numbered mark on dial coincides with 0 mark on the saddle i.e., 2, 4,6,8.
Half threads i.e., 4½, 5½, 11½ etc.	Engage nut at half revolutions. i.e., 2, 6 or 4, 8.
Quarter threads 6¼, 7¼, 8¼ etc.	Engage nut at every complete revolution of the dial.
T.P.I which is multiple of T.P.I on the lead screw.	Engage at any time that split nut meshes.

1.3. LATHE SPECIFICATIONS

In order to specify a lathe, a number of parameters could be used on the specific application. However, the major elements used for specification should invariably be based on the components that would be manufacured in the lathe. Thus the following are the basic elements generally specified for the capability of the lathe machine figure (1.11).

where L = Distance between centres

A = Swing diameter over bed

B = Swing diameter over carriage

R = Radius

h = Height of centre from bed

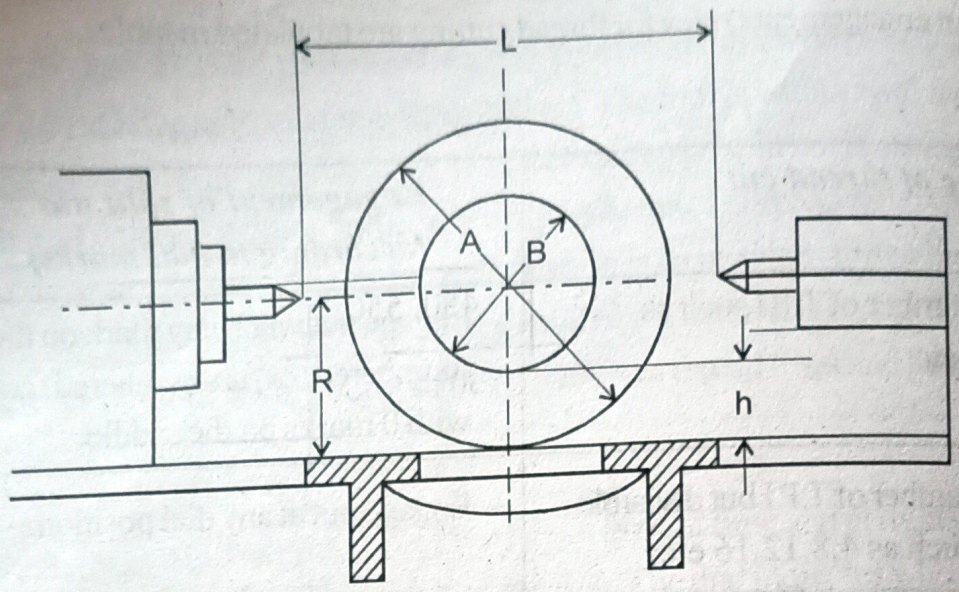

Figure 1.11 Capacity specification for a lathe

i) **Distance between centres (L):** This would be specifying the maximum length of the job that can be turned in the lathe.

ii) **Swing diameter over bed (A):** This specifies the maximum diameter of the job that can be turned in the lathe machine, generally restricted to small length jobs.

iii) **Swing over Carriage (B):** This specifies the maximum diameter of the job that can be turned in the lathe machine with the job across the cross slide, which is generally the case.

Though the above gives the basic capacity of the machine is shown in figure (1.11) there are a number of other factors that should also be specified to fully describe the lathe machine they are:

a) Horse power of the motor

b) Cutting speed range

c) Feed range

d) Screw cutting capacity

e) Accuracy achievable

f) Spindle nose diameter and hole size

Typical specification of some centre lathe are given in Table (2).

Table (2) Specification of centre lathes

Centre height, mm	250, 300	375, 400	525, 600	750, 900
Bed width, mm	325, 375	450, 550	650, 750	900, 1050
Size avialable, mm	1650 to 4200	2400 to 9600	2400 to 9600	2400 to 9600
Distance between Centres (mm)	500 to 3100	1000 to 8200	800 to 8000 mm	
Power Capacity, Hp	3	5	7.5 / 10	10 / 15
Spindle speed range	30 to 550	30 to 350	15 to 200	15 to 200

Further specifications would be based on the accessories used with the machine tool and their respective capabilities.

1.4 TYPES OF LATHE

Lathes of various designs and construction have been developed to suit the various conditions of metal machining. But all of them employ the same fundamental principle of operation and perform the same function.

Different types of lathes are used in manufacturing shops. Some of them are:

1) Engine lathe or centre lathe
   a) Belt drive
   b) Individual motor drive
   c) Gear head lathe
2) Speed lathe
   a) Wood Working lathe
   b) Centering
   c) Polishing lathe
   d) Metal Spinning

3) Bench lathe

4) Tool room lathe

5) Capstan and Turret lathe (Semi automatic lathe)

6) Automatic lathe

7) Special purpose lathe

   a) Wheel lathe

   b) Gap bed lathe

   c) T-lathe

   d) Duplicating lathe

   e) Missile lathe

8) Copying lathe

1) Engine lathe or centre lathe

This lathe is the most important member of the lathe family and is the most widely use Derives its name from the early lathes that were driven by steam engines. Similar to th speed lathe, the engine lathe has got all the basic parts eg. bed, head stock, tail stoc compound rest, carriage, headscrew, feed rod, gear box. But the head stock of an engin lathe in much more robust in construction and it contains additional mechanism for drivin the lathe spindle at multiple speeds. Unlike the speed lathe, the engine lathe can feed th cutting rod both in cross and longitudinal direction with reference to the lathe axis with he of a carriage, feed rod and lead screw. Whereas feed rod is used in auomatic feed of t carriage or the tool and lead screw is used in cutting threads. A lathe that receives i power from an over-head line shaft is a belt driven lathe and is equipped with a speed co and one or more back gears to get a wide range of spindle speeds. A lathe that receiv its power from an individual motor integral with the machine is callled a motor driven lat

A geared head stock lathe gets its power from a constant speed motor and all spe changes are obtained by shifting various gears located in the head stock. It has no co pulley. It is used for many operations like turning, facing, taper turning, thread cuttin knurling, drilling, reaming, grooving, boring etc.

1 (a) Plain turning lathes

The constructional arrangement and principal units of universal plain turning lathes are same as those of engine lathes. The only difference is universal plain turning lathes do not have lead screw. All kinds of lathe work are performed except the chasing of threads with a single-point tool (heavy duty lathes are exceptional). The dimensional data for plain turning lathes are similar to that of engine lathes.

Lathes of small sizes (to a maximum workpiece diameter of 130mm) are available as above-standard or high accuracy bench lathes. In the medium-size models the basic parts like headstock, tailstock carriage, etc., of the corresponding sizes of engine lathes are used. Such plain turning lathes are used in lot production for turning stepped shaft, here they can be considered to be single-purpose lathes. Such lathes may be equipped with tracer-controlled duplicating attachments for automatic loading and unloading and for automatic control of work cycle with numerically controlled systems, these attachments covert them into automatics. Above lathes with standard accuracy are manufactured using engine lathes as basis models.

Heavy-duty lathes are available only as the universal plain turning type. To enable them to machine heavy work with various types of cutting tools, they can be equipped with various attachments and the by extending their processing capacities.

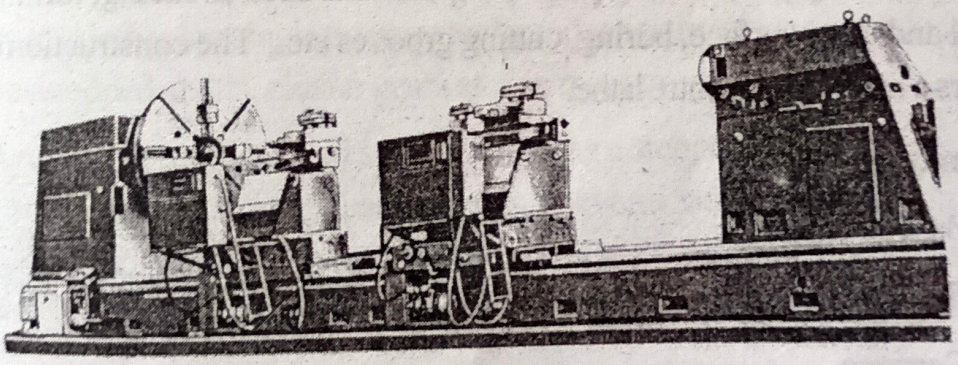

Figure 1.12 Plain turning lathe

Features of plain turning lathes:

The observance of the lead screw simplifies construction of feed gear trains of the lathe since there is no need of mechanisms so typical of engine lathes as the gear core and tumbler gear of the feed gear box and the half-nuts in the apron. Power feed of the carriage may also to absent in small-size lathes, all movements of the tool in relation to the work being manual.

Heavy-duty lathes have several carriages which are powered either by a variable speed DC motors mounted on each carriage or by a commcn feed rod linked kinematically to the lathe spindle.

The compound rests of the carriages are generally power needed. If the carriage is powered from a feed rod, short metric threads or English threads (lesser than the travel or compound rest) can be cut.

In a heavy-duty lathe, the tailstock and steady rests are powered along the bed ways by individual motors. The tailstock spindle runs in antifriction bearing and is similar in design to the head stock spindle. It has a separate drive for positioning motions. For reliable clamping of heavy and long workpieces, a face plate is mounted on the end of the tailstock spindle.

Heavy-duty lathes are available only as the universal plain turning type. To enable them to machine heavy work with various types of cutting tools, they can be equipped with various attachments and there by extending their processing capacities.

1 (b) Facing lathes

Single purpose machines intended for turning work of large diameter but short length are termed as facing lathes. They perform operations such as facing, turning external cylindrical and taper surface, boring, cutting grooves etc., The construction of a facing lathe differs a little with a centre lathe.

Main units are,

1. Baseplate
2. Bed member
3. Carriage
4. Headstock
5. Face plate and
6. Tail stock

The head stock houses the gear box and secured rigidly to the base plate. The Bed member is secured with its longitudinal ways. Tailstock is mounted on a high support and can be positioned as required on the baseplate and clamped by T-bolts.

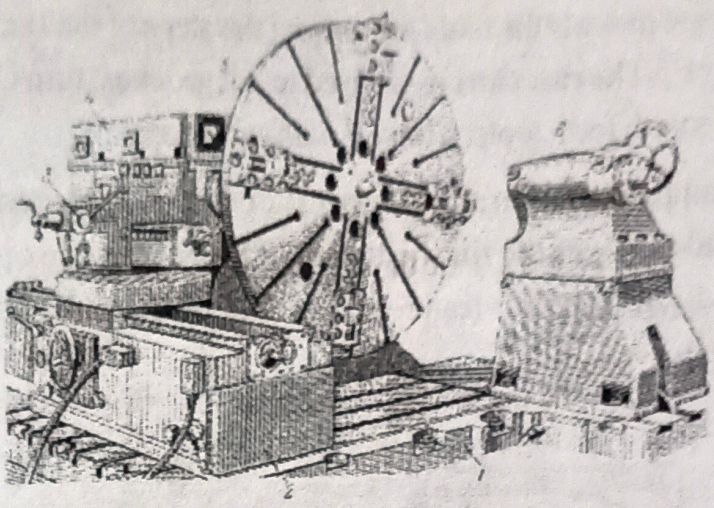

Figure 1.13 Facing lathe

The work is clamped on the faceplate by strap clamps and bolts. If necessary, the work can be supported by the tailstock centre. The gap between the base plate and face plate enables work of a diameter larger than that of the face plate toss be turned. The feeds in longitudinal and transverse directions is powered by separate motors.

Facing lathes have been almost completely superseded by vertical turning and boring mills. Because of their simple construction and low cost, however, they are still employed in piece production and for repair jobs.

1(c) Multiple tool lathes

Multiple tool lathes are single purpose high production machines intended for turning work such as stepped shafts, cluster gears etc., in mass production shops.

The figure show a multiple tool setup for turning a stepped shaft. The multiple tool lathes of two or more carriages each carrying several single point tools operating simultaneously, enable machining time to be reduced since the travel of each tool is only a part of the full length of the blank, and because the carriages operate simultaneously.

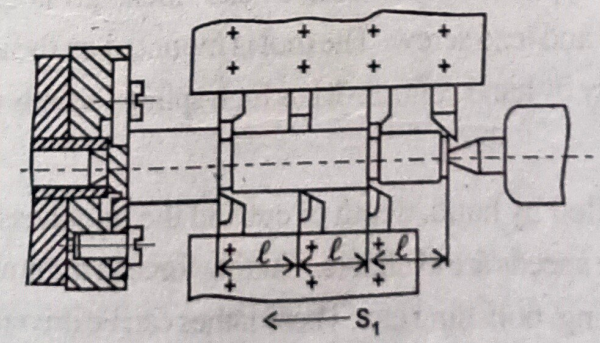

Figure 1.14 Setup for turning a stepped shaft in a multiple-tool lathe

The front carriage mounts the tools for turning the steps of the shaft and travels with longitudinal feed 'f'. The rear carriage is used to cut grooves, turn chamfers and short contoured surfaces with form tools, it travels with cross feed 'f2'

Multiple tool lathes operate on a semi automatic cycle. The operator sets up the blank, starts the lathe and removes the finished work. This enables the operator in multiple machine tool handling that is this feature allows one operator to handle several machine tools simultaneously.

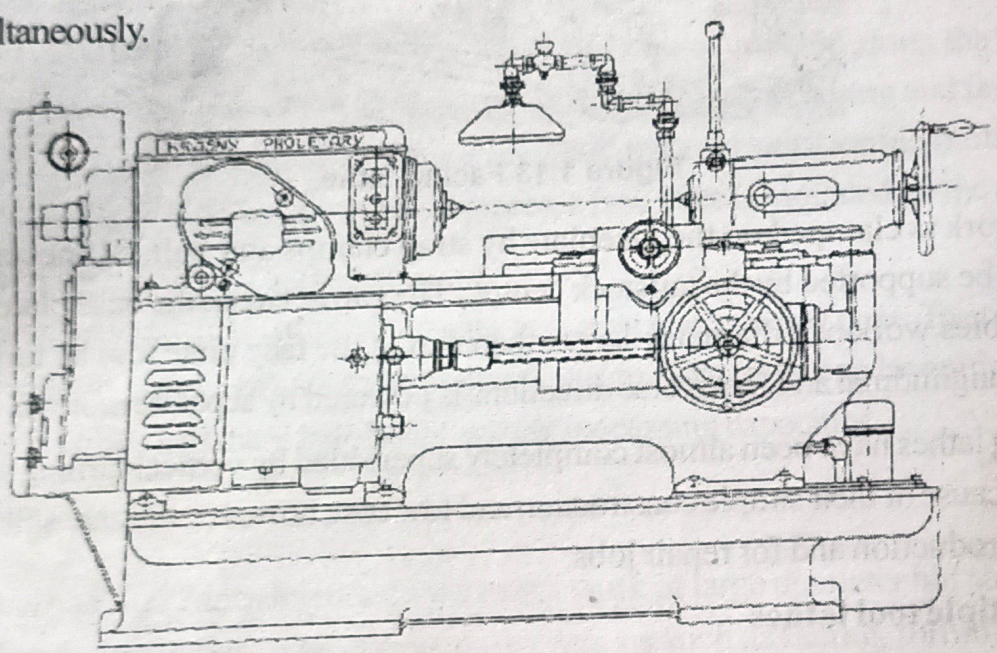

Figure 1.15 Setup for turning a stepped shaft in a multiple-tool lathe

The construction of multiple tool lathes is distinguished for the exceptionally high rigidity of such units as the bed, carriages, headstock and tailstock. This is necessitated by the large total chip cross section when the stock is removed simultaneously by several tools.

2) Speed lathe

It is the simplest of all types of lathes. It has a head stock, tail stock and a tool post. It has no gear box, carriage and lead screw. The tool is mounted on the adjustable tool slide and is fed into work purely by hand control. It has high spindle speeds which usually range from 1200 to 3600.

As the tool is controlled by hand, depth of cut and the thickness chip is very small. Only two or three spindle speeds are avaliable. Cutting force in minimum such as in wood working, spining, centering, polishing etc.. These lathes can be driven at very high speeds and hence the name "speed lathe".

3) Bench lathe

This is a small lathe usually mounted on a bench. It has practically all the parts of an engine lathe or speed lathe and it performs almost all the operations, its only difference being in the size. This is used for small and precision v/ork. It has maximum capacity of 10″ at the face plate.

4) Tool room lathe

A tool room lathe having features similar to an engine lathe. It is a very accurate lathe. Spindle speed ranging from a very low to quite high speed upto 2500 rpm. This lathe is mainly used for precision work on tools, dies, gauges and in machining work where accuracy is needed. This machine is costlier than engine lathe.

5) Capstan and turret lathe

These lathes are development of the engine lathe and are used for mass production. It does not have a tail stock. But there is a hexagonal turret fixed in the carriage carrying six tools. These lathes are actually of semi - automatci type. The advantage is that several different types of operations can be done on work piece a without re-setting of work or tools, and a number of identical parts can be produced in the minimum time.

6) Special purpose lathes

A large number of lathes called special purpose lathes are designed to perform certain specified operation only eg., crank shaft lathe, duplicating lathe and N.C.Lathe etc.

— **a) Wheel Lathe** is made for finishing the journels and turning the thread on rail road car and locomotive wheels.

— **b) Gap bed lathe,** in which a section of the bed adjacent to the head stock is recoverable, is used to swing extra-large diameter pieces.

— **c) T-Lathe** a new member of the lathe family, is intended for machining of rotors for set engines. The axis of the lathe bed is at right angles to the axis of the head stock spindle is the form of a T.

— **d) Duplicate Lathe** is one for duplicating the shape of a flat or round template on to the workpiece. Mechanical, air, and hydralic devices are all used to co-ordinate the movement of the tool to reproduce accurarely the shape of the template.

— **e) Missible Lathe** which has a very large swing for accomodating long missible component of very large diameter, is the most modern and latest is lathe design.

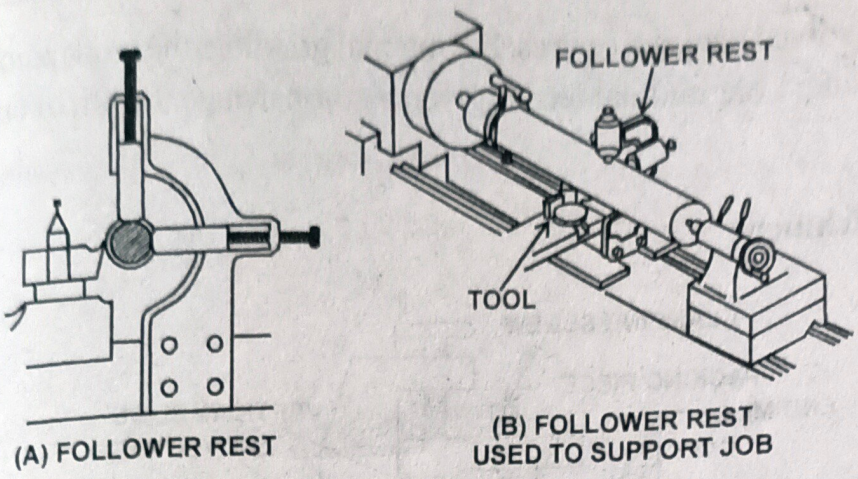

Figure 1.50 Follower rest

1.10 LATHE ATTACHMENTS

There are a number of attachments used on lathe to increase efficiency and production. The commonly used attachments are:

a) Stops
b) Grinding attachment
c) Milling attachment
d) Taper turning attachment
e) Copying attachment
f) Relieving attachment

a) Stops

These are used on the carriage and the cross slide to position them accurately. These are used for repeated them accurately. These are used for repeated works. These stops save set up time and given more accurate works.

b) Grinding attachment

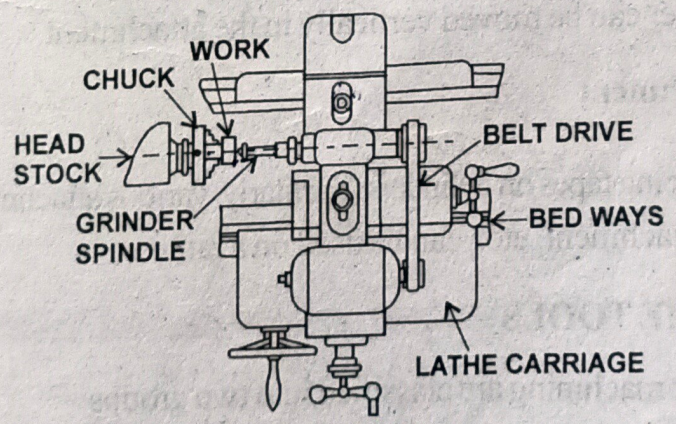

Figure 1.50(a) Grinding attachement for lathe (or tool post grinder)

A special grinding attachment is mounted on the cross-slide of the lathe. Both the grinding wheel and job are rotated during grinding. For grinding external surface, the

workpiece is revolved between centres. For internal grinding, the work piece is revolved in a chuck or plate, Longitudinal feed is given by the carriage. Depth of cut is given by cross slide.

c) Milling attachment

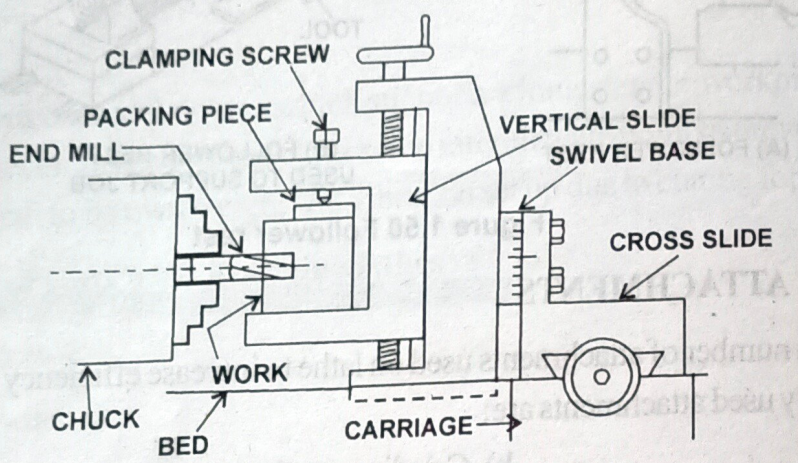

Figure 1.51 Milling Attachment

Milling operation can be done on the lathe using a milling attachment. It is done by any of the two methods.

i) The milling cutter is held in a chuck and rotated. The work is supported on the cross slide by a special attachment. The work is fed against the rotating milling cutter. The depth of cut is given by vertical adjustment of work given by the attachment. This method is used for cutting keyways or grooves.

ii) The work is supported between centres and does not rotate. The milling attachment is mounted on the carriage. The cutter is driven by a separate motor. The feeding is given by the carriage. The cutter can be moved vertically in the attachment.

d) Taper turning attachment

This is used for producing tapes on cylinders. Similarly, various attachments like copying attachment, relieving attachment, etc., can be used on a lathe.

1.11 TYPES OF LATHE TOOLS

Cutting tools used for machining are classified into two groups:

Classified into two groups.

a) Single point cutting tool.

b) Multi point cutting tool.

Single point cutting tools have only one cutting edges. While multi point cutting tools have several cutting edges (drill, milling cutter) single point cutting tools are used on lathes.

1.11.1 Classification of single point lathe tools

1. According to the direction of feed.
   i) Right hand tools
   ii) Left hand tools
2. According to the method of manufacturing the tool,
   i) Solid tool
   ii) Brazed tool
   iii) Inserted or bit tool.
3. According to the method of using the tool.
   i) Turning tool
      a) Rough turning tool
      b) Finish turning tool.
   ii) Chamfering tool
   iii) Shoulder turning tool
   iv) external thread cutting tool
      a) Tools for cutting square threads.
   v) Internal thread cutting tool
   vi) Facing tool
   vii) Forming tool
   viii) Grooving tool
   ix) Boring tool
   x) Counterboring tool
   xi) Undercutting tool
   xii) Parting-aft tool
   xiii) Round nose tool

1.16 CAPSTAN AND TURRET LATHES

1.16.1 Introduction

In any ordinary centre lathe, generally cylindrical components are produced. We have to change the tool every time when a new operation is to be done. When a large number of identical components are to be produced, an ordinary lathe (centre lathe) is not suitable. The changing and setting of tools will take more time. The rate of production will be very low, also, the cost of production will be high.

The rate of production can be increased by reducing the time spent in changing and setting the tool. This is done by a single setting of tools. More than one tool (multiple tools) can be applied at a time. Capstan and turret lathes have these facilities. These lathes are called semi-automatic lathes.

In capstan and turret lathes, operations like loading, feeding of bar stroke, bringing the different tools to correct position are done manually. The capstan lathe was first developed in the United States of America by Pratt and Whitney sometimes in 1860.

1.16.2 Types of capstan and turret lathes

Semi-automatic lathes are lathe in which all machining operations are done automatically but the loading and unloading operations are done manually.

The following are the main types of semi-automatic lathes.

1. Turret or saddle type lathe
2. Capstan and ram type lathe

The construction and working principle of turret lathes and capstan lathes are same. The turret lathe is meant for large and heavy jobs. The capstan lathe is meant for light and small jobs.

1.16.3 Main parts of capstan and turret lathes or semi automatic lathes

Depending on the position of the turret lathes are classified into two types:

1. Horizontal turret lathe
2. Vertical turret lathe

The commonly used horizontal turret lathe are further classified as

i) The ram type turret lathe or capstan lathe.

ii) The saddle type turret lathe or combination turrets

The construction and working principle of turret and capstan lathe are same. The turret lathe is meant for large and heavy jobs. The capstan is meant for light and small jobs.

Main parts of Capstan and turret lathes

1. Bed
2. Head stock
3. Turret heand and saddle
4. Cross slide

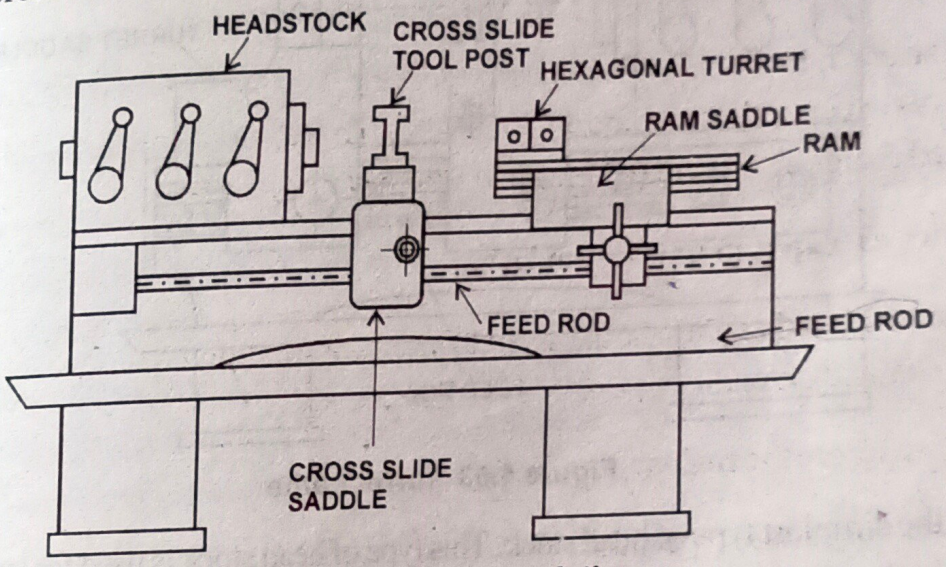

Figure 1.62 Capstan lathe

Bed

The bed forms the base of the machine. It is made of cast iron. It is rigid enough to absorb vibrations and with stand cutting forces. The bed has machined guideways on its top. At one end of the bed, head stock is mounted. At the other end, a saddle moves over the bed. Tailstock in an ordinary lathe is replaced by a saddle in turret and capstan lathe. A cross slide is mounted on the bed between head stock and saddle.

Head stock

The head stock is similar to that of an ordinary centre lathe. But here it is larger and heavier in construction. A more powerful motor is provided. The spindle speed ranges from 30 to 2000 rpm.

The different types of head stock generally used are:

1. Step-cone pulley head stock.
2. Electric motor driver head stock.
3. All geared head stock.
4. Pre-optive or pre-selective head stock.

1. Step-cone pulley head stock

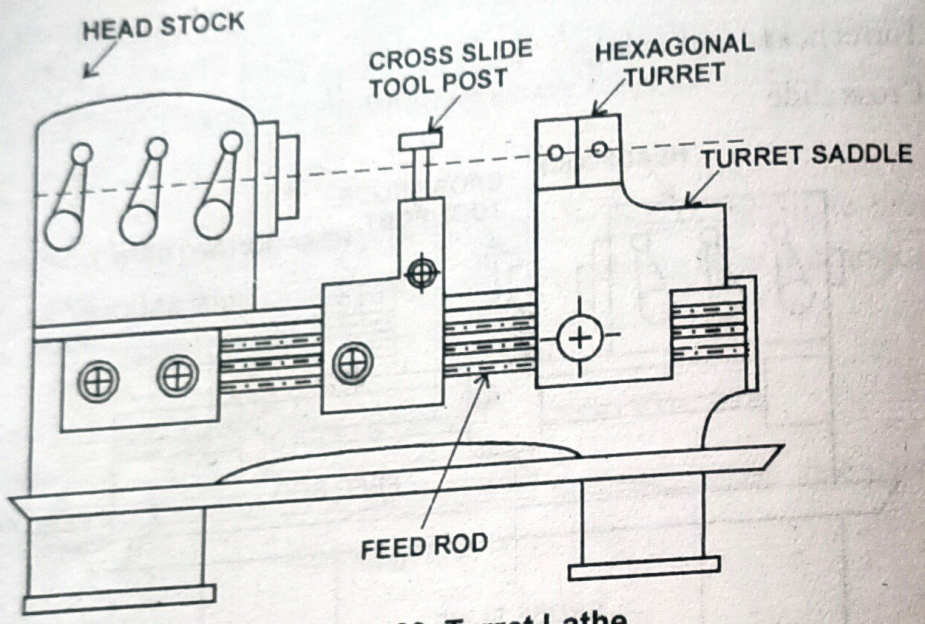

Figure 1.63 Turret Lathe

This is the simplest type of head stock. This type of head stock is used for small capstan lathes. Only three or four speeds are available in this type. Three or four steps of pulleys are fitted to the head stock. Drive is given to these pulleys through a belt from a counter shaft. Stopping, starting and reversing of the spindle is done by pressing a foot pedal. The capstan lathe with step cone pulley headstock is used for machining small and almost constant diameter work pieces.

2. Electric motor driven head stock

This type of head stock has a variable speed electric motor. Usually 3 or 4 speeds are available. The spindle of the machine and the shaft of the motor are one and the same. The speed of the spindle can changed or reversed by controlling the motor regulator. This type of head stock is suitable for smaller diameter workpieces rotated at high speeds. This spindle is hollow and the bar stock can be fed through it.

3. All geared head stock

This type is head stock is driven by a constant speed motor. The motor is connected to the gear box by vee velts. The spindle gets the drive through the gear box. Different spindle speeds are obtained by means of sliding gear mechanism in the gear box. Various gear combinations are obtained by shifting levers to different position. This head stock is meant for heavy duty and smooth operation.

4. Pre optive (or) Pre selective head stock

It is an all geared head stock. It has arrangements for rapid stopping, starting and speed changing. The different speeds for different operations are obtained by just pulling a lever. The required speeds for the next operations is selected before hand. The speed changing lever is placed at the selected position. After the first operation is completed, the lever is actuated. The spindle starts rotating at the selected speed for the next operation. This takes place without stopping the machine. For this, a friction clutch is used.

3. Turret head and saddle

A turret is a block which can hold a number of tools at a time. The turret can be indexed (rotated through fixed angle) about a vertical axis. By indexing, different tools are brought to position for machining.

Generally, a hexagonal turret is used. It has six faces. On each face, there is a bore to receive the shank of a tool. Four tapped holes (threaded holes) are available on each face of the turret for clamping tool holders.

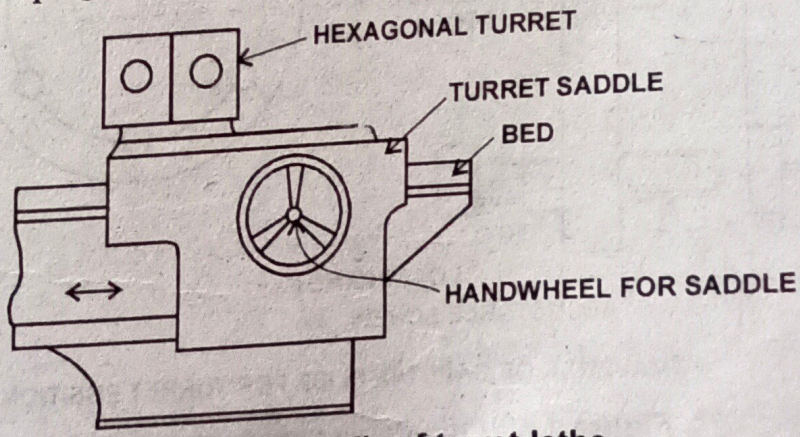

Figure 1.64 Saddle of turret lathe

On smaller capstan lathes, the turret is circular. Six holes an equally spaced around the circumference of the circular turret. Figure (1.65) a large star wheel is fitted at the front of the machine. It is used for moving the turret forward for each tool position. The forward

movement is controlled by a pre-set stop. When the turret returns to the starting position, it is automatically indexed by 1/6 of a revolution. The next tool comes into the cutting position. This is done by a mechanism known as geneva mechanism.

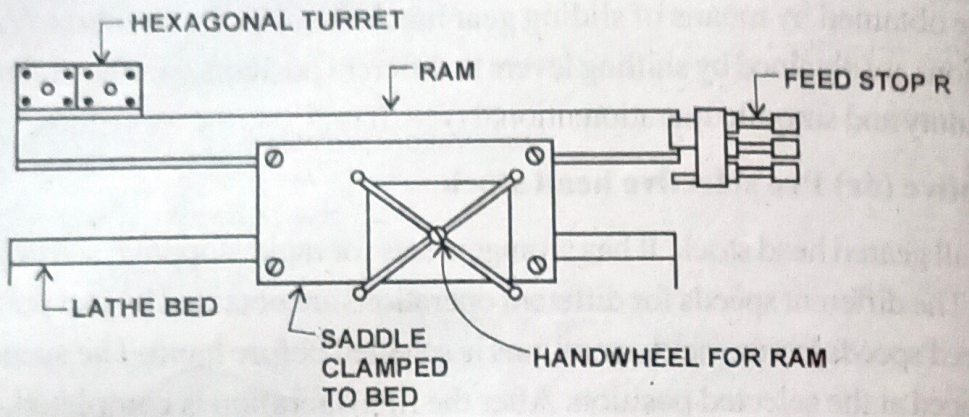

Figure 1.65 Ram of capstan lathe

There are 6 adjustable stops, one for each of the six turret faces. While setting the tool, each stop is adjusted to control the length of travel of the turret. Whenever the turret is indexed. These six pre-set stops also get indexed refer figure (1.66).

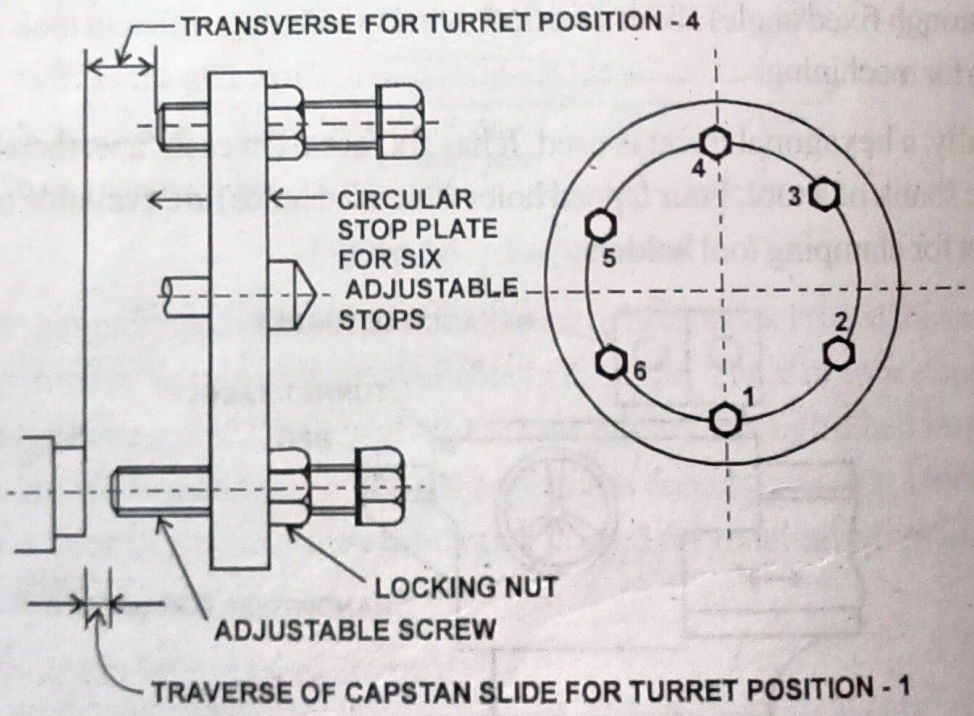

Figure 1.66 Adjustable stop for turret lathe

In a capstan lathe, the turret head is mounted on a ram. The ram slides on a saddle. The saddle can be positioned on the lathe bed ways and clamped at that position. In a turret lathe, the turret head is mounted on the saddle itself. The saddle slides on the bed ways while machining.

The commonly used types of carriage or chaser saddle can be classified into two main groups:

1. Reach over type
2. Slide hung type

Reach over type carriage is a conventional type. It is also known as bridge type saddle because it bridges.

4. Cross slide

The cross slide is provided over the bed of the lathe between the head stock and turret saddle. The cross slide has two tool posts. One tool post is mounted at the front of the machine. This front tool post has a square turret. This has four faces for mounting the cutting tools. This four way turret can move in two directions. Perpendicular and parallel to the spindle axis. The square turret can be indexed through 90°. Hand or power feed can be used. The rear tool which is fitted upside down. This is because the surface of the work moves upwards in the rear end.

1.16.4 Working principle of turret and capstan lathe

The work pieces are held in collets or chucks. In turret lathes, large work pieces are held by means of jaw chucks. These chucks may be hydraulically or pneumatically operated. In a cpastan lathe, bar stock is held in collet chucks. A bar feeding mechanism is used for automatic feeding of bar stock.

At least eleven tools can be set at a time in turret and capstan lathe. Six tools are held on the turret faces, four tools in the front square tool post and one parting off tool at the rear tool post. While machining the turret head moves forward towards the job. After each operation, the turret head goes back. The turret head is indexed automatically. The next tool comes into machining position. The indexing is done by an indexing mechanism. The longitudinal movement of the turret corresponding to each of the turret position can be controlled independently.

By holding different tools in the turret faces, the operations like drilling, boring reaming counter boring, turning and threading can be done on the component.

Four tools held on the front tool post are used for different operations like necking, chamfering, form turning and knurling the parting off tool in the rear tool post is used for cutting off the work piece. The cross wise movement of the rear and front tool posts are controlled by pre-set stops.

1.16.5 Specifications of Capstan and turret lathe

The size of a capstan or turret lathe is specified by the maximum size of workpiece diameter, the swing over cross side and swing over bed as 75-150-200. That means the maximum size of work piece diameter is 75mm, the swing over cross slide is 150mm and the swing over bed in 200 mm. The other specifications are given below.

1. Number of spindle speed
2. Number of feeds for the carriage
3. Number of feeds for the turret or turret saddle
4. Net weight of the machine
5. Floor space
6. Power of the motor.

1.16.6 Difference between Capstan and Turret lathes

CAPSTAN LATHE	TURRET LATHE
1. It is a light duty semi-automatic lathe	It is a heavy-duty semi automatic lathe
2. The turret head is mounted on a ram The ram slides on a saddle. The saddle is clamped at the required position on the bedways.	The turret head is mounted on a saddle. The saddle slides directly on the bed while machining.
3. This has a non-rigid construction. Hence, only light cuts can be taken.	This construction provides rigidity to the tool while cutting. Hence heavier cuts can be taken.
4. The ram with the head can be moved to a small distance. It is limited by the lathe of travel of the ram of the saddle.	The saddle with the turret head can be moved over the entire length of the bed while machining.
5. Only shorter workpiece can be machined.	Longer workpieces can be machined.

6. This is suitable for machining small components for a bar stock. Collets are generally used for holding.	This is suitable for heavy works which are held in Chucks.
7. The turret head fitted on a ram can be easily move manually over the saddle	It is difficult to move the turret head with the saddle manually on the bed.
8. It is used for machining and small jobs upto 60mm diameter.	It is used for machining large and heavier work piece upto 200mm diameter.
9. This facility is not available in capstan lathe.	Some turret lathes have cross wise movement for the hexagonal turret. This arrangement helps turning of large diameters, facing and contour turning.
10. This over hung type cross slide is not available in capstan lathe.	Some turret lathes have slide hung type cross slide. This type of cross slide is not supported by the rear bedways. This arrangement enables machining of larger diameter works. There is not rear tool post in this type.

1.17 WORK HOLDING DEVICES

In capstan and Turret lathes, work is not held between centres and there is no tail stock to support the work. The work is held is chucks or fixtures only. Usually collet chucks are used is capstan lathe.

Collet chucks

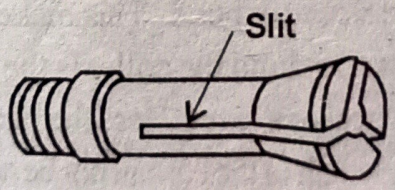

(a) Collet

Small components are produced in large number in capstan lathe. Generally these components are produced from work pieces is the form of bar stock. These bar stock have circular or hexagonal cross section.

(b) Single purpose machine:

Have the machine is designed for producing a single component of fixed shape and size. This is used in production lines of a single product.

5. Classification according to the feed control

(a) Single cam shaft rotating at constant speed:

Have a single cam shaft controls the working and idle motions of the tool. The idle motion and working motion take place at the same speed. Hence cycle time in longer.

(b) Single cam shaft with two speeds:

The cam shaft rotates at slow speed for working motion. It rotates at faster speed during idle motion. Hence idle time in reduced.

(c) Two cam shafts:

The tool movements during working motion are controlled by a main cam shaft. The main cam shaft rotates at slow speed. The tool movement during idle motion is controlled by an auxilially cam shaft. This cam shaft rotates at faster speed. Hence idle time is reduced.

9.3 SINGLE SPINDLE AUTOMATIC LATHE

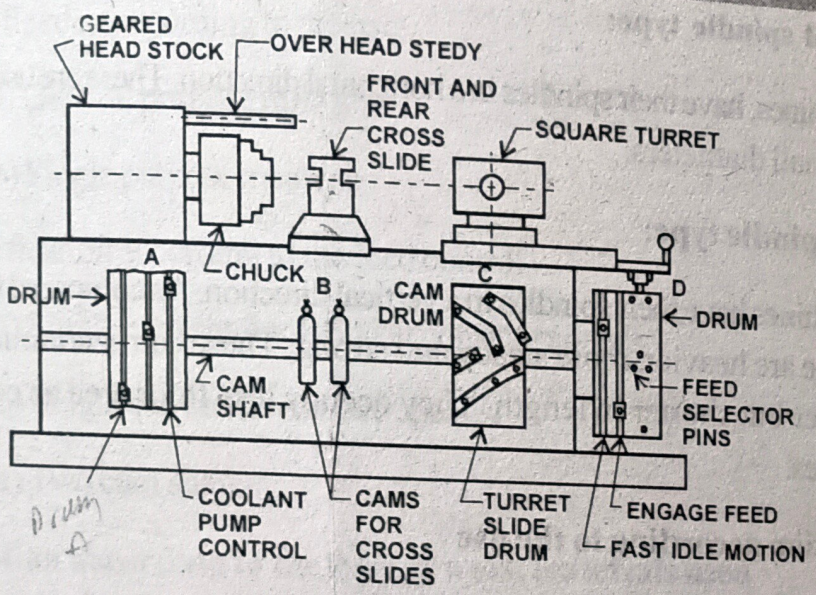

Figure 9.1 Single spindle automatic lathe

This figure (9.1) shows the single spindle automatic lathe. The lathe has a geared head stock. The spindle of the head stock has one slow speed. The spindle speed is changed by the trip dogs on the drum A.

At the end of the bed, a square turret is provided. The travel of the turret slide is controlled by the adjustable cam drum C. The turret indexes to the next face at the end of each stroke.

Two cross slides are situated between the head stock and the turret. One cross slide is at the front and the other at the rear slide. The cross slides have independent movements. The travel of the cross slides have independent movements. The travel of the cross slides are independently controlled by cams B. Overlapping of operations by the tool in the turret and the tools in the cross slide can be done. The correct feed for each machining operation can be automatically selected by the feed selector pins on the drum D. The following types of single spindle automatic lathe are mostly used.

1. Automatic cutting off machine.
2. Automatic screw cutting machine.
3. Swiss type automatic screw machine.

9.3.1 Automatic Cutting off Machine

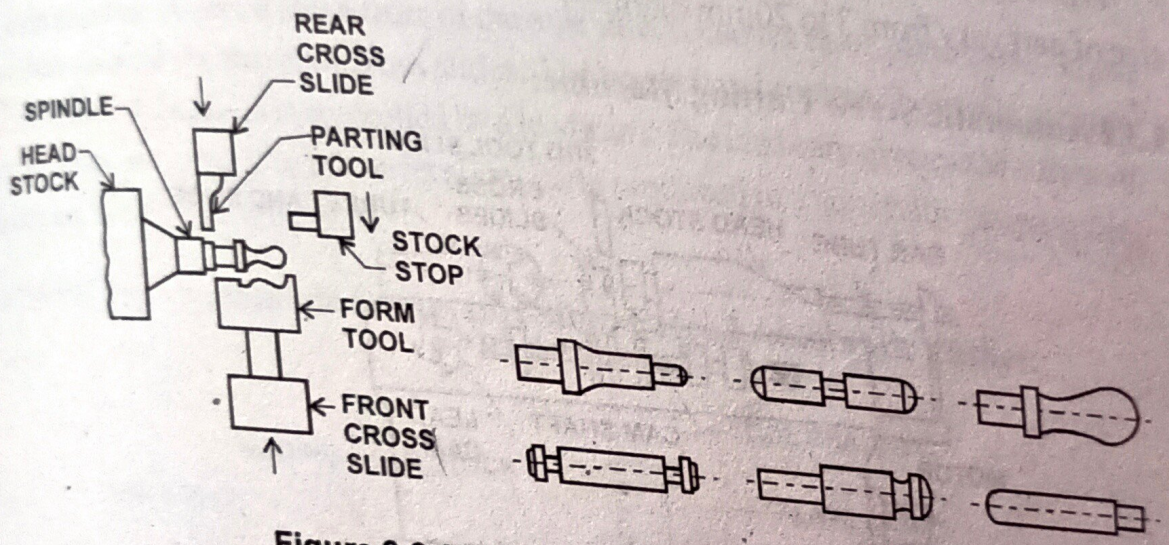

Figure 9.2 Automatic Cutting Off Machine

The automatic cutting off machine is used for producing large quantities of parts of small diameter and shorter lengths. Components with simple shapes are produced in this machine. The operations performed in this machine are plain turning, facing, recessing and cutting off.

The principle of operation of an automatic cutting off machine is shown in figure (9.2).

The machine is of simple design. The head stock with the spindle is mounted on the bed 2 to 4 cross slides are mounted on the bed. The front cross slides are used for turning and forming operations. Rear tool slide is used for facing, under cutting and cutting off operations.

The bar stock is held in a collect chuck. A bar stop, held on a slide is automatically advanced in line with the spindle axis at the end of each cycle. The stock is fed out of the collect by a bar feeding mechanisms up to the stop. Bar feeding is done by a cam mechanisms.

The machine has a single cam shaft which controls the working and idle motion of the tools. The cam shaft runs at constant speed. Hence working motions and idle motion take piece at the same speed. Hence the cycle time is more.

The form tool held on the front tool slide produces the required shape of the component. The parting off tool in the rear slide is used to cut off the component after forming.

In some machines an end working slide is available. This slide travels along the spindle axis. Using this slide, drilling and reaming operations can be carried out.

Tvpical parts produced in automatic cutting off machine are shown in figure (9.2). The size of part vary from 3 to 20mm diameter.

9.3.2 Automatic Screw Cutting Machine:

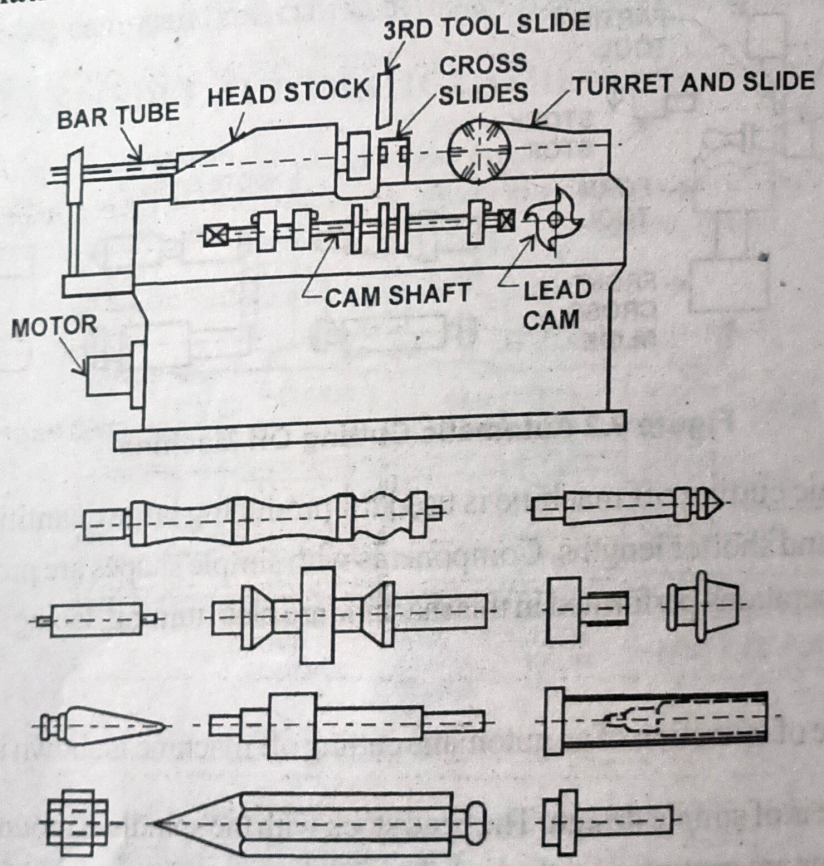

Figure 9.3 Automatic Screw Cutting Machine

This machine is also called turret type automatic screw machine because it has a turret head. This machine is used for producing small screws of all types. Complex shapes on external and internal surface of parts can be produced. The parts are produced from bar stock (or) from separate blanks. The size of parts produced vary from 12.5 to 60mm diameter.

The different operations that can be performed in this machine are centering, turning cylindrical, tapered and formed surfaces, threading, drilling, boring, reaming, spot facing, knurling, facing and cutting off.

The head stock with the spindle is mounted on the bed. The spindle cam rotate in both the directions. Collect chuck is used to hold the bar stock. Upto ten different tools may be held at one time. A turret head carriers six tools. These are three cross slides. One is at the front, the other is at the rear and the third is at the top. Form tools are held in the front and rear tool slides cut off tool is held in the top slides.

A cam shaft is mounted at the front of the machine. It carries three plate cams. These plate cams control the travel of cross slides. The turret head rotates about a horizontal axis. The turret slide travel is controlled by a lead cam. The lead cam gives a slow forward and fast return movement to the turret slide. Parts produced in a automatic screw cutting machine are shown in figure (9.3).

9.3.3 Swiss Type Automatic Lathes (or) Sliding Head Automatic Lathes:

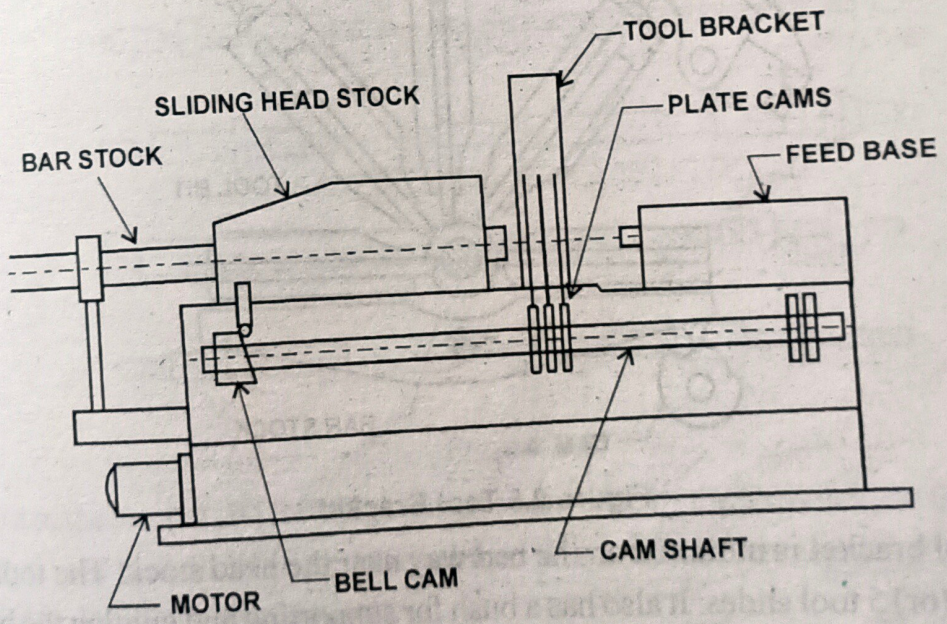

Figure 9.4 Swiss Type Automatic Screw Machine

This machine was designed and developed in Switzerland. So it is often called as Swiss Auto Lathe. The machine is also known as Sliding Head Screw Machine (or) Movable Head Stock Machine.

This machine is used for machining long accurate parts of small diameters (2 to 25mm). These parts are produced from bar stock. The machine has the following features.

1) A sliding head stock.

2) A tool bracket having 4 to 5 tool slides.

3) A special attachment called feed base.

4) A cam shaft.

1) Sliding Head Stock:

This head stock has a collect. The bar stock is held in the collect. The head stock slides along the guide ways of the bed. A bell cam connected to the cam shaft controls this sliding motion.

2) Tool Bracket:

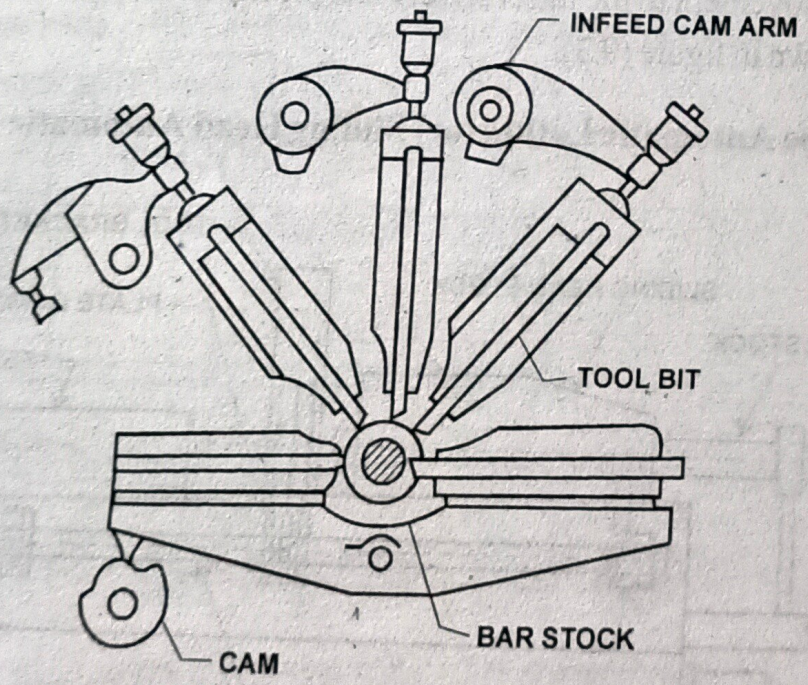

Figure 9.5 Tool Bracket

The tool bracket is mounted on the bed way near the head stock. The tool bracket supports 4 (or) 5 tool slides. It also has a bush for supporting and guiding the bar stock. Two slides are positioned horizontally. i.e., one at the front and the other at the rear. The

other slides are arranged above these slides. These slides can move radially. All the slides can move back and forth. These slides are actuated independently by sets of rockers arms and plate cams. Plate cams are fitted to the cam shaft.

3) Feed Base:

The feed base is mounted at the right hand side of the head. This can move along the bed. Using this attachment, operation like drilling, boring, thread cutting, etc., are done. The movement of the feed base is controlled by the plate cam fitted to the cam shaft.

4) Cam Shaft:

The cam shaft is mounted at the front of the machine. It has a bell cam at the left end. This controls the sliding movement of the head stock. Plate cams fitted at the center of the shaft controls the movement of the tool slides. Plate cam at the right end of the cam shaft controls the movement of the feed base.

Working Principles:

The bar stock is held in the rotating spindle by a collect chuck. Head stock slides along the bed ways with the rotating bar stock. This head stock movement gives longitudinal feed to the work. All the tools in the tool slides remove material from the work piece at the same time. The tool in the feed base attachment may also do operations like drilling. After the work piece in machined, the head stock slides back to the original position. One revolution of the cam shaft produces one component.

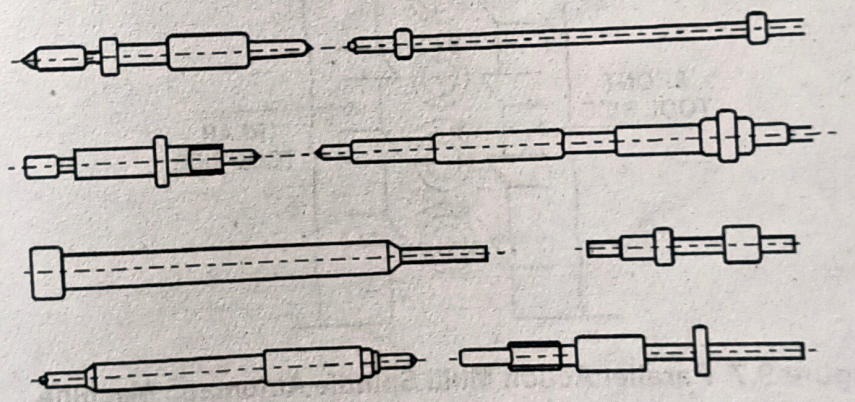

Figure 9.6

Most of the turning and forming operations are done by the tools held on the (horizontal) front and rear tool slides. The vertical tool slides are mainly used for under cutting, chamfering, knurling and cutting off.

Parts normally produced in this machine are shown in figure (9.6).

9.4 MULTI-SPINDLE AUTOMATIC AUTOMATS

These machines are the improved type of single spindle automats. They have 2 to 8 spindles. But 4 and 6 spindles are generally used. Operation are carried out simultaneously in all the spindles. Hence the rate of production in very high. The multi-spindle automatic lathes are classified as follows:

1. According to the type of work piece used
   (a) Bar type machine
   (b) Chucking type machine
2. According to the arrangements of spindle
   (a) Horizontal spindle type
   (b) Vertical spindle type
3. According to the principle of operation
   (a) Parallel action type
   (b) Progressive action type

9.4.1. Parallel Action Multi-Spindle Automatic Machine

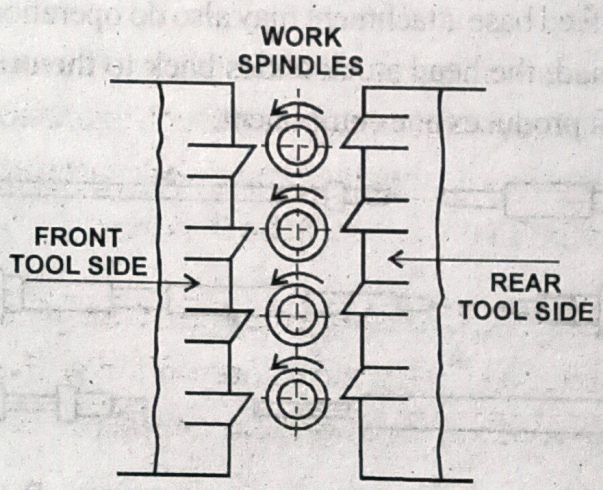

Figure 9.7 Parallel Action Multi Spindle Automatic Machine

This is also called multi-spindle flow machine. Same operation is done in all the spindles. The work piece is finished in each spindle in one working cycle, i.e., in one cycle, the number of components machined simultaneously is equal to the number of spindles in the machine. The rate of production is very high. This machine is suitable for production of small parts of simple shape from bar stock.

The machine has a frame with a head stock. In the head stock, horizontal work spindles are situated at both sides of the spindles. All the working motion and idle motion of the slides are obtained from a cam mounted on cam shaft.

9.4.2 Progressive Action Multi-Spindle Machine

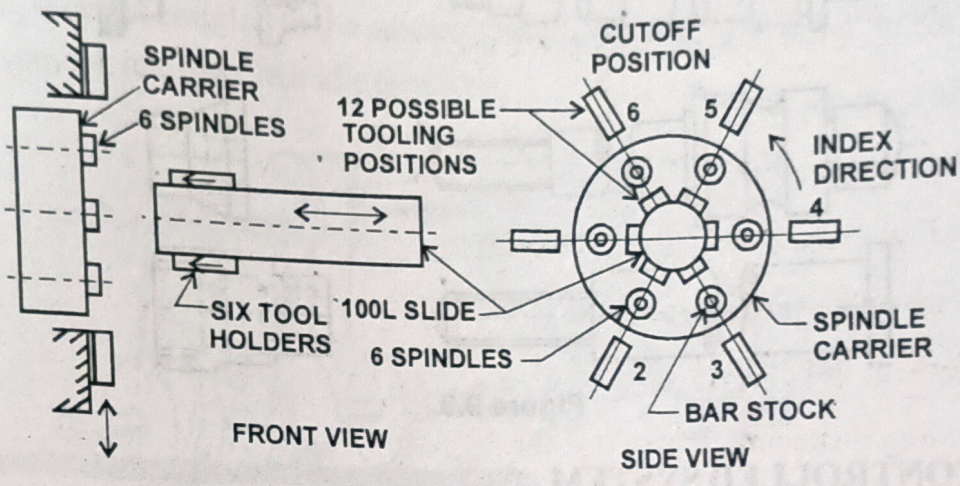

Figure 9.8 Progressive Action Multi Spindle Machine

In this type of machine, the work pieces are machined in stages. A six spindle progressive action multi-spindle automatic lathe is shown in figure (9.8).

The head stock is mounted on the base of the machine. The head stock has a spindle carrier. This carrier rotates about a horizontal axis through the centre of the machine. The working spindles are mounted in the spindle carrier. Work piece are held in the collect in the spindles. The bar stock in fed to the spindle from the rear.

Cross slides are mounted in a frame above the face of the spindle carrier. These tool slides carry forming, chamfering, facing and cutting off tools. These cross slides travel radially inward for cutting operation. The cross slide movement is controlled from a cam in the cam shaft.

The main tool slide is situated in front of the spindle carrier. It carriers tools slide around its periphery. There is one tool slide corresponding to each spindle. The tool slides move towards the spindle while machining. Operations like straight turning, boring and threading are done by the tools mounted on these tool slides. The spindle carrier indexes on its own axis by 60° (360/6) at the end of tool return. As the spindle carriers indexes, it carriers, the work from station to station. In the first station the bar stock is fed. In every station,