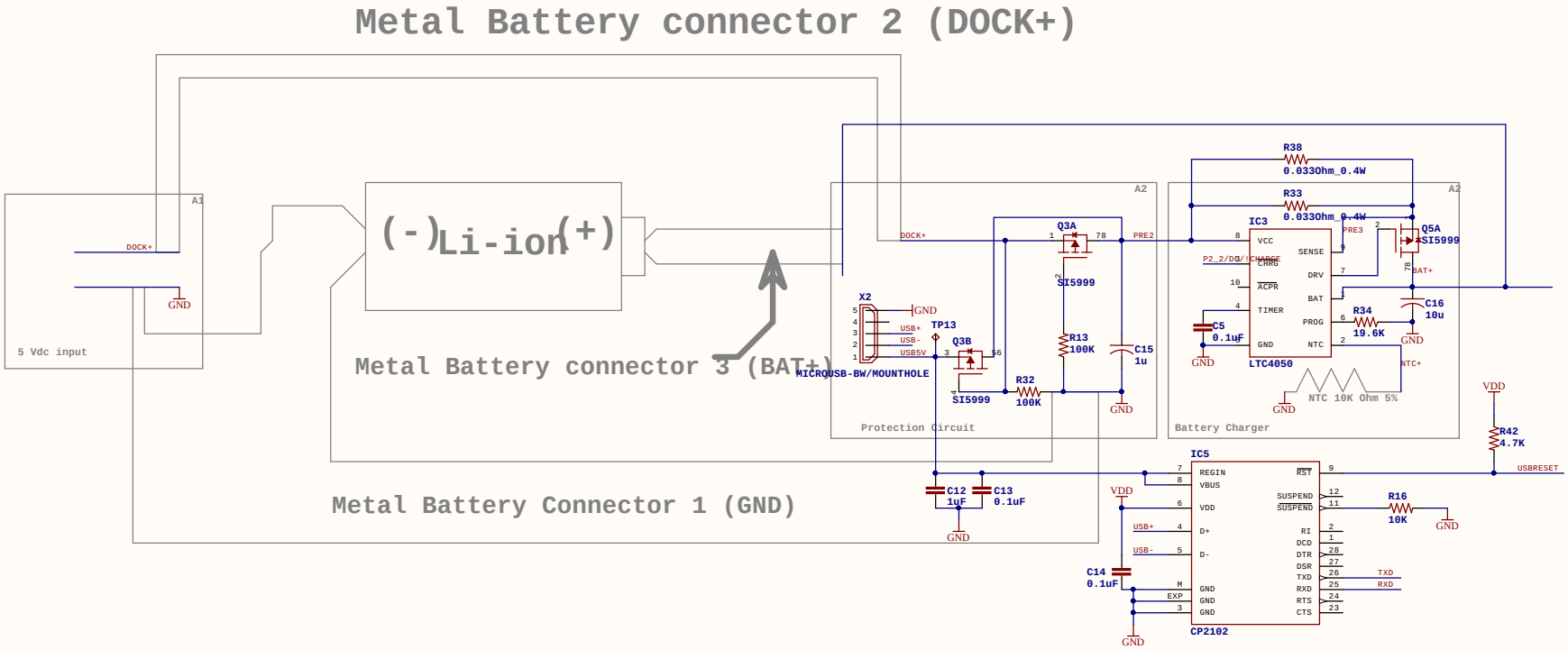

	Pixel1.0
	5/11/2016 6:59:08 PM
	Sheet: 2

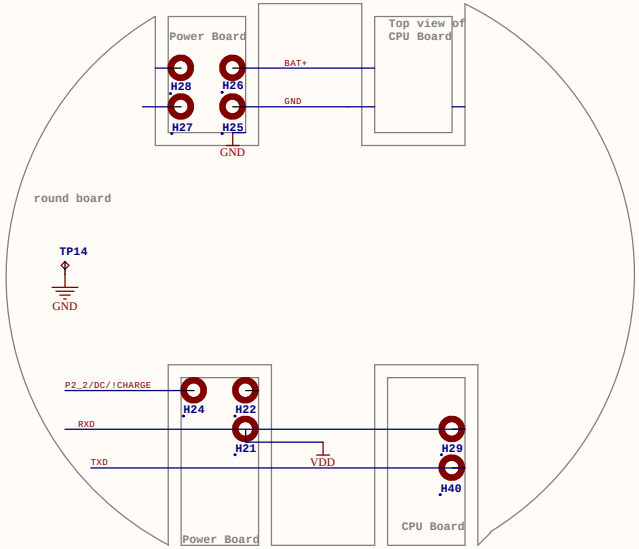

	Pixel1.0
	5/11/2016 6:59:09 PM
	Sheet: 3

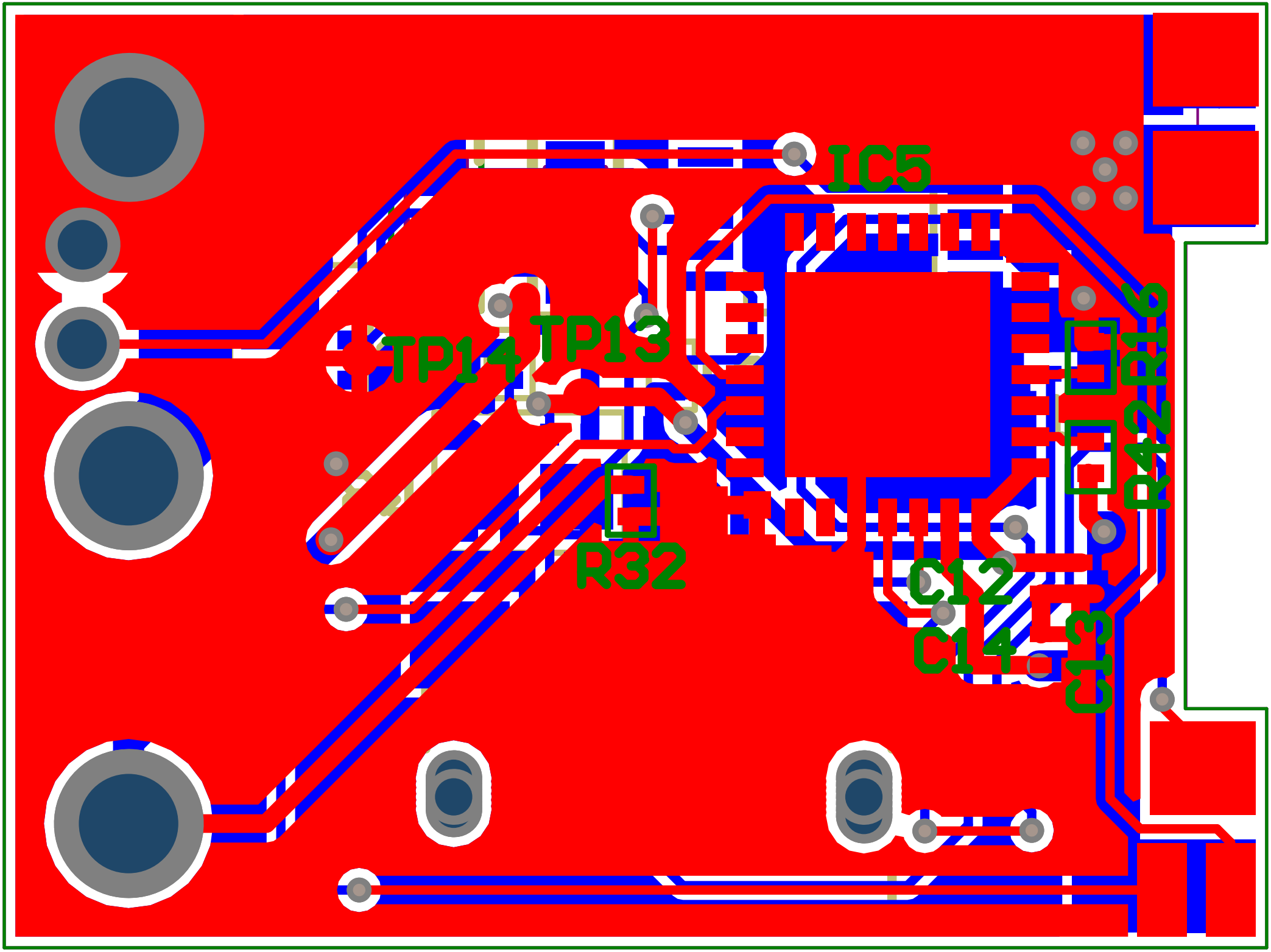
IC5
TP14
TP13
R32
C12
C14
C13
R42
R16