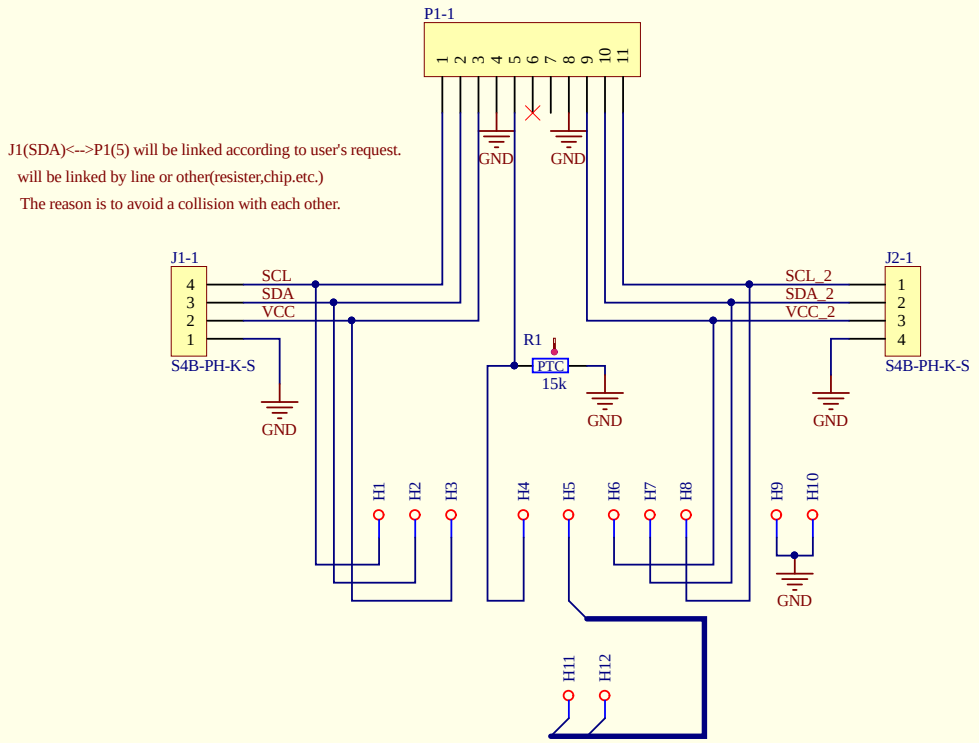

Title	***External Board 1 Mode***		
Size: A4	Number:	Revision: 1.0.0	Drawn by: Anne Moller
Date: 3/29/2016	Time:1:10:44 AM	Sheet 1 of 1	
File: D:\Vapeix_Shield_Work\External Board\PCB_Project\External_Board\External_Board_1mode.SchDoc			