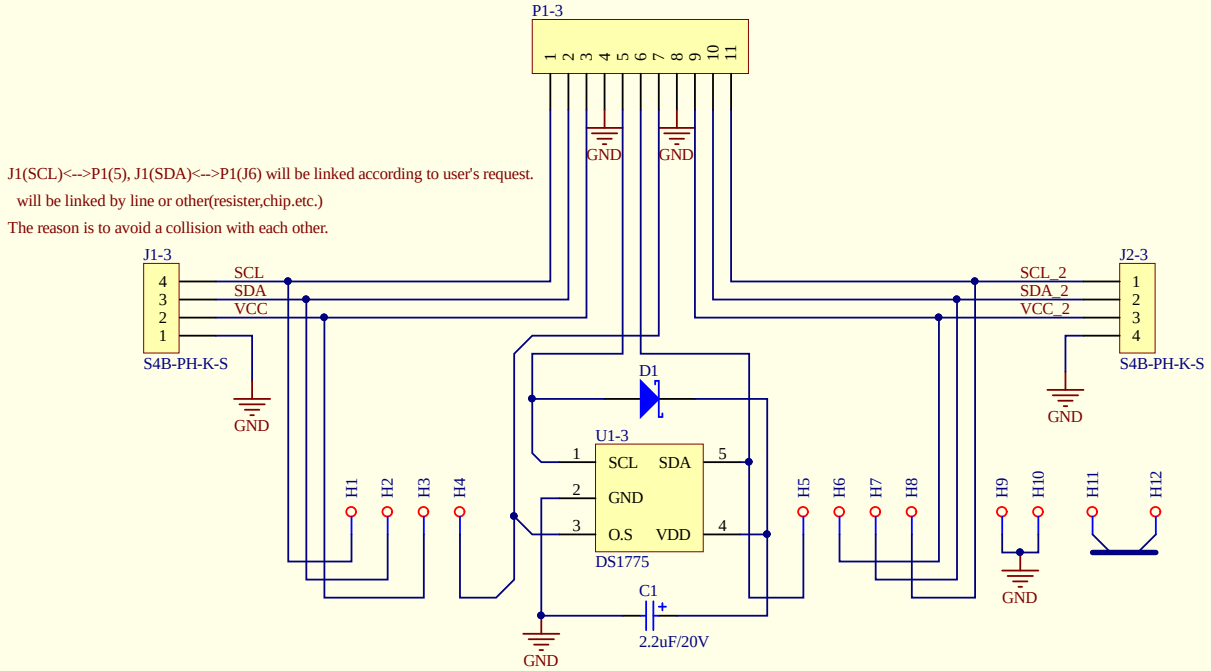


| | | | |
|---|---|---|---|
| Title | ***External Board 3 Mode*** | | |
| Size: A4 | Number: | Revision: 1.0.0 | Drawn by: Anne Moller |
| Date: 3/29/2016 | Time: 9:57:19 PM | Sheet 1 of 1 | |
| File: D:\GitWork\Vapeix-Shield-PCB\External_Board\External_Board_3mode.SchDoc | | | |