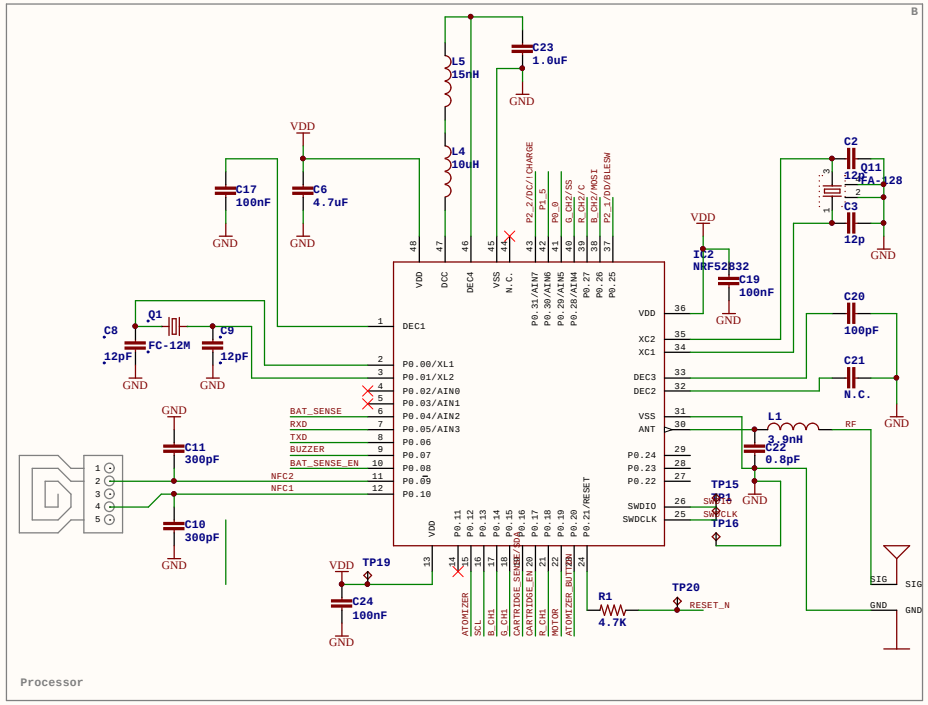

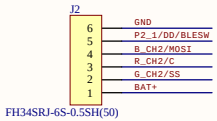

Electronic Cigarette	CPU/voltage regulator
Drawn by: Jerico D. Campos,ECE Owner: Vapeix, Inc.	Pixel1.0
	5/11/2016 6:59:06 PM
"CONFIDENTIAL" , 2016	Sheet: 1

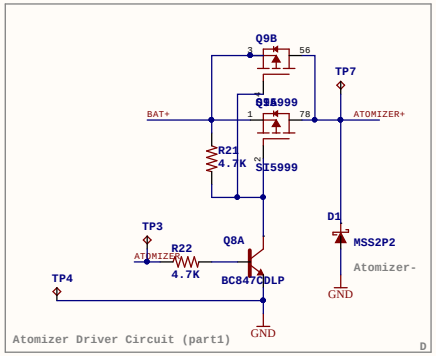

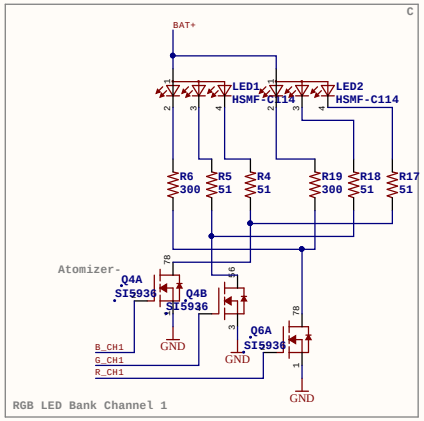

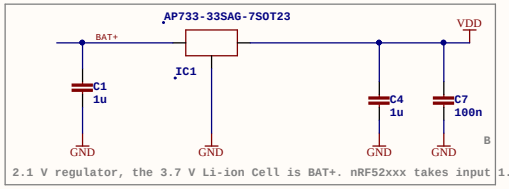

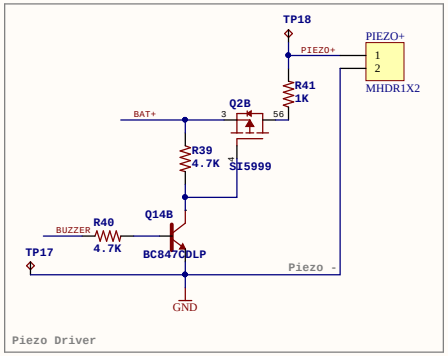

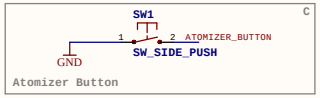

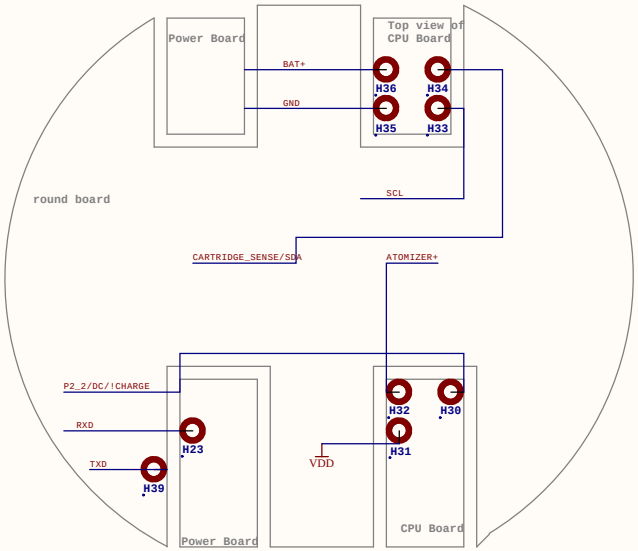

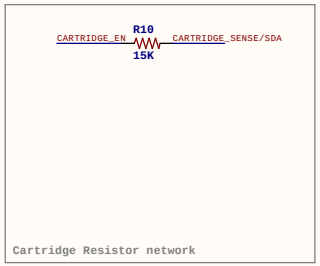

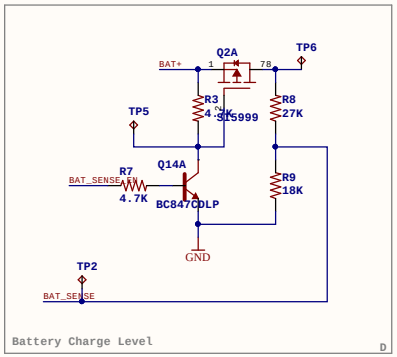

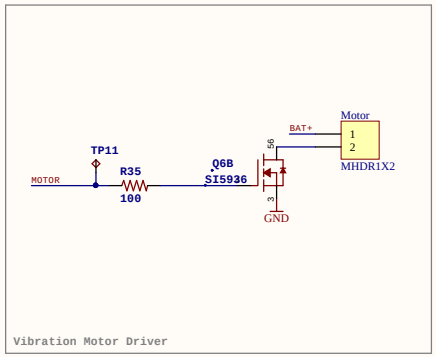

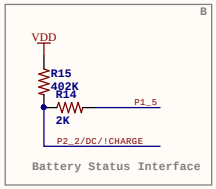

Pixel1.0	
5/11/2016 6:59:09 PM	
Sheet: 3	

ANT
SW1
LED2
LED1
IC2
Q11
US2
Q1
Motor
Q9
D1