SMART PARKING SYSTEM USING INDUCTION LOOP DETECTOR

TEAM MEMBERS

Agrim Sharma - 20BAI1168

Hetal Atwal - 20BAI1105

Sriganesh Raj -20BAI1180

Samarpan Das - 20BCE1410

Varsha Sharma - 20BAI1190

PROJECT OVERVIEW

The Induction Loop-based Parking Detection System is an innovative project designed to address the growing challenges of urban parking management. Leveraging induction loop technology, this system provides real-time and accurate information about parking space occupancy. The primary goal is to enhance the efficiency of parking operations and reduce frustrating efforts to search for an empty slot.

BACKGROUND

Objectives

- Provide accurate and real-time information about the availability of parking spaces.
- Minimize the time drivers spend searching for parking spaces.
- Improve the overall experience for parking system users.
- Contribute to the optimization of traffic flow in and around parking areas.

Technologies

These system utilizes various hardware and software components such as -

- Induction loop
- Arduino
- Spring Boot
- MySQL

LITERATURE SURVEY

- The system proposed by Veeramanickam, M. R. M., et al. [1] prioritizes parking slot allocation based on user preferences, employing automation depicted. The article emphasizes the significance of Erlangian distribution in implementing a priority queuing technique for optimized results.

- The article by Oluwatobi, Akande Noah, et al. [2] outlines the development of a system for detecting and counting vehicles, employing inductive loop technology. The system primarily consists of three components: the inductive loop section, the electronic vehicle detector section, and the counter section.

LITERATURE SURVEY

- The work proposed by Mudaliar, Shruthi, et al. [3] addresses parking system challenges by introducing an Internet of Things (IoT)-enabled mechanism for parking space allocation. Smart parking is achieved through the utilization of ultrasonic sensors, Arduino Uno, and a cloud server.

- Kanakaraja, P., et al. [4] have introduced a sophisticated parking system based on the Internet of Things (IoT) with control facilitated through a Smartphone Device. The system aims to provide a comprehensive parking solution for both commuters and vehicle owners. Its functionalities include reserving parking spaces, validating reserved users, identifying nearby vacant spaces based on vehicle length, and generating daily, weekly, and monthly usage reports.

FLOWCHART

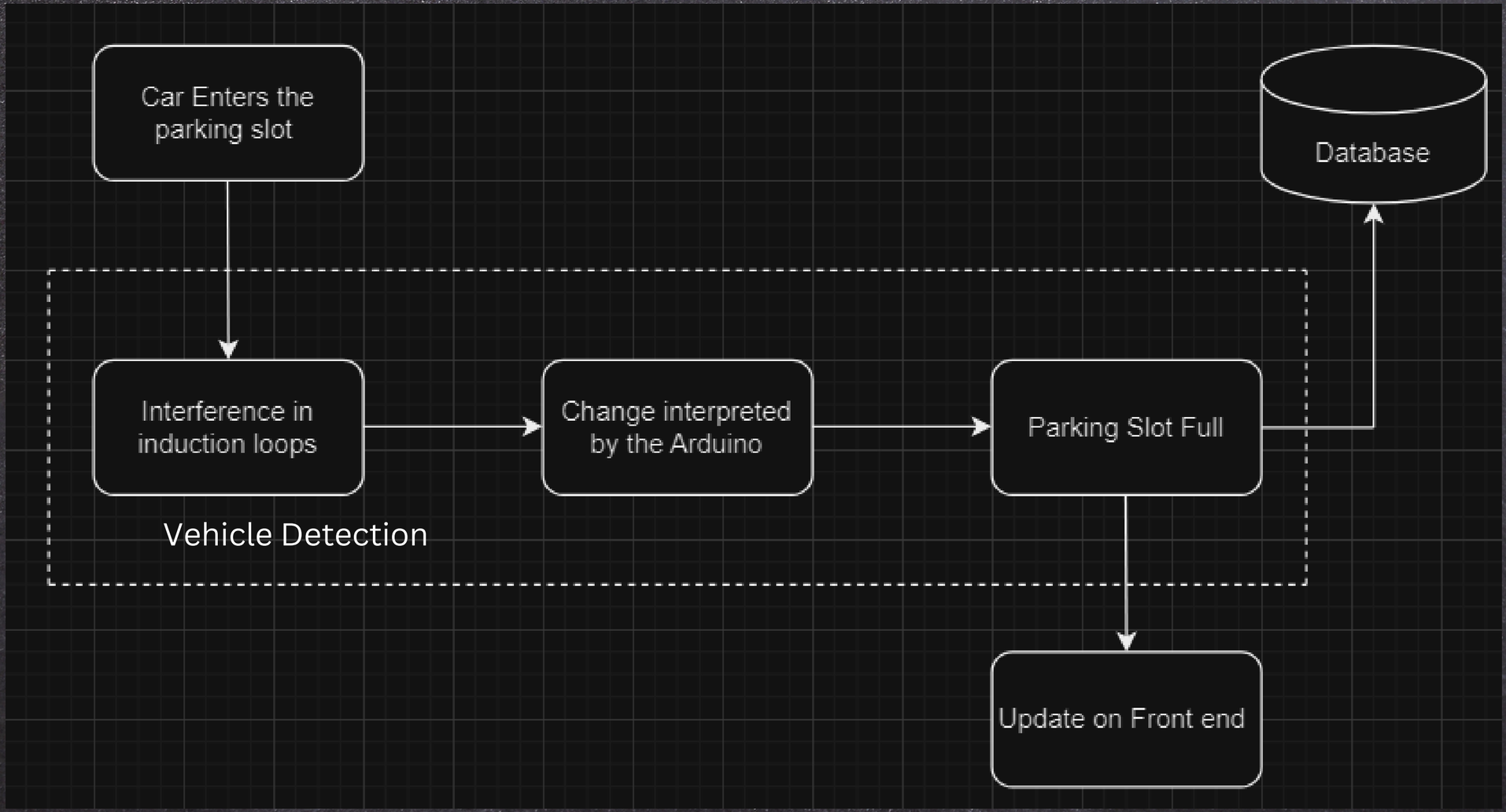
Car Enters the parking slot
Database
Interference in induction loops
Change interpreted by the Arduino
Parking Slot Full
Vehicle Detection
Update on Front end

COMPONENTS

The project will have the following hardware and software components

Hardware

- Arduino Uno
- Induction Loops
- Breadboard
- Electrical Components like
- resistors, capacitors, diodes etc.

Software

- Spring Boot
- MySQL
- Arduino IDE

DELIVERABLE

The end goal would be to create a smart automated parking system capable of informing the people of free parking slot in a big multi-level parking space.

This would ensure seamless operation without human help and would be helpful in creating an efficient and accurate system.

CIRCUIT SCHEMATIC

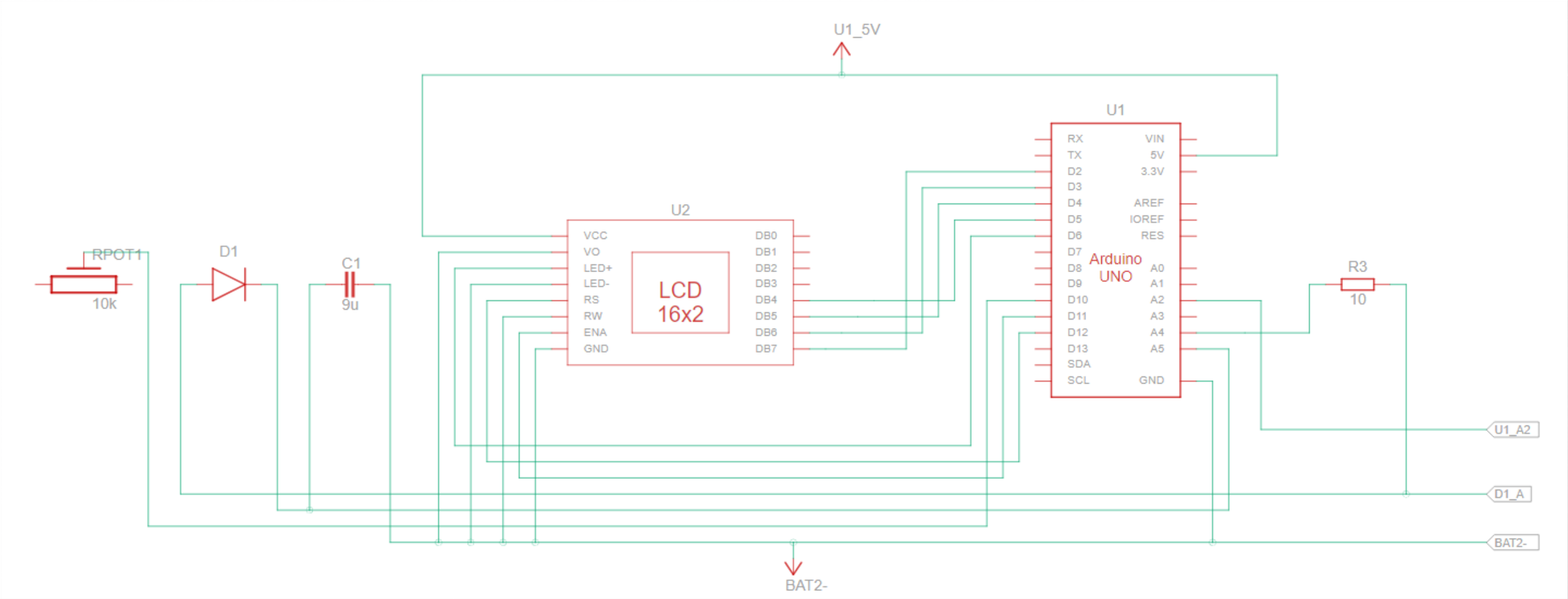

CIRCUIT SIMULATION

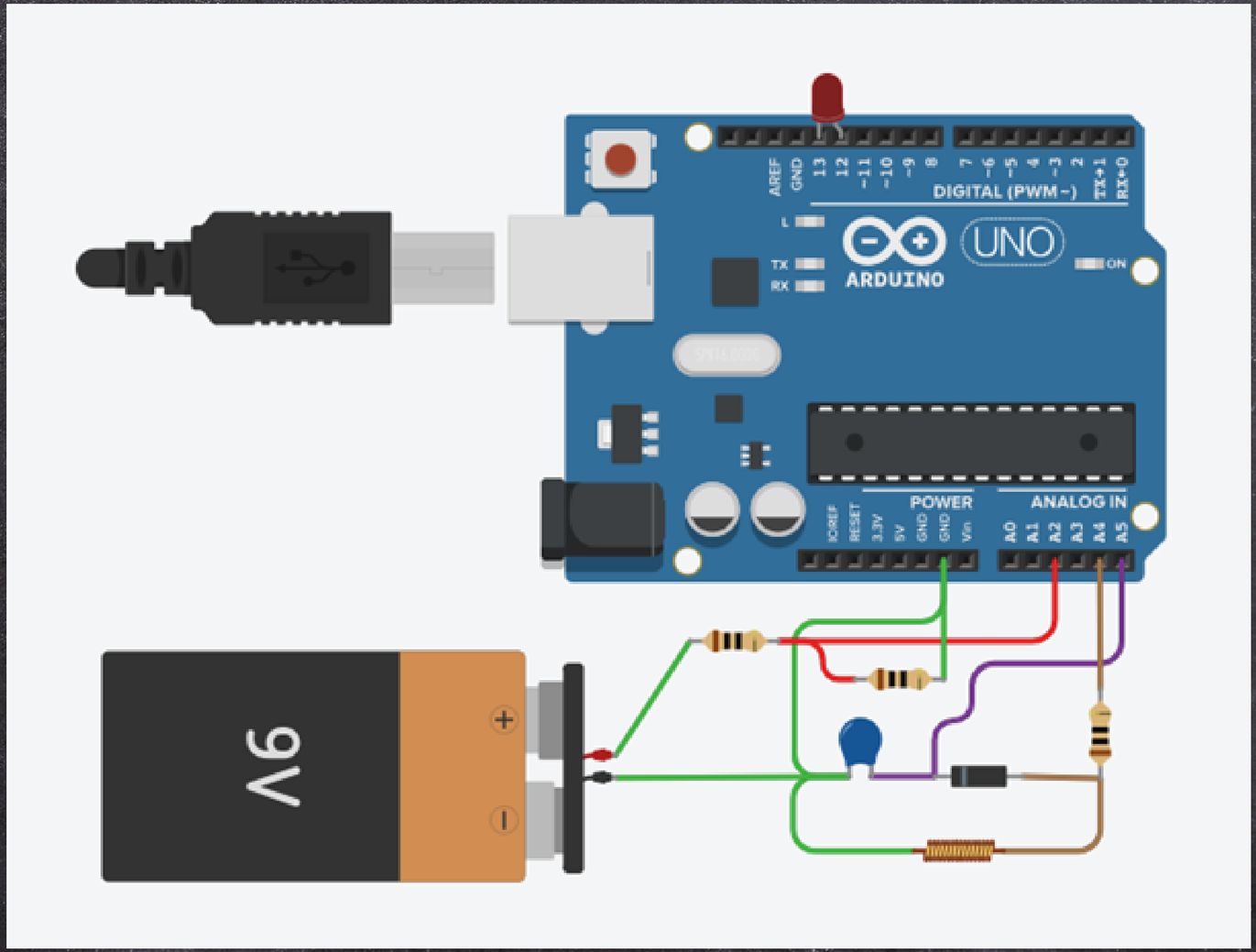

HARDWARE

Component	Quantity
Arduino Board	1N
Breadboard	1N
Connecting Wires	20-30
LED	1N
Induction Loop	1N
Arduino Cable	1N
Resistor	3N
Diode	1N
Capacitor	1N

HOW TO SETUP

Step 1 - Create the induction loop

The Induction loops are created using copper wires and connected to the Arduino using breadboard. A small Electric charge is also provided to the wire using a 9V battery. This will help in creating a magnetic field and detecting vehicles.

Step 2 - Setup the circuit

The smart parking system utilises a circuit that mainly consists of a capacitor, resistor, diode, LED and the induction loop. The circuit is setup and the connections are made as shown in the circuit diagram.

Step 3 - Detect the change in field

We will now create interference in the magnetic field using metallic objects and note down the change in the current value in the circuit

Step 4 - Update the changes

Everytime there is a change on the induction loop the Arduino will decide and interpret if the change represents a car leaving or entering. This change will be updated in the database and reflected on the front end and viewed by the user. Hence, they can park their car in the available parking slot accordingly.

BENEFITS

This Smart Automated system will help the people in the following ways :

1. Enhanced Accuracy of Managing Parking Effectively
2. Reduced Time Consumption
3. Streamlined Parking Management
4. Reduced Manual Labor
5. Resource Optimization
6. Environmental Impact Reduction

IMAGES/OUTPUTS

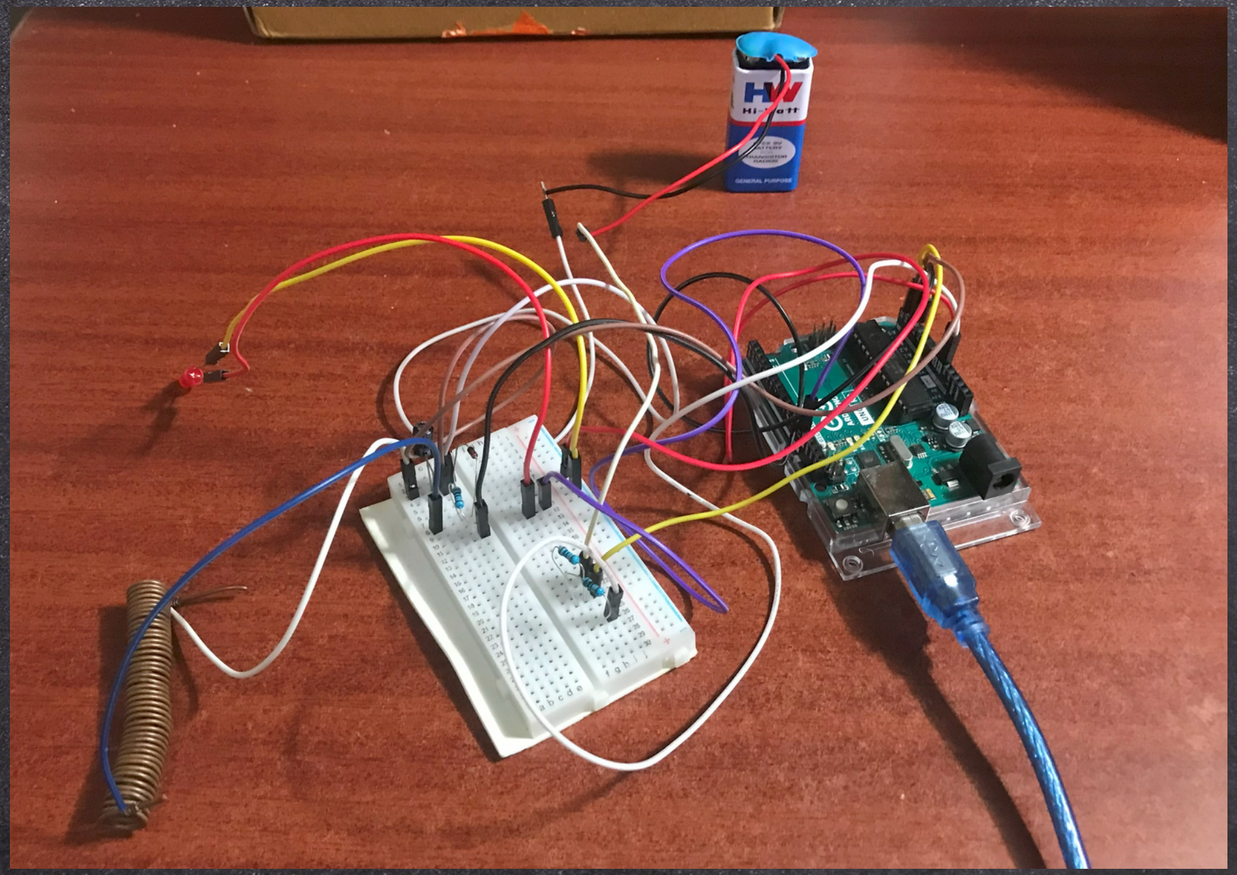

Hardware setup

IMAGES/OUTPUTS

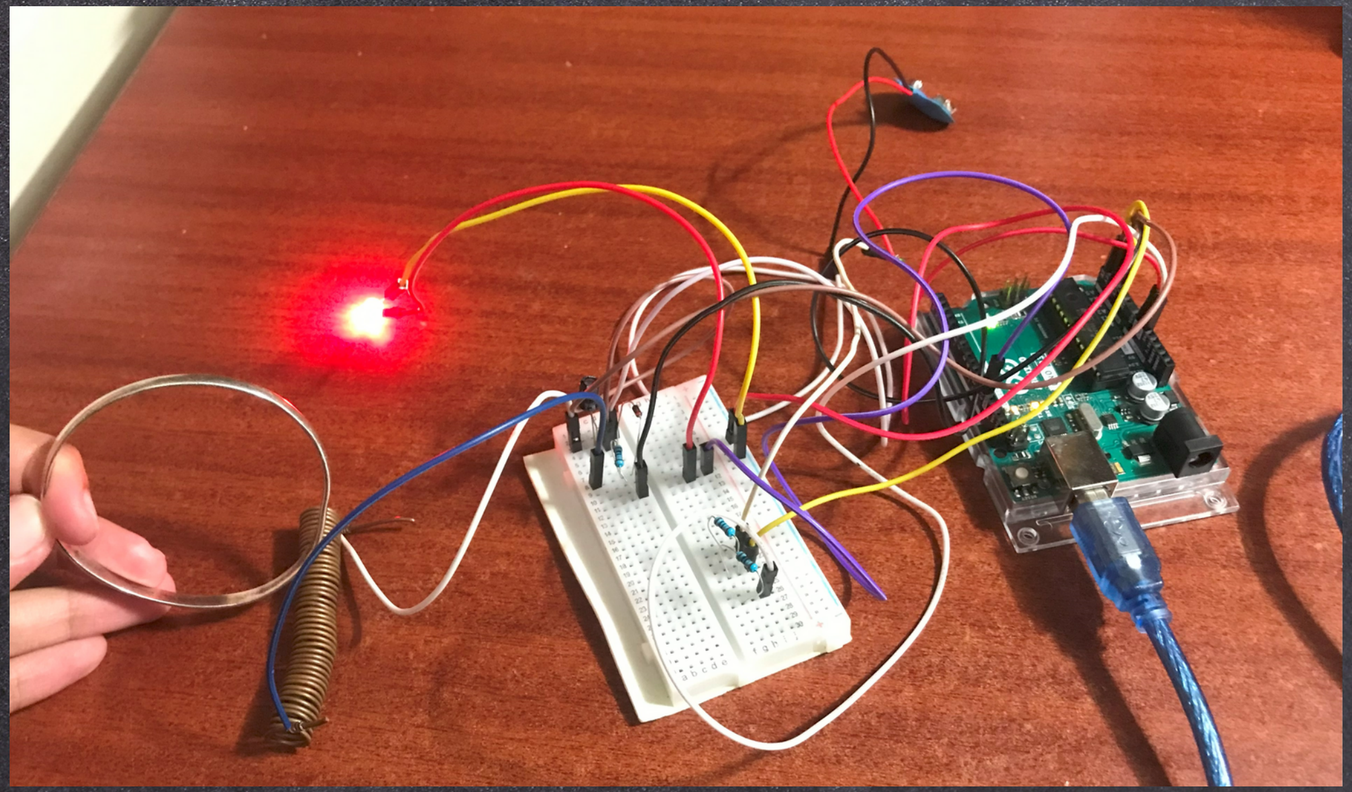

LED glows when metal nears IL detector

OUTPUTS

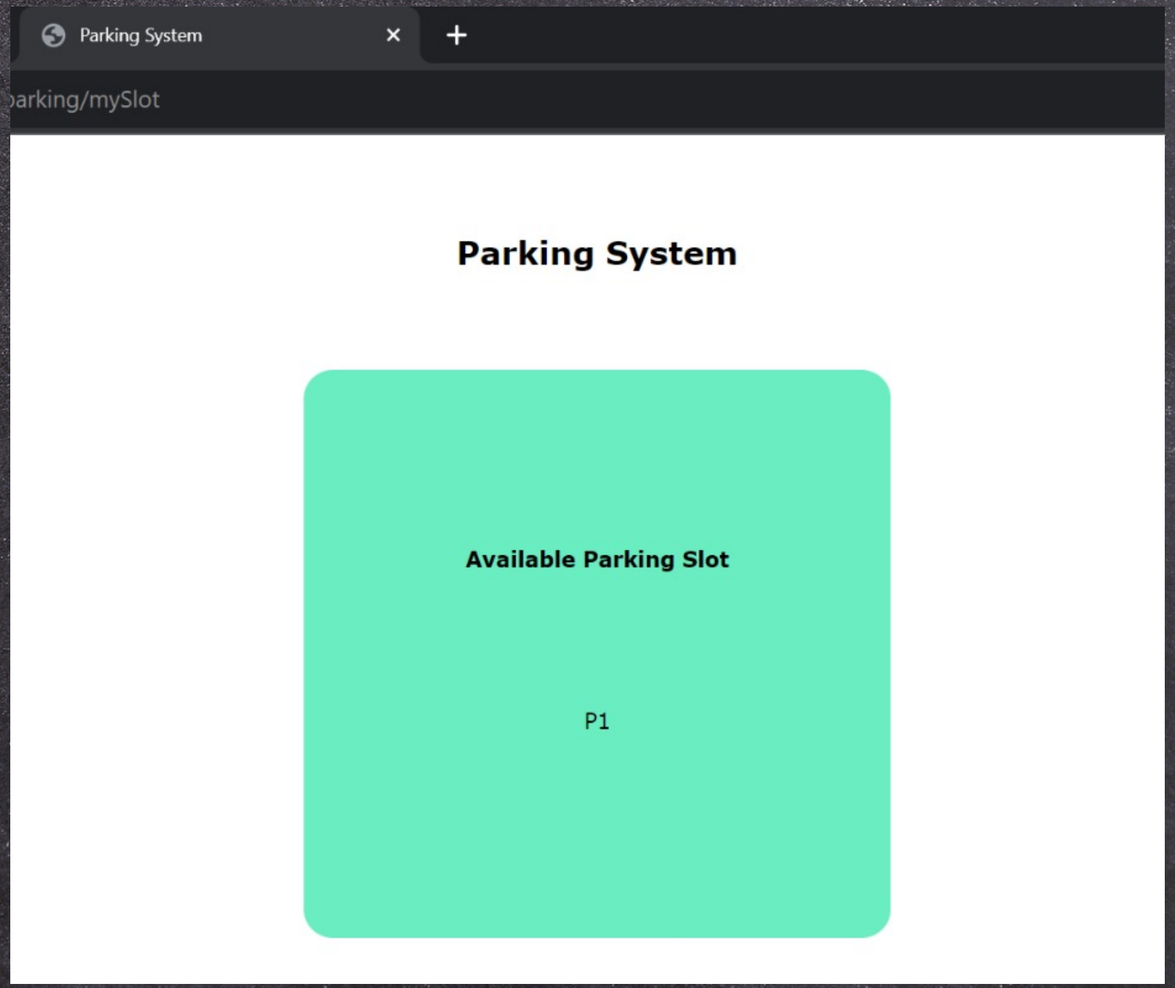

Parking slot assignment to user

OUTPUTS

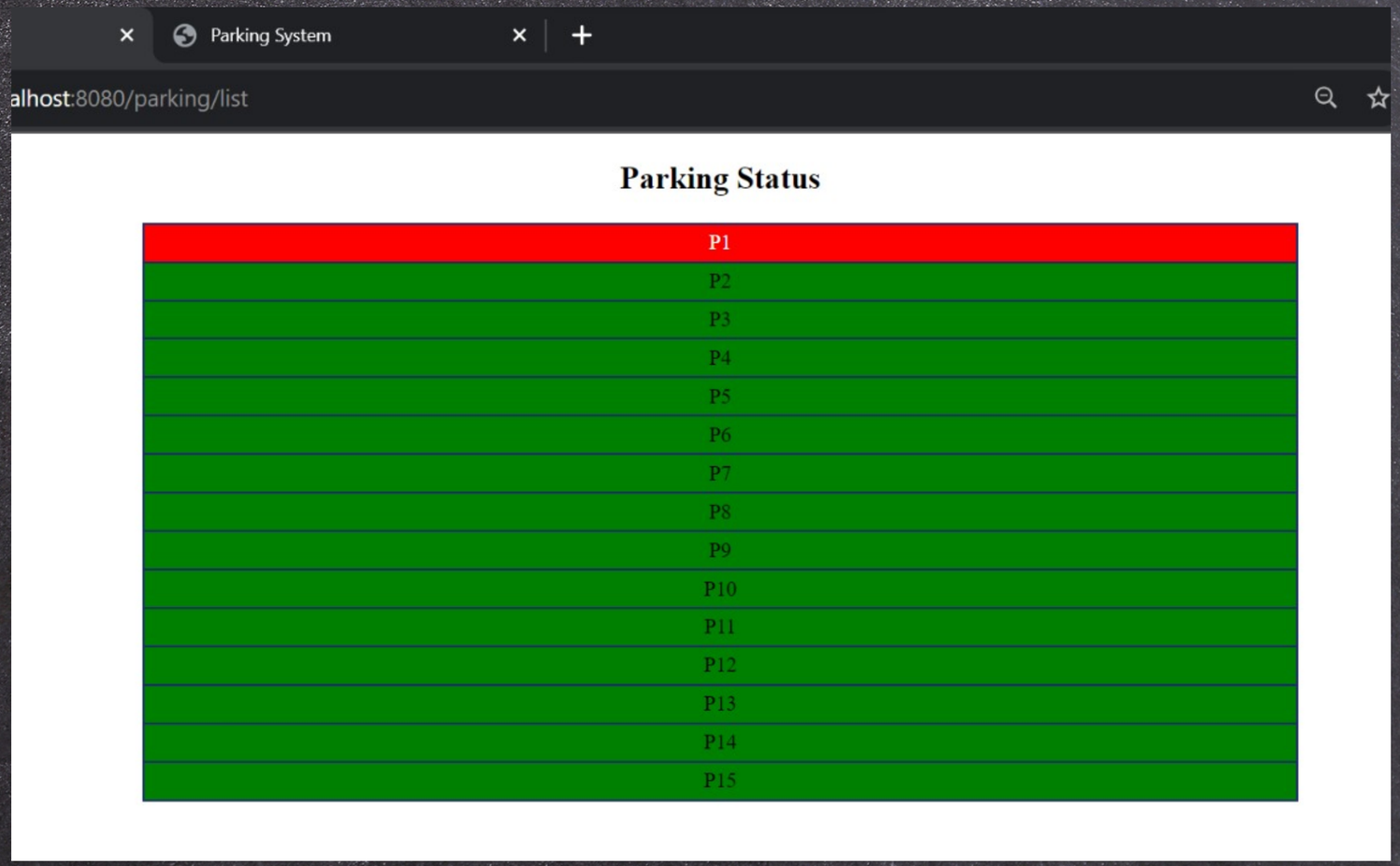

Parking status visible to admin

CONCLUSION

In conclusion, the Induction Loop-based Parking Detection System revolutionizes urban parking management. By employing advanced induction loop technology and real-time data analytics, it streamlines parking, reduces congestion, and empowers users and city planners alike. This project marks a significant leap towards creating smarter, more efficient, and sustainable urban environments by utilizing induction loop detectors, which has been unexplored in current techniques.

REFERENCES

Research work :

[1] Veeramanickam, M. R. M., et al. "IoT based smart parking model using Arduino UNO with FCFS priority scheduling." Measurement: Sensors 24 (2022): 100524.
[2] Oluwatobi, Akande Noah, et al. "The design of a vehicle detector and counter system using inductive loop technology." Procedia Computer Science 183 (2021): 493-503.
[3] Mudaliar, Shruthi, et al. "IoT based smart car parking system." Int J Sci Adv Res Technol 5.1 (2019): 270-272.
[4] Pavan, VNV Sai, N. V. Nishanth, and J. Kathirvelan. "Automation of vehicular parking using loop detector with single lane traffic: a design approach." International Journal of Engineering and Technology 5.3 (2013): 2471-2475.

Websites :

- https://escholarship.org/uc/item/8mh629c3
- https://youtu.be/DQfR7a1xctg

THANK YOU VERY MUCH!