Power

File: power.kicad_sch

Receiver

File: receiver.kicad_sch

Transmit

File: transmit.kicad_sch

TTL to RS485

File: ttl to rs485.kicad_sch

H1
MountingHole_Pad
GND

H2
MountingHole_Pad
GND

H3
MountingHole_Pad
GND

H4
MountingHole_Pad
GND

H5
MountingHole_Pad
GND

FID1
Fiducial

FID3
Fiducial

FID5
Fiducial

FID2
Fiducial

FID4
Fiducial

FID6
Fiducial

Designed by: Varun G
Xalten Systems Pvt. Ltd.

Sheet: /
File: PJ-005-B.kicad_sch

Title: Echosounder Transceiver

Size: A4	Date: 06-04-2026	**Rev: 0.1**
KiCad E.D.A. 9.0.7		Id: 1/8

LDO, 12V to 9V

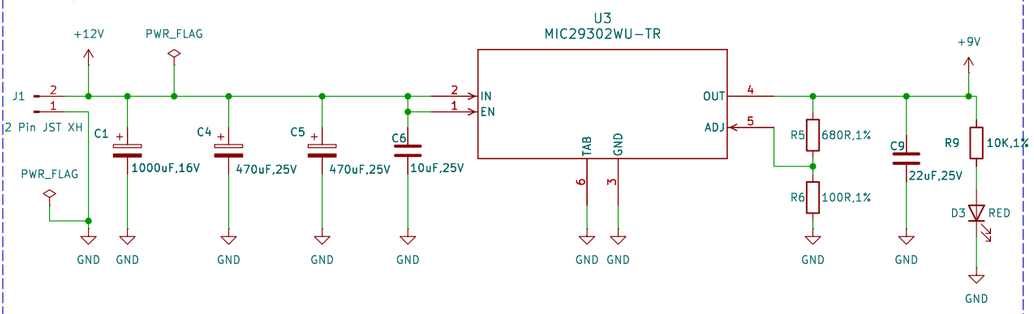

LDO, 5V to 2.5V

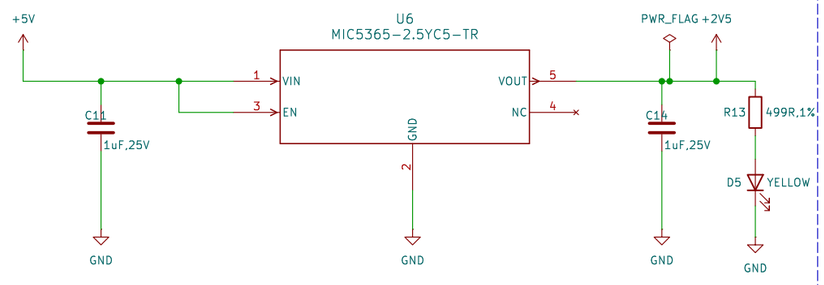

LDO, 9V to 6V

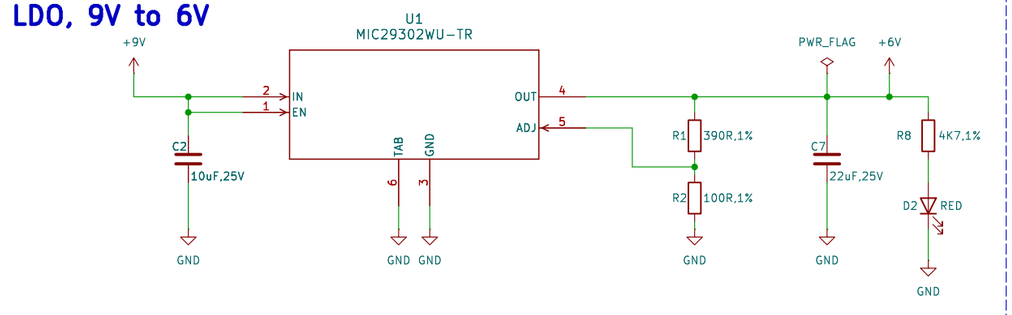

LDO, −5V to −2.5V

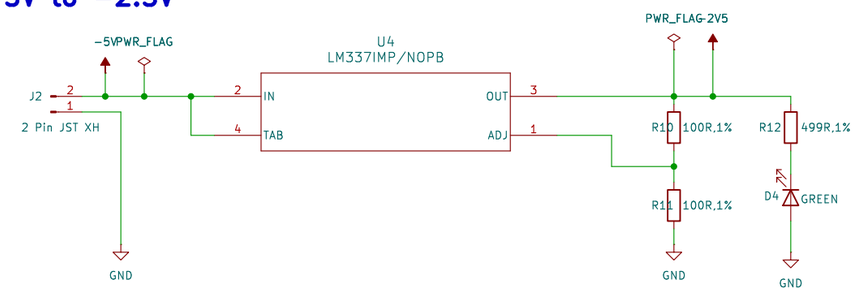

LDO, 6V to 5V

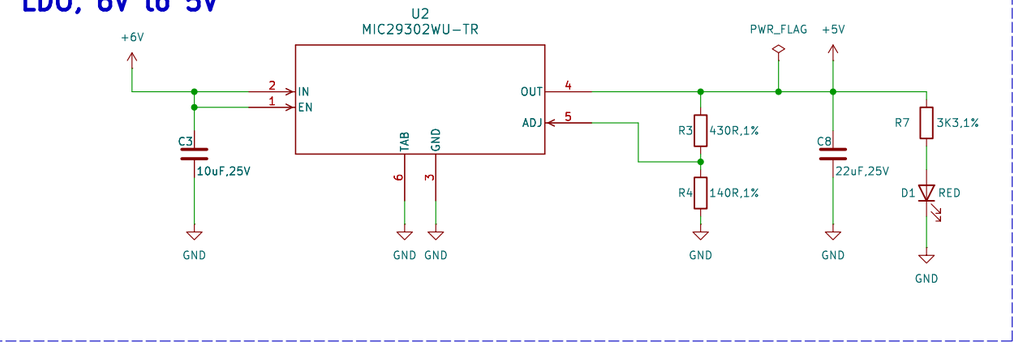

Reference Voltage, 1.65V

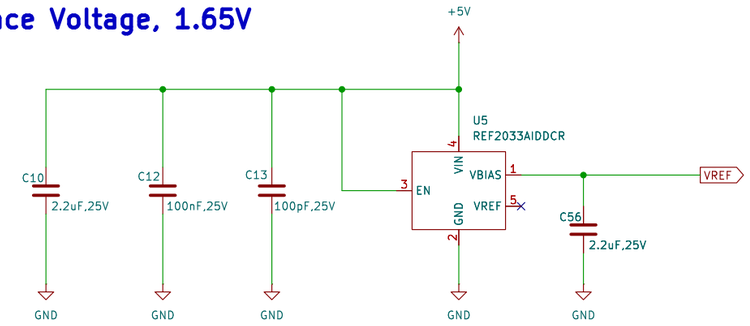

Designed by: Varun G
Xalten Systems Pvt. Ltd.

Sheet: /Power/
File: power.kicad_sch

Title: Echosounder Transceiver

Size: A3	Date: 06-04-2026	**Rev: 0.1**
KiCad E.D.A. 9.0.7		Id: 2/8

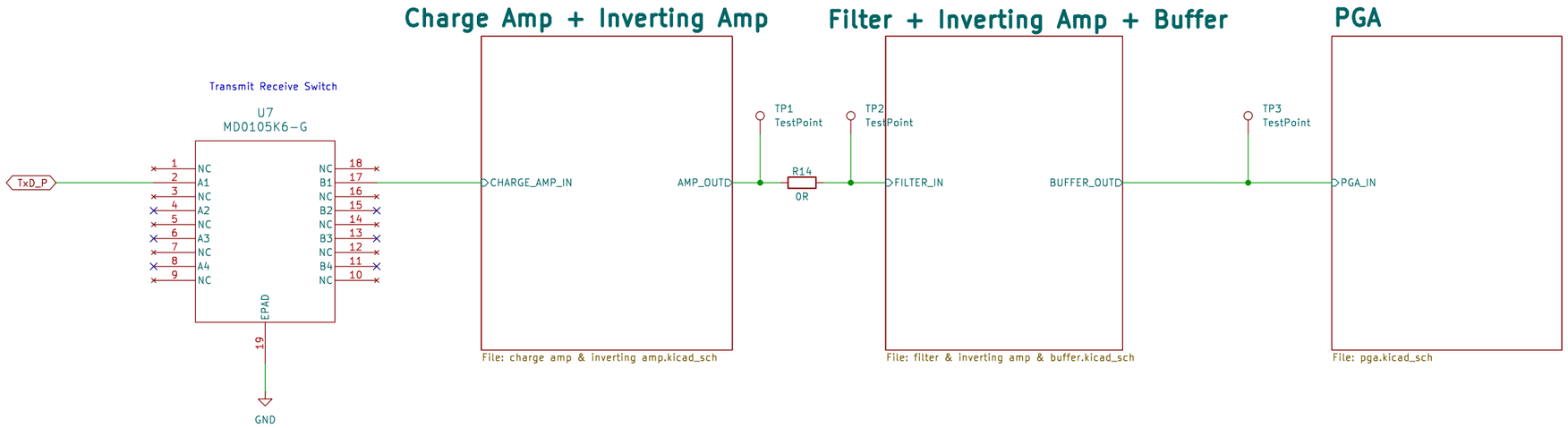

Designed by: Varun G
Xalten Systems Pvt. Ltd.

Sheet: /Receiver/
File: receiver.kicad_sch

Title: Echosounder Transceiver

Size: A3	Date: 06-04-2026	**Rev: 0.1**
KiCad E.D.A. 9.0.7		Id: 3/8

Charge Amplifier + Inverting Amplifier (10dB)

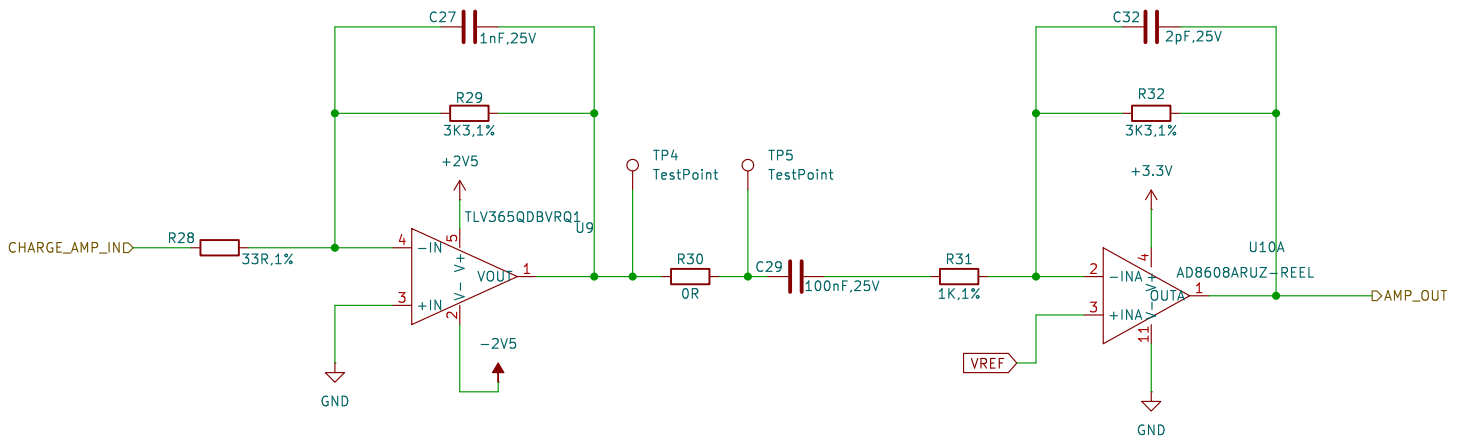

Designed by: Varun G
Xalten Systems Pvt. Ltd.

Sheet: /Receiver/Charge Amp + Inverting Amp/
File: charge amp & inverting amp.kicad_sch

Title: Echosounder Transceiver

Size: A4	Date: 06−04−2026	**Rev: 0.1**
KiCad E.D.A. 9.0.7		Id: 5/8

4th Order Band-Pass Filter

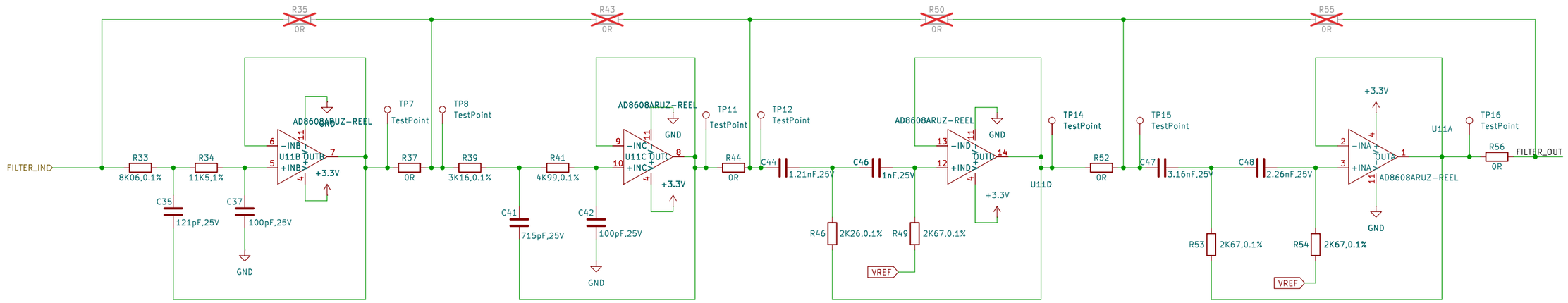

Inverting Amplifier (20dB) + Buffer

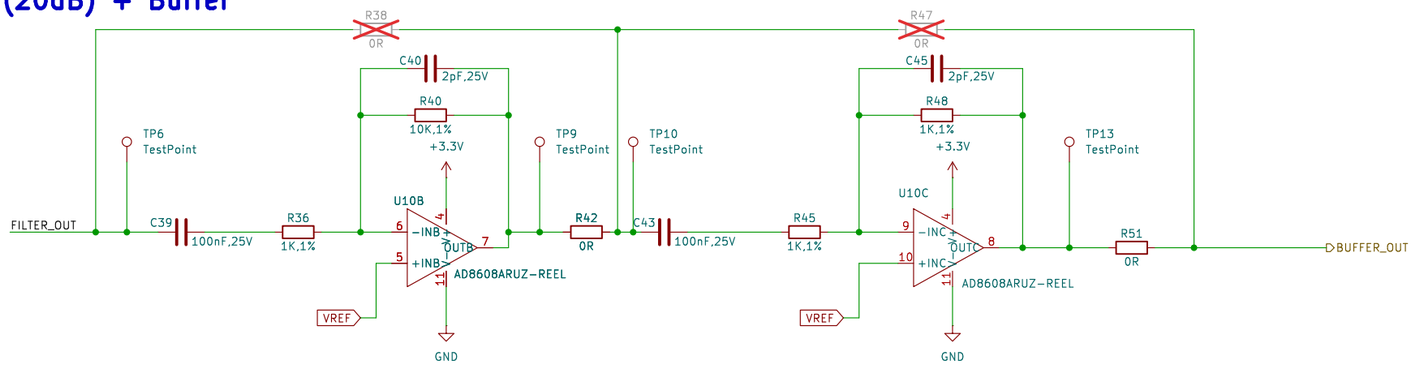

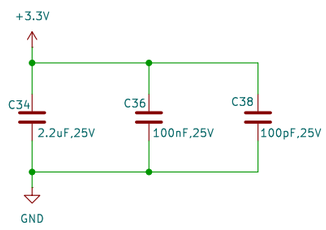

Designed by: Varun G
Xalten Systems Pvt. Ltd.
Sheet: /Receiver/Filter + Inverting Amp + Buffer/
File: filter & inverting amp & buffer.kicad_sch

Title: Echosounder Transceiver

Size: A3	Date: 06-04-2026	**Rev: 0.1**
KiCad E.D.A. 9.0.7		Id: 6/8

Programmable Gain Amplifier (1, 2, 4, 5, 8, 10, 16, 32 V/V)

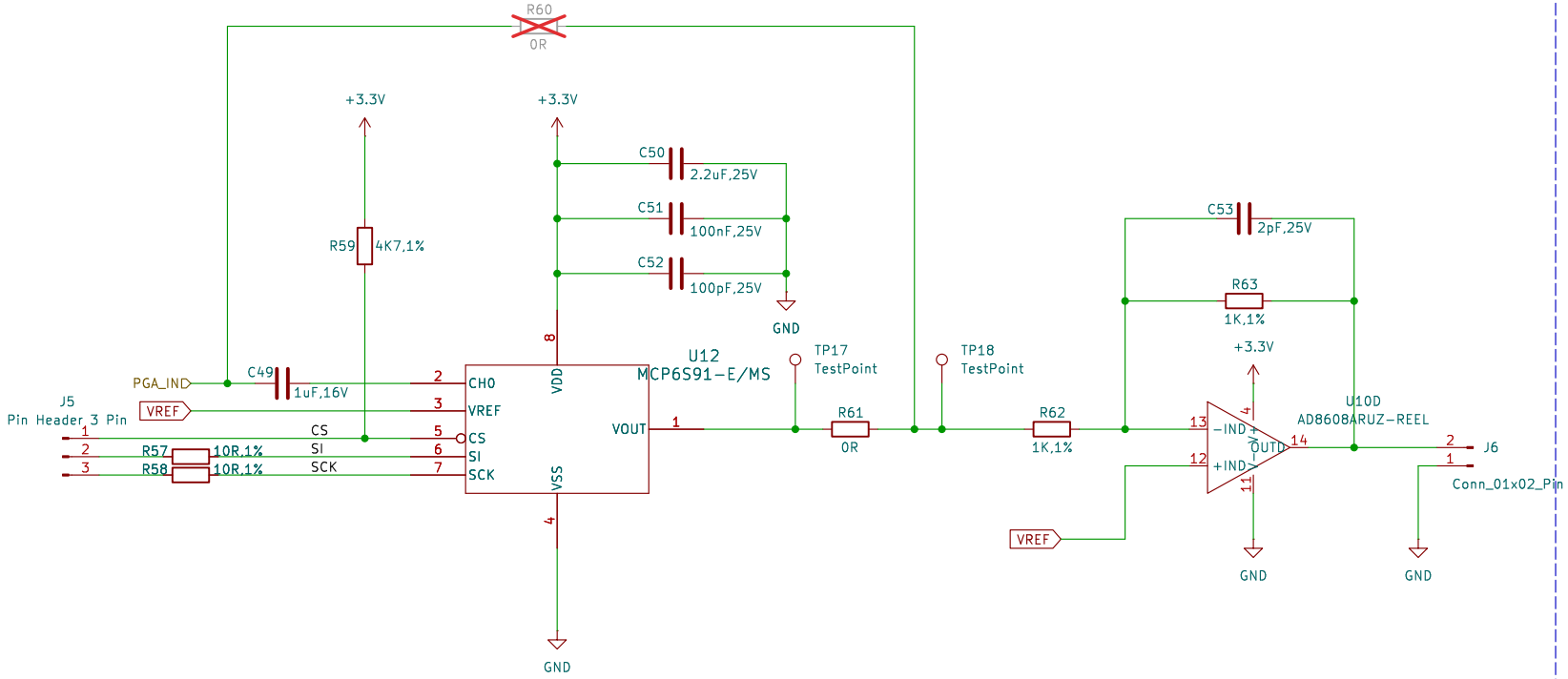

Designed by: Varun G
Xalten Systems Pvt. Ltd.
Sheet: /Receiver/PGA/
File: pga.kicad_sch

Title: Echosounder Transceiver

Size: A4	Date: 06-04-2026	**Rev: 0.1**
KiCad E.D.A. 9.0.7		Id: 7/8

Push Pull Stage

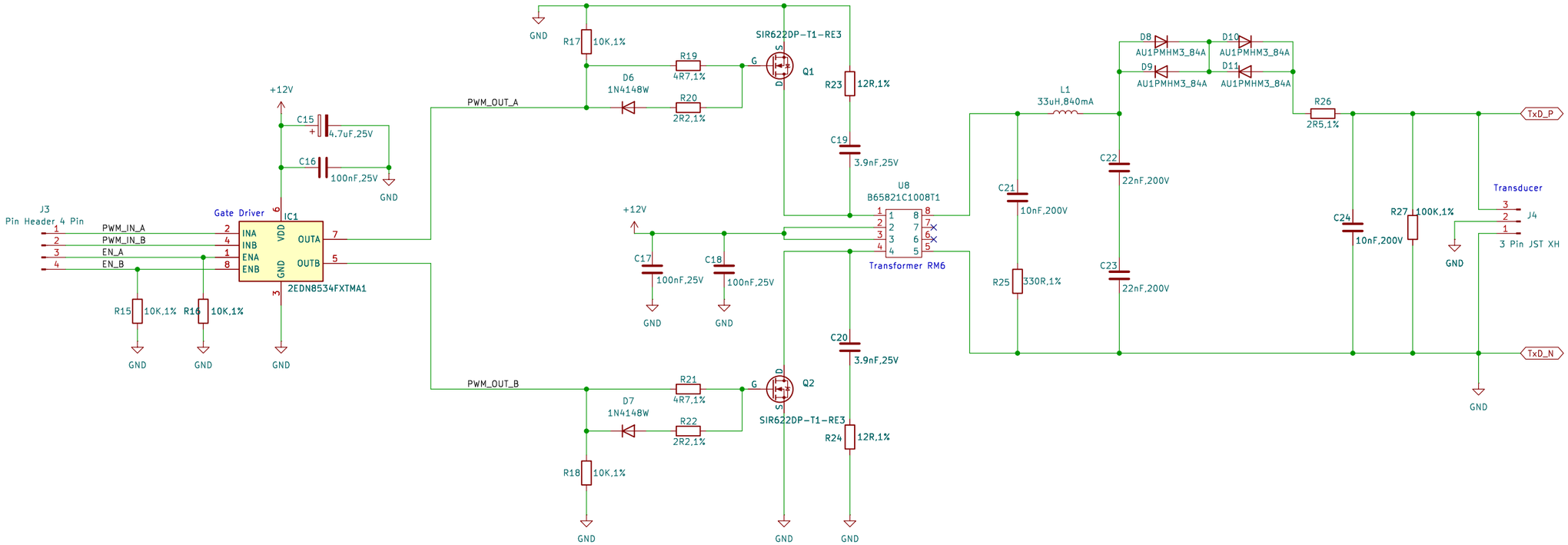

Layout Considerations
==========

-- Remove filled zones beneath transformer

Designed by: Varun G
Xalten Systems Pvt. Ltd.

Sheet: /Transmit/
File: transmit.kicad_sch

Title: Echosounder Transceiver

Size: A3	Date: 06-04-2026	**Rev: 0.1**
KiCad E.D.A. 9.0.7		Id: 4/8

TTL to RS485

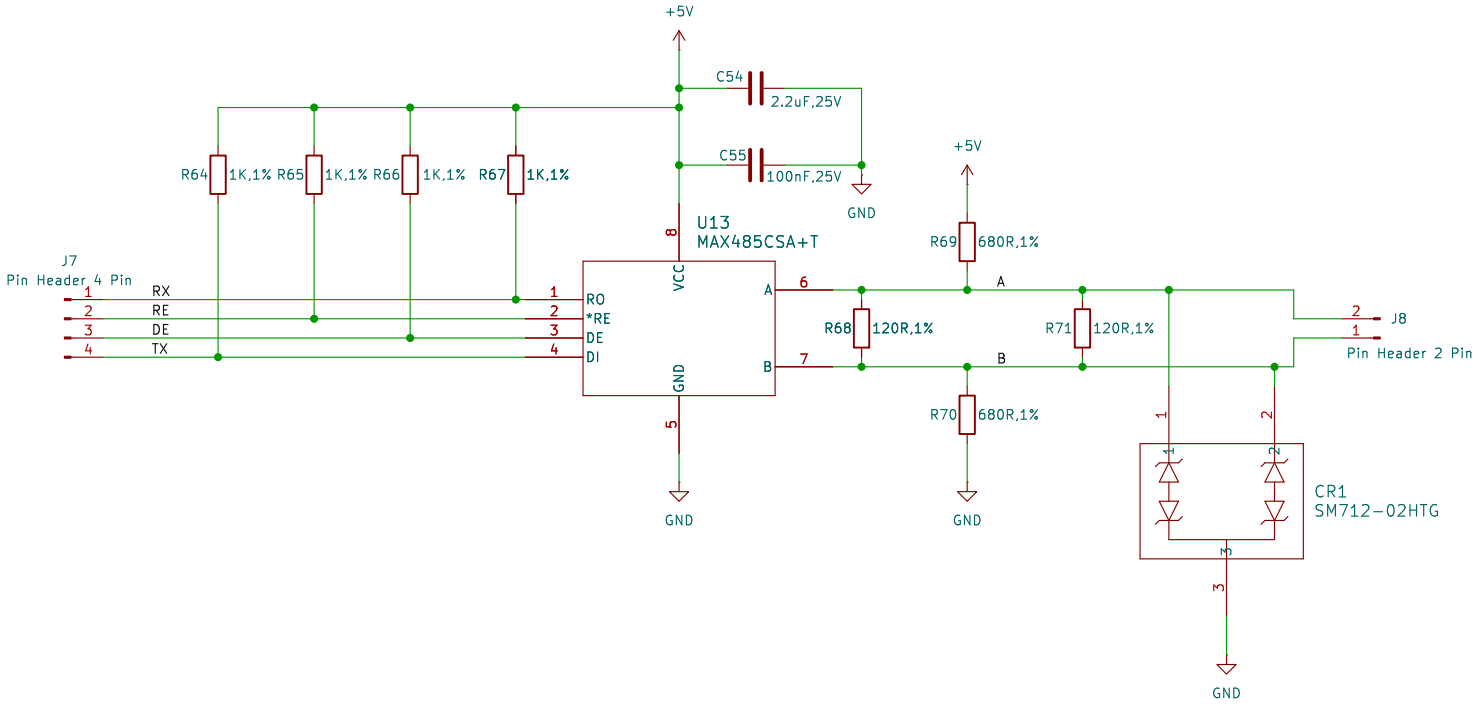

Layout Considerations
==========

-- AB lineas are differential with 120R impedance
-- Of the two termination resistors(R25 & R26), one should be place close to the connector and one close to the IC
-- Label all connectors

Designed by: Varun G
Xalten Systems Pvt. Ltd.

Sheet: /TTL to RS485/
File: ttl to rs485.kicad_sch

Title: Echosounder Transceiver

Size: A4	Date: 06-04-2026	**Rev: 0.1**
KiCad E.D.A. 9.0.7		Id: 8/8