Power

File: power.kicad_sch

Receiver

File: receiver.kicad_sch

Transmit

File: transmit.kicad_sch

TTL to RS485

File: ttl to rs485.kicad_sch

H1
MountingHole_Pad
GND

H2
MountingHole_Pad
GND

H3
MountingHole_Pad
GND

H4
MountingHole_Pad
GND

H5
MountingHole_Pad
GND

FID1
Fiducial

FID3
Fiducial

FID5
Fiducial

FID2
Fiducial

FID4
Fiducial

FID6
Fiducial

Designed by: Varun G
Xalten Systems Pvt. Ltd.

Sheet: /
File: PJ-005-B.kicad_sch

Title: Echosounder Transceiver

Size: A4	Date: 06-04-2026	**Rev: 0.1**
KiCad E.D.A. 9.0.7		Id: 1/5

LDO, 12V to 9V

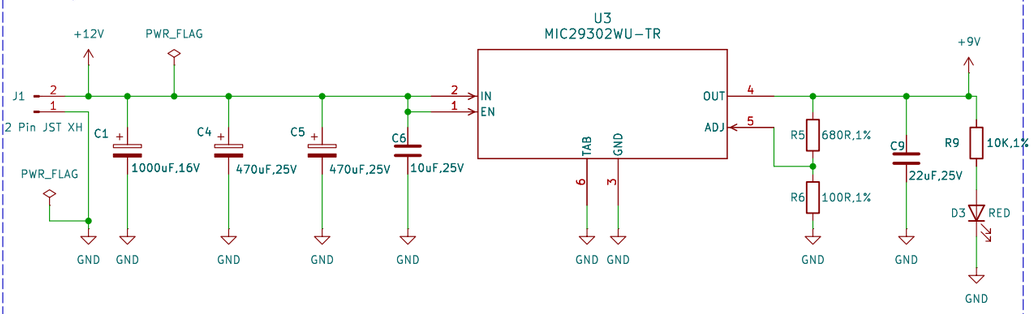

LDO, 5V to 2.5V

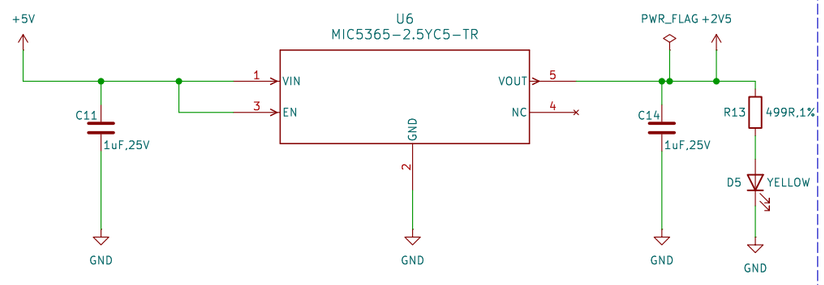

LDO, 9V to 6V

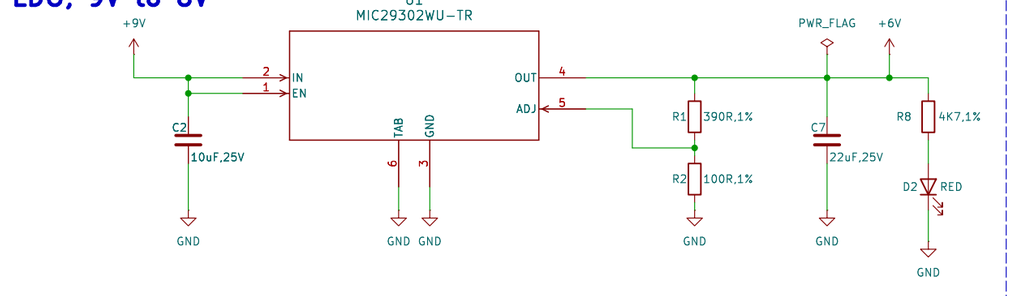

LDO, -5V to -2.5V

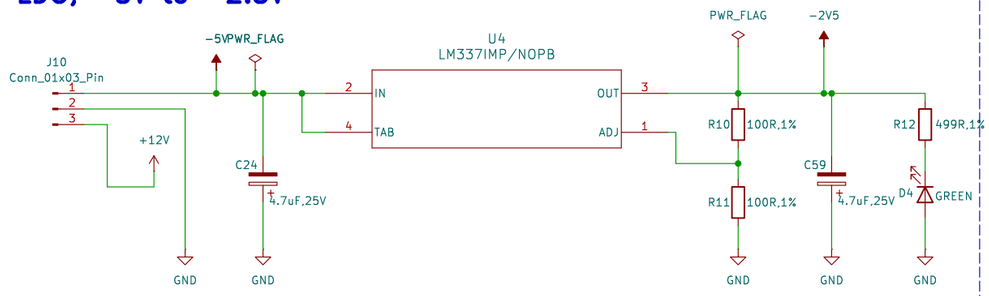

LDO, 6V to 5V

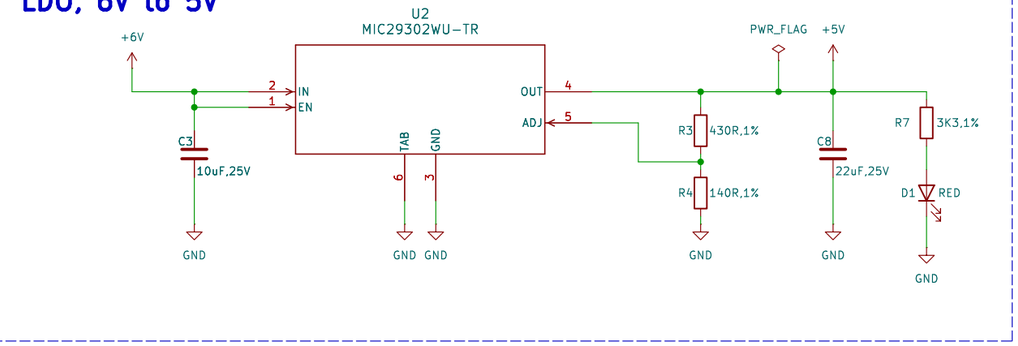

Designed by: Varun G
Xalten Systems Pvt. Ltd.

Sheet: /Power/
File: power.kicad_sch

Title: Echosounder Transceiver

Size: A3	Date: 06-04-2026	**Rev: 0.1**
KiCad E.D.A. 9.0.7		Id: 2/5

Transmit Receive Switch + Charge Amplifier

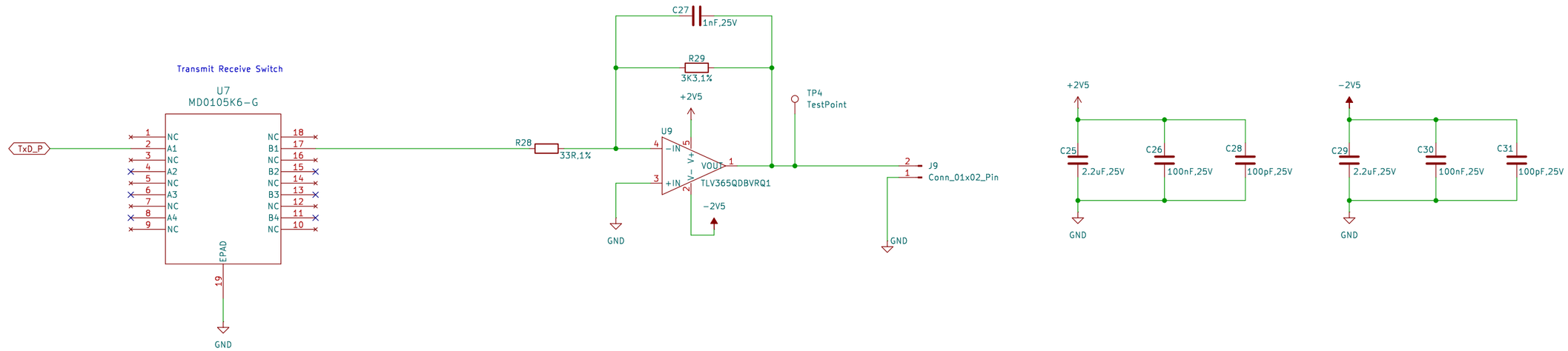

Designed by: Varun G
Xalten Systems Pvt. Ltd.

Sheet: /Receiver/
File: receiver.kicad_sch

Title: Echosounder Transceiver

Size: A3	Date: 06-04-2026	**Rev: 0.1**
KiCad E.D.A. 9.0.7		Id: 3/5

Push Pull Stage

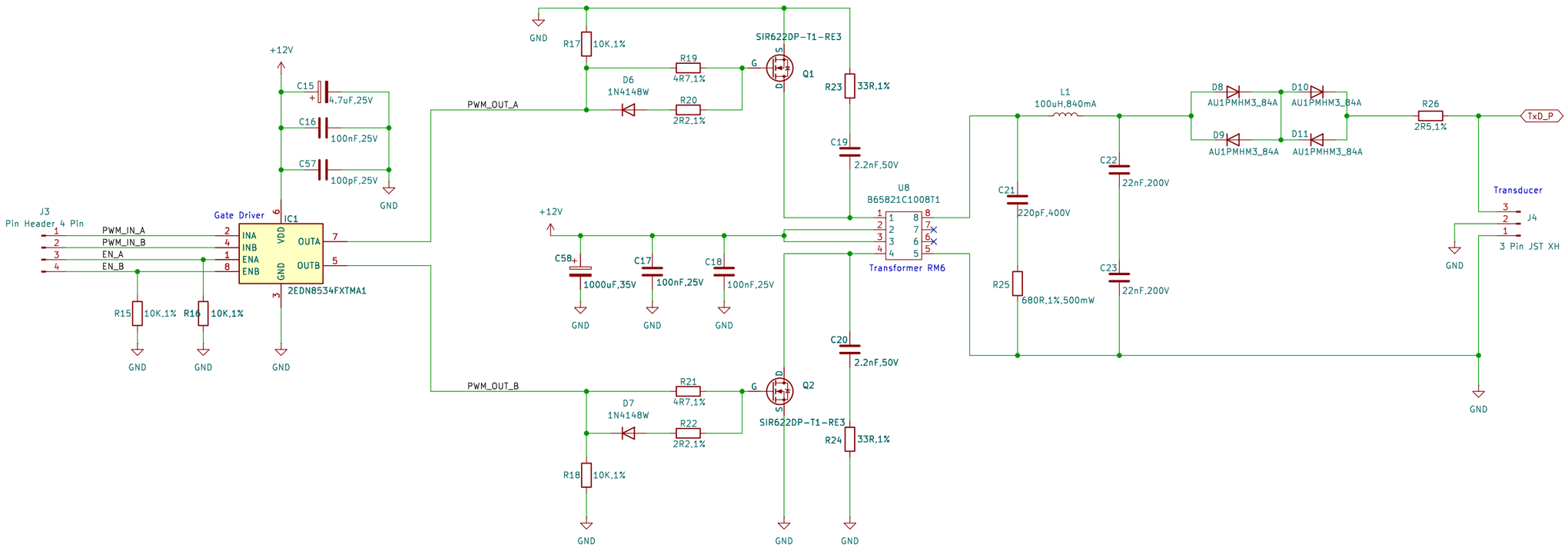

Layout Considerations
==========

-- Remove filled zones beneath transformer

Designed by: Varun G
Xalten Systems Pvt. Ltd.

Sheet: /Transmit/
File: transmit.kicad_sch

Title: Echosounder Transceiver

Size: A3	Date: 06-04-2026	**Rev: 0.1**
KiCad E.D.A. 9.0.7		Id: 4/5

TTL to RS485

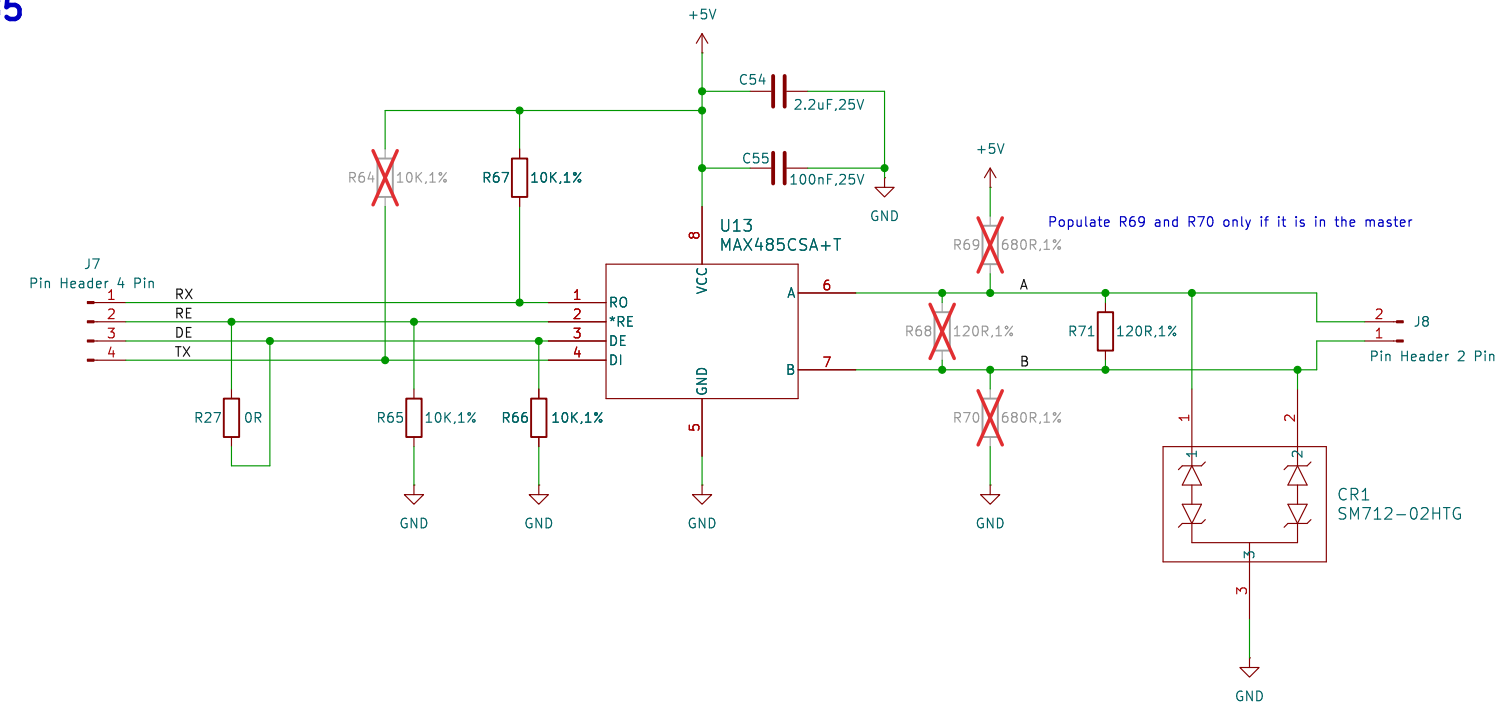

Layout Considerations
==========

-- AB lineas are differential with 120R impedance
-- Of the two termination resistors(R25 & R26), one should be place close to the connector and one close to the IC
-- Label all connectors
-- Place CR1 close to the connector
-- Keep the trace length of AB lines short

Designed by: Varun G
Xalten Systems Pvt. Ltd.
Sheet: /TTL to RS485/
File: ttl to rs485.kicad_sch

Title: Echosounder Transceiver

Size: A4	Date: 06-04-2026	**Rev: 0.1**
KiCad E.D.A. 9.0.7		Id: 8/5