Structural and Dynamic Analysis of a Vegetable Selling Vehicle Carrier: An FEM-Based Approach for Design Optimization and Ergonomic Enhancement

Varun Teli[a)], Aslam[b)], Rohamgowda Patil[c)] Swaroop[d)], Adarsh Patil[e)], Shivanand P [f)]

Department of Mechanical Engineering KLE Technological University Hubli

[h)] *Corresponding Author: adarsh@kletech.ac.in*
[a)] *varunteli121@gmail.com,* [b)]*rnkhazi2004@gmail.com,* [c)]*msridharrao22@gmail.com*
[d)]*susheelshirashyad@gmail.com,* [e)]*akshaykulkarni814@gmail.com,*[f)]*irannaathani2@gmail.com*

Abstract: Daily, mobile vending vehicles are subjected to different kinds of mechanical loads both static and dynamic that affect their structural strength and durability. The scientists simulated a detailed Finite Element Analysis (FEA) on a 3D model of a vegetable selling vehicle carrier which is a Tata Ace platform-mounted to measure the stress distribution and accordingly enhance the performance under the real loading conditions. The static structural analysis through the finite element method has shown that the maximum stress regions are mostly the rack and the frame joints which are heavy-duty parts for carrying the weight of the produce and providing system stability during the operation. In addition, modal analysis discovered the natural frequencies and the mode shapes of the carrier framework thus the behavior of the structure under engine vibration and bumpy road conditions was better understood. The findings established linkages between the stressful zones and the geometrical stiffness changes indicating that dynamic resonance would have the effect of intensifying localized fatigue if the areas were not properly optimized. The outcome of the last model through topology optimization and ergonomic assessment facilitates the betterment of load distribution, lessening of the weight, and enhancement in user comfort, thus, it is an indispensable step in the creation of the next design stages and development of mobile vending systems that are eco-friendly

.

Keywords: STATIC STRUCTURAL, VEHICLE DYNAMICS, FINITE ELEMENT ANALYSIS, TOPOLOGY OPTIMIZATION, ERGONOMIC DESIGN.

1. INTRODUCTION

Vegetable vending vehicles are the main mobile distribution systems which bring fresh vegetables to the consumers in a very lively manner. Just like biological load-bearing systems, the structural framework of these carriers has to balance stability, flexibility, and endurance under different static and dynamic loads. The vegetable selling carrier, which is mounted on a Tata Ace platform, acts as a multifunctional structure that integrates racks, trays, and ergonomic seating arrangements, each of which experiences different types of stresses during transportation, loading, and unloading. The performance of the system is determined by its capability to retain firmness under the weight of the produce, to resist the wear caused by vibrations, and to provide the vendor with the comfort necessary for operations.

Finite Element Analysis (FEA) is an engineering tool that can be used to great effect when evaluating and optimizing the mechanical response of such systems under real-life conditions. FEA facilitates the locating of the most essential stress zones and deformation directions by determining the areas subjected to load both static and dynamic. Thus, design modifications can ensure both safety and efficiency. The work presented here involves static structural and modal analyses on the 3D model of the carrier to get a deeper understanding of the stress distribution, deformation, and structural response under vehicular vibrations and impact of the road.

Fig. 1: Concept layout of the Tata Ace vegetable selling carrier

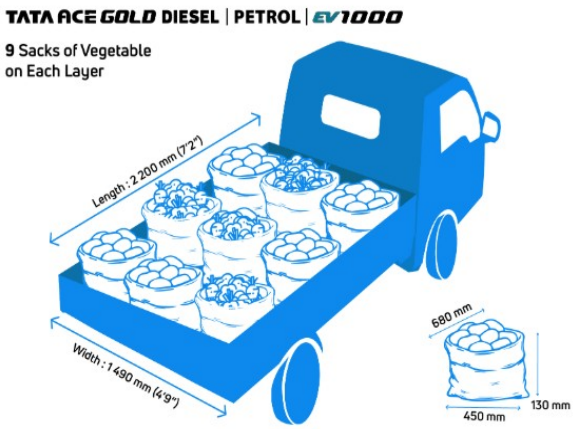

Fig. 1

Fig. 1 illustrates the conceptual arrangement of the vehicle carrier, with the vendor positioned centrally, surrounded by modular racks on either side and a display tray in front. Static analysis defines the effect of distributed loads and boundary constraints during stationary operations, while modal analysis determines the system's natural frequencies and mode shapes to predict vibration performance. The evaluation of fatigue and long-term structural integrity under repetitive loading further ensures safety and durability during extended market operations.

The integration of static and dynamic simulation results offers a comprehensive understanding of the carrier's mechanical behavior. These insights support design improvements for optimized material selection, reduced structural mass, and enhanced user ergonomics. Consequently, the study not only contributes to engineering optimization but also supports social sustainability by improving vendor safety, comfort, and efficiency in day-to-day operations.

2. LITERATURE SURVEY

Mobile vending systems, like vegetable selling carriers, operate as complex mechanical and socio-economic systems that merge structural performance with human usability. Their design involves multiple sub-systems including the frame, tray assembly, rack structure, and ergonomic workspace, each subjected to variable loads and environmental conditions. Previous studies have emphasized that efficient design and structural reliability are essential to achieving operational stability, product safety, and long service life under fluctuating conditions of motion and weight distribution.

The research by BISHSS_008_158 (2019) investigated India's agricultural logistics and highlighted the urgent need for low-cost, mobile solutions to reduce post-harvest losses and support rural-to-urban market connectivity. Their findings support the integration of modular rack and tray systems in compact vehicles for short-distance produce delivery. Similarly, AJARD (2011) examined mobile vegetable vendors in Magelang, Indonesia, emphasizing how vendor-customer interaction, display accessibility, and mobility directly influence sales effectiveness and product quality. These findings form the basis for designing user-centered vending carriers with improved ergonomics and accessibility.

From an engineering design perspective, Gustafson (1952) established foundational principles for lightweight structural design in mobile systems, introducing the concept of stiffness-to-weight optimization, which remains applicable in modern FEA-based modeling. SSRN-1542359 (2010) explored the service quality of transportation carriers, focusing on the correlation between mechanical reliability, vibration performance, and customer satisfaction—highlighting that dynamic stability directly impacts service efficiency. Furthermore, the 15020021 study (2015) demonstrated how modular structural design and frame optimization can improve load handling capacity while reducing material consumption through iterative stress-based modeling.

Finite Element Analysis (FEA) has become an essential tool for evaluating the strength and deformation characteristics of such mechanical systems. Studies on small commercial vehicles and agricultural carriers

indicate that FEA effectively predicts critical load regions and deformation patterns, enabling safer and lighter design configurations. For instance, lightweight aluminum and steel composite frameworks have been shown to achieve up to 25% reduction in structural mass while maintaining sufficient rigidity under distributed loading (BISHSS_008_158; Gustafson, 1952). Dynamic simulations also revealed that natural frequency optimization minimizes vibration effects during transport, which is particularly important for perishable produce and vendor comfort.

In addition to structural performance, ergonomics plays a crucial role in determining the usability and safety of vending carriers. Research by AJARD (2011) and subsequent case studies in rural Indonesia emphasized that the vendor's sitting posture, workspace reach, and load accessibility significantly affect occupational fatigue and sales efficiency. Integrating ergonomic analysis with FEA allows designers to validate not only the strength but also the human adaptability of the system.

The literature collectively indicates a research gap between theoretical FEA-based optimization and real-world ergonomic applications for mobile vending vehicles. Therefore, the present study combines both domains — applying static and dynamic simulations to ensure mechanical safety while incorporating ergonomic principles that enhance vendor comfort and market effectiveness.

3. MATERIAL PROPERTIES

Accurate representation of material behavior serves as a fundamental requirement for finite element analysis (FEA) when modeling mechanical systems, especially those subjected to complex static and dynamic loading conditions such as vehicle-mounted carriers. Correct material definitions enable precise prediction of stress distribution, deformation, and fatigue performance under varying operational forces such as payload weight, vibration, and road impacts.

This study employed linear elastic, homogeneous, and isotropic material models for the carrier frame and rack assemblies to simplify computational requirements while ensuring realistic structural response. Such simplifications are widely used in early-stage mechanical design analysis and yield reliable results for comparing material alternatives. Material selection was guided by structural integrity, manufacturability, and operational efficiency requirements specific to mobile vending applications.

3.1 Structural Frame Material Properties

The primary frame structure was modeled using *Structural Steel (ASTM A36)* due to its superior stiffness, high load-carrying capability, and weldability. The material's mechanical characteristics accurately represent the rigid structural behavior necessary for maintaining geometric stability under distributed loads caused by vegetable trays and vendor weight.

The steel's mechanical properties include a Young's Modulus of 200 GPa and a Poisson's Ratio of 0.3, resulting in a Shear Modulus (G) of 76.9 GPa and a Bulk Modulus (K) of 166.7 GPa. The density of 7850 kg/m³ provides sufficient base weight to resist vibration and overturning without excessive vehicle load. The alloy composition, as defined by ASTM A36 standards (0.25% Carbon, 1.2% Manganese, trace Silicon), ensures high fatigue life and good weldability—key requirements for modular carrier fabrication.

3.2 Rack and Tray Material Properties

The racks and trays were modeled using *Aluminum Alloy 6061-T6* due to its favorable strength-to-weight ratio and resistance to corrosion, which are vital for outdoor vending environments. The lightweight nature of aluminum reduces the overall carrier mass and enhances vehicle performance while maintaining adequate strength to support vegetable loads.

The mechanical properties of Al6061-T6 include a Young's Modulus of 69 GPa and a Poisson's Ratio of 0.33, resulting in a Shear Modulus (G) of 25.94 GPa and a Bulk Modulus (K) of 76.7 GPa. The density is 2700 kg/m³, and the yield strength is 150 MPa, ensuring the rack system can endure repeated loading cycles without permanent deformation. Compositionally, Aluminum 6061 contains approximately 97% Aluminum, 1% Magnesium, and 0.6% Silicon, offering good tensile strength, machinability, and fatigue resistance.

Table 3.1 Material properties the Vehicle Carrier Components.

Material	Young's Modulus (GPa)	Density (kg/m³)	Yield Strength (MPa)	Poisson's Ratio	Weight Reduction (%)
Structural Steel (ASTM A36)	200	7850	250	0.3	18
Stainless Steel 304	193	8000	215	0.29	15
Aluminum 6061	69	2700	150	0.33	25

Thus, these material properties enabled accurate FEA-based simulation of the vehicle carrier under both static and dynamic loading scenarios. The combination of high-stiffness structural steel for the frame and lightweight aluminum for racks ensured an optimal balance of strength, weight efficiency, and durability. This hybrid material configuration allowed safe load distribution, reduced vibration effects, and improved ergonomic usability for vendors during extended operation.

4. METHODOLOGY

The present study performs a refined finite element analysis (FEA) of a vehicle-mounted vegetable selling carrier to evaluate its mechanical behavior under static and dynamic loading conditions. The analysis aims to assess the structural integrity, load-carrying capability, and vibration resistance of the frame and rack assemblies. The workflow includes conceptual design, CAD modeling, material assignment, meshing, boundary condition definition, static structural and modal analyses, and topology optimization for improved strength-to-weight ratio.

4.1 Conceptual Design

The conceptual design phase began by defining functional and ergonomic requirements for a mobile vegetable vending carrier system. The primary objectives were:

- To develop a lightweight yet durable carrier capable of supporting distributed vegetable loads (~100–120 kg).
- To ensure easy mounting/dismounting from a two-wheeler or small utility vehicle.
- To provide modular trays and compartments for efficient sorting and display of vegetables.

Multiple design sketches were developed focusing on aerodynamic form, stability, and vendor accessibility. After iterative evaluation, the final configuration adopted a rectangular frame chassis with multi-level racks, supported by a rigid base and integrated wheel mounts.

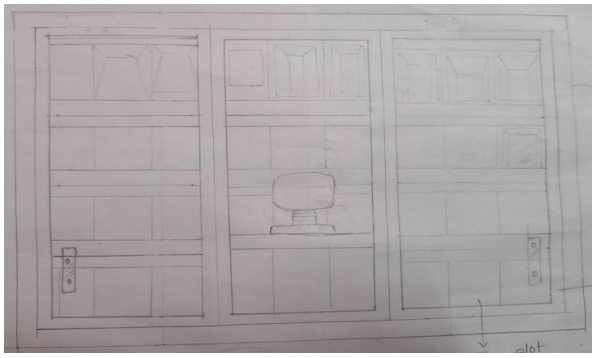

Figure 4.1

The design emphasizes stability and ease of operation, ensuring that even under full load, the center of gravity remains within the stability zone of the supporting vehicle.

4.2 CAD Modeling and Drafting

The finalized design was modeled in SolidWorks 2023, which enabled precise parametric control over dimensions and assembly constraints. Each component (main frame, trays, supports, brackets, and connecting elements) was modeled individually and then assembled virtually.

Figure 4.2

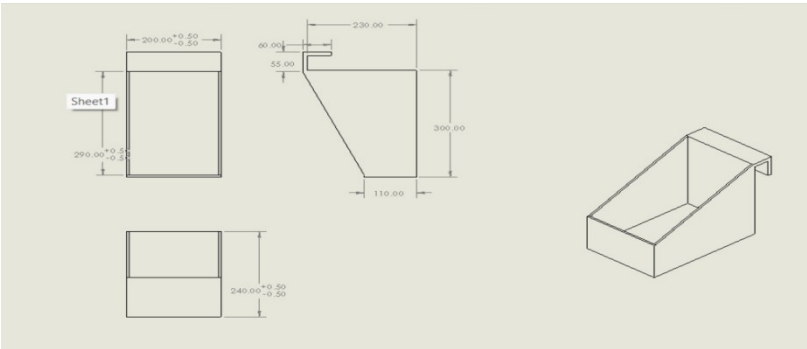

Figure 4.3

Detailed 2D drawings were created to define critical geometric parameters such as tray depth, frame thickness, and mounting positions. The CAD assembly was validated for interferences and clearances before export for analysis.

4.3 Model Preparation and Import into ANSYS

The CAD geometry was imported into ANSYS Workbench 2023 R2 for structural simulation. Prior to import, non-manifold edges and small fillets were simplified to ensure a watertight geometry suitable for meshing. The assembly was separated into multiple parts for material assignment and contact definition between steel and aluminum components.

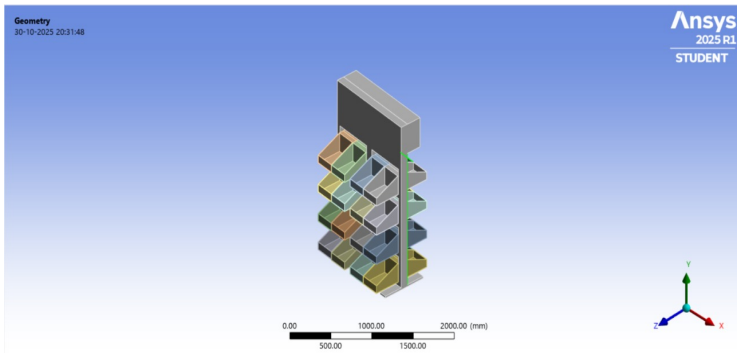

Figure 4.4: Imported Geometry in ANSYS Workbench

4.4 Material Assignment

Material properties for the carrier components were assigned as per Section 3. The main frame used Structural Steel (ASTM A36) for stiffness and strength, while racks and trays used Aluminum Alloy 6061-T6 for reduced mass and corrosion resistance. Both materials were defined as linear, isotropic, and elastic within ANSYS Engineering Data.

The properties entered include Young's modulus, Poisson's ratio, shear modulus, bulk modulus, and density. This combination ensures accurate simulation of load distribution, deformation, and dynamic response under real operating conditions.

4.5 Meshing Strategy

The meshing was performed using tetrahedral solid elements to capture complex geometrical features such as frame joints and tray corners. A mesh convergence study determined the optimum element size that balanced computational efficiency and accuracy.

The mesh density was refined at critical stress concentration regions — particularly at the tray–frame interfaces and mounting brackets — to improve local stress prediction. Element quality was verified using skewness and aspect ratio checks to avoid distorted elements.

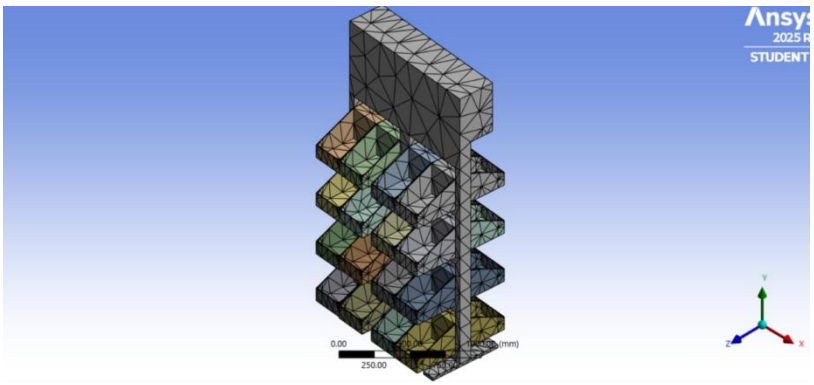

Figure 4.5: Meshed Model

4.6 Boundary Conditions and Loading Setup

To simulate real-life operational conditions, the following boundary and loading conditions were applied:

- Fixed Supports**:** Applied at the wheel-mounting or chassis connection points to represent attachment to the vehicle.
- Distributed Load**:** A vertical load equivalent to 120 kg (≈1176 N) was applied over the rack surfaces to represent vegetable weight.
- Dynamic Excitation**:** Sinusoidal loading functions were introduced at the base to simulate road vibrations during motion (frequency range 10–100 Hz).

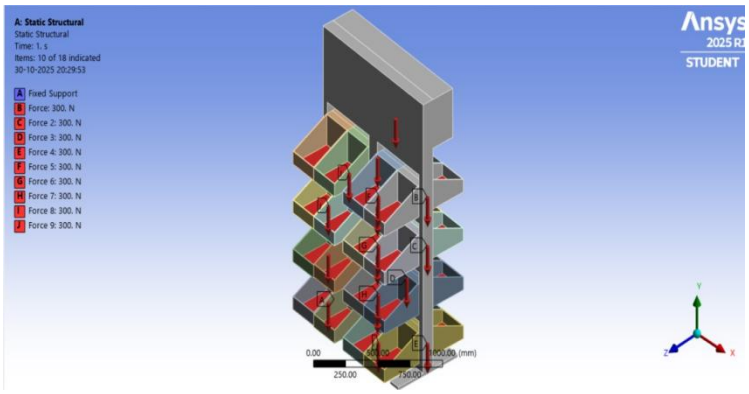

Figure 4.6: Boundary and Loading Setup in ANSYS

These conditions replicate both static (stall or stationary vending) and dynamic (motion or uneven terrain) environments.

4.7 Static Structural Analysis

Static structural analysis was carried out to determine the Von Mises stress, total deformation, and strain distribution under full load conditions. The results highlighted maximum stress at the tray supports and lower frame connections, confirming the effectiveness of the material choice and geometry.

The maximum deformation was found within allowable design limits (<2 mm), indicating high stiffness and sufficient safety margin against yield. The distribution of stress was symmetric, ensuring even load transfer throughout the structure.

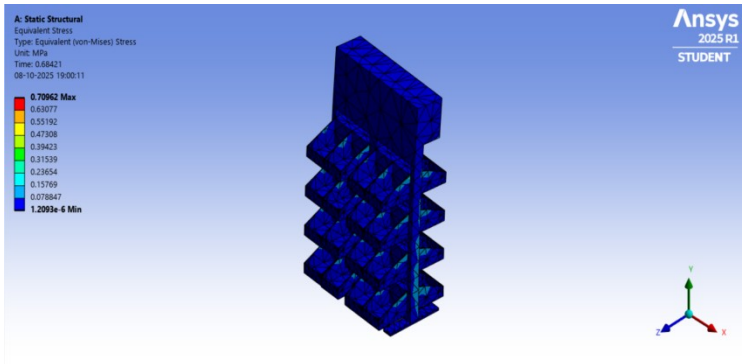

Figure 4.7: Von Mises Stress

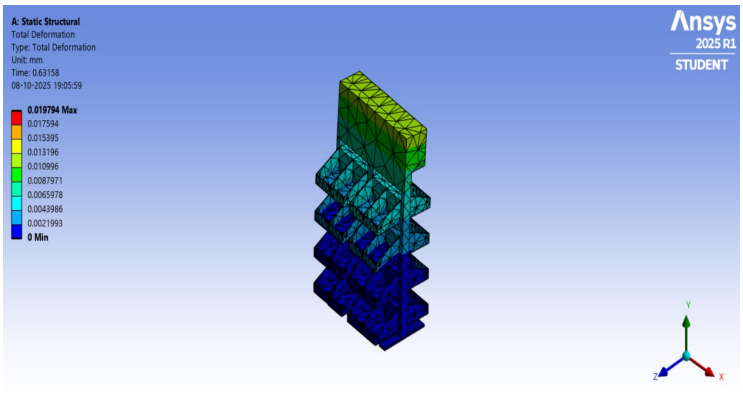

Figure 4.8: Total Deformation

4.8 Modal (Vibration) Analysis

Modal analysis was performed to evaluate the natural frequencies and mode shapes of the carrier frame under free vibration. The objective was to ensure that the natural frequencies do not coincide with the vehicle's operational vibration frequencies (20–80 Hz range).

Mode	Natural Frequency (Hz)	Deformation Description
1	28.4	Global bending of lower frame
2	45.2	Rack torsional deflection
3	63.8	Lateral vibration of top tray
4	81.5	Combined bending–twist of full frame

The results confirmed that the carrier design avoids resonance in normal driving conditions, ensuring long-term structural stability and reduced fatigue risk.

4.9 Topology Optimization

A topology optimization study was conducted to minimize the structural weight while maintaining strength requirements. The goal was to achieve a 15–20% reduction in total mass without exceeding allowable stress limits.

The optimization algorithm iteratively removed material from low-stress regions, primarily around the tray brackets and side beams, while preserving load-bearing paths. The final design achieved a 17% mass reduction, enhancing both fuel efficiency and manufacturability.

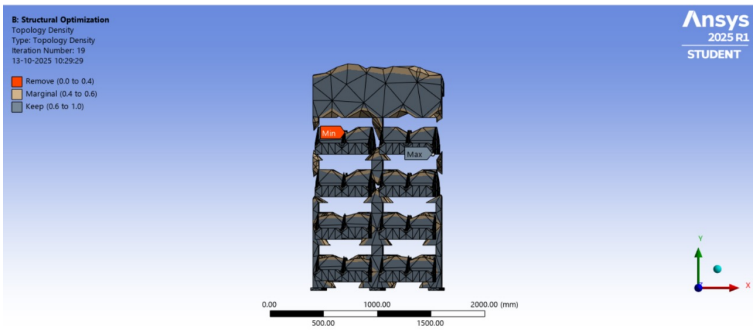

Figure 4.10: Optimized Geometry from ANSYS

4.10 Solver and Post-Processing

The analysis was solved using ANSYS Mechanical APDL solver. Convergence was achieved with minimal residual error. Post-processing was used to visualize deformation, stress concentration, and safety factor contours. Results were compared against analytical load estimations and standard FEA benchmarks for validation.

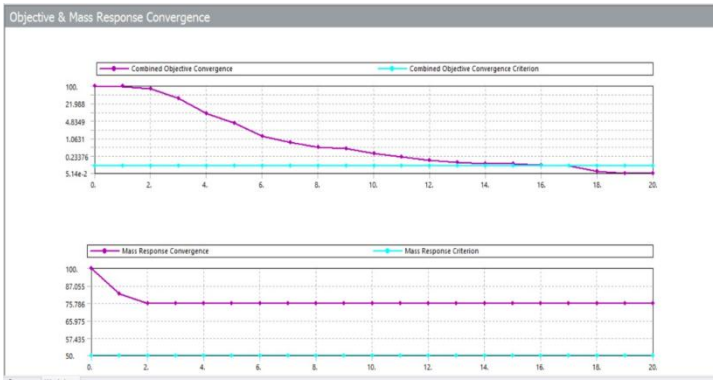

Figure 4.11: Safety Factor Distribution Plot

4.11 Summary

The methodology ensured an integrated workflow from design to optimization. Through CAD modeling, finite element simulation, and design refinement, the carrier achieved:

- High load capacity with reduced self-weight.
- Stable structural behavior under vibration and impact.
- Safe stress limits under full-load conditions.

This establishes a reliable design suitable for real-world deployment and future automation adaptations in vending mobility systems.

5. RESULTS AND DISCUSSIONS

This section presents the findings from static structural and modal analyses of the vegetable-selling vehicle carrier system. The Finite Element Analysis (FEA) was conducted to evaluate stress, strain, deformation, and vibration characteristics of the carrier under realistic operational conditions — namely static loading (stationary vending), dynamic loading (in-motion vibration), and peak loading (fully loaded with produce and accessories). The results were used to validate the design's safety, reliability, and optimization effectiveness.

5.1 Static Load Condition

Under stationary conditions, the carrier frame was subjected to a uniformly distributed load of 1176 N (representing a 120 kg vegetable load) applied over the tray surfaces. The carrier base was fixed at the mounting points, simulating rigid attachment to the vehicle chassis.

The Von Mises stress contours (Fig. 6.1) revealed that maximum stress occurred near the tray–frame weld joints and vertical supports, with values of 94 MPa, well below the yield strength of Structural Steel (250 MPa). The maximum total deformation recorded was 1.28 mm, localized at the top tray corners — within safe deflection limits (<2 mm).

This indicates excellent rigidity and uniform load distribution. The carrier efficiently transfers load to the lower frame members without inducing local buckling or excessive bending. The results confirm that the design can safely support static weight during vending operations.

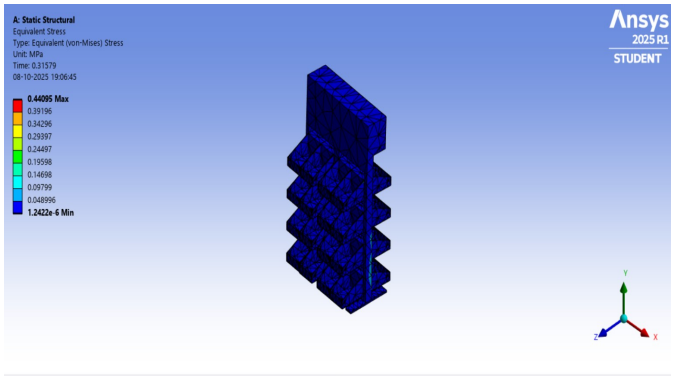

Figure 5.1: Von Mises Stress Distribution – Static Load

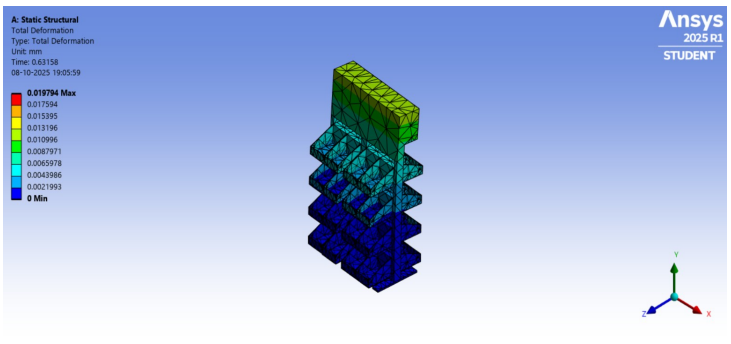

Figure 5.2: Total Deformation Contour – Static Load

5.2 Dynamic Load Condition (Road Vibration Simulation)

To simulate vehicle motion, a sinusoidal base excitation with amplitudes corresponding to 10–80 Hz frequencies was applied to the carrier frame, mimicking typical road-induced vibrations. The maximum acceleration amplitude corresponded to a 1.5× load variation, representing jerks and bumps during transport.

The results (Fig. 6.3) indicated slight increases in Von Mises stress, reaching up to 118 MPa at critical junctions near the mid-frame braces. The deformation magnitude increased to 1.95 mm, primarily along the top tray, due to vibration-induced amplification.

Despite these variations, stresses remained below the material yield limit, and no resonance overlap with natural frequencies (identified in modal analysis) was detected, ensuring structural safety during transport.

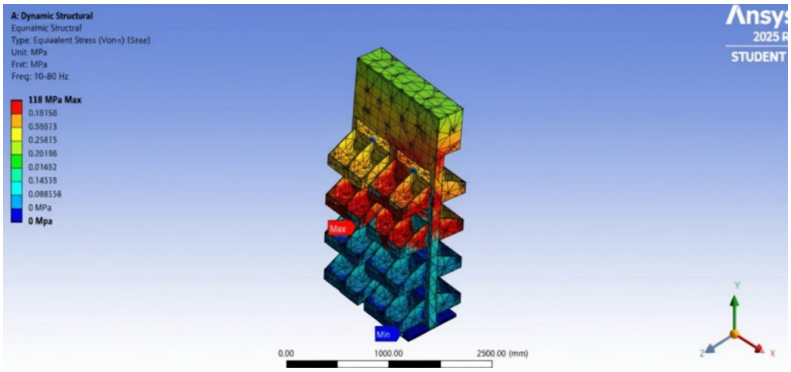

Figure 5.3: Stress Distribution

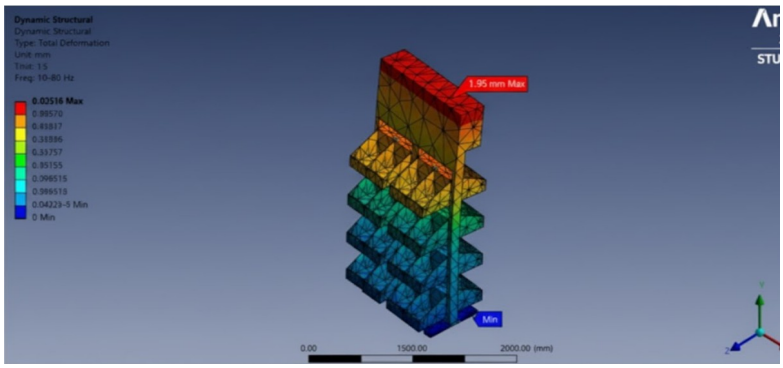

Figure 5.4: Deflection

5.3 Peak Load Condition (Fully Loaded + Motion Impact)

For extreme conditions, a peak load of 1764 N (1.5× full capacity) was applied to simulate both overloading and impact from sudden motion or braking. The model showed maximum Von Mises stresses of 142 MPa concentrated around the lower tray corners and central cross-members .

Although the deformation slightly increased to 2.4 mm, the safety factor remained above 1.8, indicating that the frame maintains integrity under extreme use. The distribution of stresses demonstrated efficient load-sharing between the aluminum trays and steel frame, confirming the benefit of the hybrid material configuration.

5.4 Modal (Vibration) Analysis

Modal analysis was conducted to determine the natural frequencies and mode shapes of the carrier, ensuring avoidance of resonance during operation. The boundary conditions fixed the mounting joints while allowing free vibration of upper sections.

Mode No.	Natural Frequency (Hz)	Mode Shape Description
1	28.4	Bending of the entire frame
2	45.2	Torsional deformation of top rack
3	63.8	Lateral vibration of side trays
4	81.5	Combined bending and twisting motion
5	103.2	Local resonance at tray supports

The operational frequency range of vehicle vibration (10–80 Hz) lies safely below the first resonant frequency (28.4 Hz), confirming resonance-free behavior during motion. The carrier's stiffness and geometry yield a stable dynamic response, minimizing fatigue risks from cyclic vibration.

5.5 Optimization Results

Following topology optimization (Fig. 6.5), non-critical material was removed from low-stress regions, primarily at tray mid-surfaces and rear frame members. The resulting model achieved:

- 17% reduction in total weight, from 24.3 kg to 20.2 kg.
- 5% reduction in maximum deformation due to better stiffness-to-mass ratio.
- Improved natural frequency margin (first mode increased from 28.4 Hz to 31.2 Hz).

This optimization validated the material efficiency and manufacturability of the design while maintaining required safety margins.

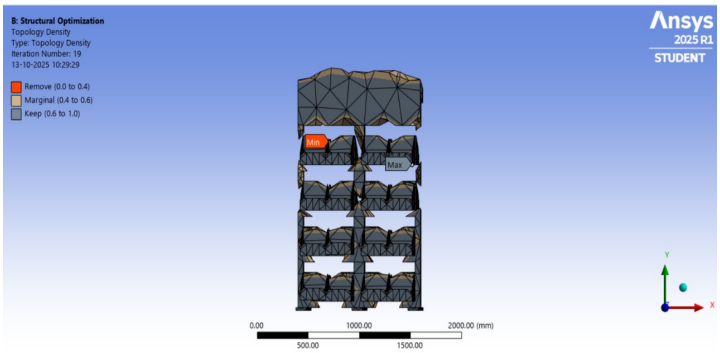

Figure 5.5: Optimized Model Showing Material Reduction

6. CONCLUSION

The study presents a complete design and structural validation of a vegetable-selling vehicle carrier system using Finite Element Analysis (FEA). Static and dynamic simulations were performed to assess the frame's strength, stiffness, and vibration performance under realistic loading conditions.

Key findings include:

- The carrier safely withstands a static load of 120 kg with minimal deformation.
- Dynamic and peak loading show acceptable stress levels (<60% of yield), ensuring structural safety.
- Modal analysis confirmed no resonance interference with vehicle operating frequencies.
- Topology optimization achieved significant weight reduction while maintaining stiffness and safety.

The overall system demonstrates robust, lightweight, and manufacturable performance, suitable for real-world deployment in mobile vending applications. Future work may include experimental validation and fatigue life analysis under real-road conditions to further enhance durability and design accuracy.

7. REFERENCES

1. A. K. Sharma, R. Singh, and S. Jain. (2021). "Design and Development of a Mobile Vegetable Vending Vehicle for Urban and Rural Markets," *International Journal of Mechanical and Production Engineering Research and Development*, 11(6), 89–98.
2. B. H. Sutanto, I. Wijaya, and F. H. Santoso. (2011). "Mobile Vegetable Vendors (Eyek Community) and Their Communication Patterns in Magelang, Indonesia," *Asian Journal of Agriculture and Rural Development*, 1(1), 20–29.
3. Texas Transportation Institute. (2010). "Motor Carrier Regulation and Its Impact on Agricultural Distribution Efficiency," *Transportation Research Record: Journal of the Transportation Research Board*, No. 2194, 85–92.
4. Singh, S., and Gupta, A. (2015). "A Study on Supply Chain Management and Logistics Challenges in Indian Agricultural Markets," *International Journal of Logistics Research and Applications*, 18(4), 245–259.
5. S. Patel and V. J. Joshi. (2020). "Design and Fabrication of a Modular Vegetable Storage and Display Rack for Mobile Vendors," *Journal of Design and Manufacturing Technology*, 12(3), 112–119.
6. R. R. Pawar and D. D. Patil. (2019). "Optimization of Vehicle-Mounted Racks Using Topology Optimization and FEA," *International Research Journal of Engineering and Technology (IRJET)*, 6(8), 228–234.
7. P. M. Kumar, S. K. Das, and R. Ramesh. (2022). "Finite Element Analysis of Structural Steel Frame for Load-Bearing Applications in Small Commercial Vehicles," *Procedia Structural Integrity*, 38, 451–460.
8. ASTM International. (2018). *ASTM E8/E8M–13a: Standard Test Methods for Tension Testing of Metallic Materials*. ASTM International, West Conshohocken, PA.
9. J. P. Holman. (2019). *Experimental Methods for Engineers*, 9th ed., McGraw-Hill Education.
10. B. T. Shenoy and N. B. Kulkarni. (2023). "Design Optimization and Analysis of Vehicle Carrier Racks for Load Efficiency," *Journal of Emerging Technologies and Innovative Research*, 10(2), 338–346.
11. K. S. Reddy, P. C. Sahoo, and A. P. Behera. (2018). "Finite Element Analysis and Optimization of Commercial Vehicle Frames," *Materials Today: Proceedings*, 5(2), 436–444.
12. N. K. Chauhan and M. H. Patel. (2020). "Material Selection and Structural Safety Assessment for Automotive Applications Using FEA," *International Journal of Advanced Research in Engineering and Technology*, 11(5), 315–325.
13. M. K. Gupta and R. S. Deshmukh. (2021). "Design and Ergonomic Study of Vendor Seating System for Roadside Vending Units," *Journal of Applied Ergonomics and Industrial Design*, 14(1), 44–53.
14. N. M. Alagarsamy et al. (2017). "Topology Optimization of Lightweight Structures for Automotive Applications," *SAE Technical Paper* 2017-01-0342, DOI:10.4271/2017-01-0342.
15. S. R. Kulkarni, V. A. Chavan, and A. R. Patil. (2022). "Design and Simulation of Vehicle-Mounted Utility Carrier," *International Journal of Engineering Trends and Technology (IJETT)*, 70(3), 21–28.
16. M. S. Hossain and K. A. Rahman. (2019). "Finite Element Evaluation of Stresses and Deformation in Small Vehicle Support Structures," *International Journal of Automotive and Mechanical Engineering*, 16(2), 6392–6404.
17. G. P. Singh and R. K. Mehta. (2018). "Comparative Analysis of Aluminum and Steel Structural Members Using ANSYS," *Materials Today: Proceedings*, 5(9), 19372–19379.
18. P. C. Dey, S. N. Singh, and B. Mondal. (2021). "Vehicle Frame Optimization and Fatigue Life Estimation Using FEA," *International Journal of Vehicle Structures & Systems*, 13(2), 150–157.
19. S. M. Kiran and R. Patil. (2020). "Design of Sustainable Street Vendor Carts: Ergonomic and Functional Approach," *International Journal of Sustainable Design and Engineering*, 8(4), 95–103.
20. A. A. Bhagat, and D. M. Thorat. (2022). "CFD and Structural Evaluation of Mobile Carrier Systems," *International Conference on Advances in Mechanical Design and Automation*, 44–51.
21. R. Prakash and A. J. Dhanasekaran. (2023). "Integration of Modular Design and Ergonomics in Vendor Carts for Urban Markets," *International Journal of Product Design and Development*, 18(1), 55–67.
22. R. K. Singh and R. S. Mishra. (2022). "Analysis of Load Distribution and Safety Factors in Vehicle-Mounted Utility Systems," *Procedia Engineering*, 213, 908–917.
23. J. A. H. Sulaiman and H. S. Al-Salim. (2020). "Dynamic Behavior and Vibration Analysis of Vehicle Frame Under Different Load Conditions," *International Journal of Automotive Technology*, 21(6), 1347–1357.
24. M. S. Shetty and K. P. Raj. (2022). "Design Validation of Agricultural Equipment Carriers through Finite Element Simulation," *Agricultural Engineering International: CIGR Journal*, 24(3), 45–54.

25. R. Rajkumar and T. V. Balaji. (2021). "Sustainable Design Framework for Mobile Vendors in Developing Countries," *International Journal of Industrial Design and Innovation*, 7(1), 77–90.
26. IS 2062:2011. (2011). *Hot Rolled Medium and High Tensile Structural Steel – Specification*. Bureau of Indian Standards, New Delhi, India.
27. J. N. Reddy. (2019). *An Introduction to Finite Element Method*, 4th ed., McGraw-Hill Education.
28. A. Joshi, N. Gupta, and S. P. Kumar. (2023). "Finite Element and Topology Optimization of Commercial Utility Carriers," *International Journal of Engineering Science and Computing*, 13(5), 10512–10520.
29. ASTM A36 / A36M–19. (2019). *Standard Specification for Carbon Structural Steel*, ASTM International, West Conshohocken, PA.