KLE Technological University
Creating Value
Leveraging Knowledge

KLE Technological University, Hubballi -580031

Experience Engineering @
School of Mechanical EngineeringKLETECH
Engage | Explore | Excel | Evolve

A Minor project report on

Onion Detopping Machine

Related to the course: - Minor Project (24EMEW301)

Submitted By

Sl. No.	Name	Roll No	USN
1.	Abhinav Hegde	203	01FE22BME006
2.	Kirangoud Biradar	230	01FE22BME065
3.	Varun Teli	233	01FE22BME118
4.	Darshan L	234	01FE23BME461
5.	Sameer Chitnis	237	01FE22BME115
6.	Akshay Kulkarni	245	01FE23BME476

Under the Guidance of

Prof. Sridhar M

2024-25

CERTIFICATE

This is to certify that Minor Project entitled **"Onion Detopping Machine"** submitted by 6th semester **Division B Team 08 to** the **KLE Technological University**, Hubli-580031, towards partial fulfillment for the award of the degree of Bachelor of Engineering is a bona-fide record of work carried out by them under our supervision. The contents of the project report, in full or in parts, have not been submitted to any other institute or university for the award of any degree or diploma.

Prof. Sridhar M	Dr. G. U Raju
Guide	**Head of department**

Name of the Examiners	**Signature with date**
1.	
2.	

ACKNOWLEDGEMENT

The successful completion of any task would be incomplete without mentioning the people who made it possible and whose guidance and encouragement have made our efforts successful.

At the outset, we would like to express our deep sense of gratitude to our guide, **Prof. Sridhar M,** for making this project report successful through their invaluable guidance at every stage of the project report.

We also thank HOD **Dr. G U Raju** for his encouragement in undertaking the task of this project.

We express our sincere regard and gratitude to our project coordinators, **Prof Sridhar M, Prof. Praveen P, and Prof Ashwin,** School of Mechanical Engineering, KLE Tech, Hubli

We are also thankful to all faculty members of the Mechanical Engineering Department of KLE Technological University, for helping us directly or indirectly in different stages of our project work.

Contents:

1. Refined problem statement		**Page No.**
1.1	Identifying end users (Customers)	5-7
1.2	Requirements List	8

2. Product benchmarking		
2.1	Studying and exploring competitive products	8
2.2	Research papers	9
3. Design Specifications		
3.1	Objectives	10
3.2	Constraints	10
3.3	Objective tree (affinity diagram)	11
4. Concept generation		
4.1	Defining Functions	12
4.2	Morphological chart	12
4.3	Generating design alternatives	13-15
4.4	Selecting the best alternatives (Pugh chart)	16
5. Design		
5.1	3D Model	17-22
5.2	Assembly models	23
5.3	2D drawing	17-22
5.4	Design Calculations and Analysis	23-25
6 Prototype Planning		
6.1	Raw materials	26
6.2	Bill of Materials	26-27
6.3	Joining techniques/ methods	27
6.4	Flow Chart	27
6.5	Circuit Block Diagram	28
7 Prototyping		
7.1	Fabrication Pictures	28-29
7.2	Photos	29-30
7.3	Conclusion	30

Phase 1

1.1 Refined problem statement

Customer: Chandarshekhar Interviewer(s): Sameer C Date: 10-03-2025

Question/Prompt	Customer Statement	Interpreted Need/ Expectations
Typical uses	Used post-harvest to remove tops from onions before packing.	Machine should save time and labor in post-harvest processing.
Likes the current methods followed (traditional techniques)	Manual cutting gives cleaner cuts and avoids damage to onion.	Precision in cutting needs to be retained in the new design.
Dislikes the current methods followed (traditional techniques)	It is too time-consuming and labor-intensive.	The machine should be faster and reduce physical effort.
Suggested Improvements	Semi-automatic solution with consistent cut length.	Easy to operate and provides uniform output.

Customer: Hussain Interviewer(s): Akshay K Date: 12-03-2025

Question/Prompt	Customer Statement	Interpreted Need/ Expectations
Typical uses	Mainly used during peak harvest season in bulk quantities.	The machine must handle large volumes efficiently.

Likes the current methods followed (traditional techniques)	No dependency on electricity; works in remote areas.	Prefer a solution that works manually or with low power.
Dislikes the current methods followed (traditional techniques)	Manual cutting slows down the supply chain.	Speed and productivity improvement required.
Suggested Improvements	A pedal-based or battery-operated model.	Flexible power options; suitable for field use.

Customer: Hegde Printing Interviewer(s): Kirangoud Date: 08-03-2025

Question/Prompt	Customer Statement	Interpreted Need/ Expectations
Typical uses	For both domestic and export market preparation.	The finish quality must match export standards.
Likes the current methods followed (traditional techniques)	High accuracy in detopping by experienced workers.	Maintain high quality of detopping with minimal damage.
Dislikes the current methods followed (traditional techniques)	Output depends on labor skill and availability.	Reduce dependency on skilled labor.
Suggested Improvements	Adjustable blade height based on onion size.	Should handle different sizes without loss in quality.

Customer: Kartik	Interviewer(s): Abhinav H	Date: 12-03-2025
Question/Prompt	**Customer Statement**	**Interpreted Need/ Expectations**
Typical uses	Pre-processing before sorting and grading.	Machine should integrate easily with grading process.
Likes the current methods followed (traditional techniques)	Allows visual inspection of each onion during cutting.	Add inspection possibility or ensure clean output.
Dislikes the current methods followed (traditional techniques)	Too much waste and inconsistent cuts.	Reduce wastage, improve consistency.
Suggested Improvements	Transparent chute or tray for quick checking.	Ergonomic design and minimal handling required.

1.2 Requirements List: -

Customer	Requirements
1 to 6	A Semi-automatic or automatic operated efficient onion detopping machine
	Ability to sort onions based on onion size
	It would be sturdy enough for long term use in commercial
	Easy for maintenance
	It would be sturdy enough for long term use in commercial
	Smooth manual operations
	Low cost, durable and easy to use

Phase 2

Product Benchmarking

2.1 Studying and exploring competitive products

Products (Images or name)	Specifications	Cost	Advantage	Limitations	Functions
	- Detops onions by cutting top ends - Manual feed with semi-automatic cutting - Stainless steel blades - Motor-driven cutting unit	Approx. ₹35,000 – ₹50,000	- Fast and consistent detopping - Low maintenance - Simple to operate	- Manual feeding needed - Limited to one onion size per setting	- Cuts onion tops - Prepares onions for peeling and further processing

	- Fully automatic detopping system - Conveyor-based feed - Adjustable blade for multiple sizes - PLC-based control panel	Approx. ₹1,20,000 – ₹1,50,000	- High efficiency and throughput - Supports varying onion sizes - Reduces labor cost	- Higher cost - Needs trained operator for PLC controls	- Cuts onion tops and tails - Auto-feeds and aligns onions - Prepares for next processing stage

2.2 Research papers

Paper Name/Authors	Information
Rathinakumari A.C. and Senthil Kumaran G. ICAR-Indian Institute of Horticultural Research, Bengaluru – 560 089, Karnataka. India Corresponding author E-mail : CAROLINA.KUMARI@icar.gov.in	**Onion is the one of the important vegetable crops cultivated in India. Multiplier type onion is one among the three major types of onions. Tamil Nadu accounts for five per cent of country's area under onion and more than 70 per cent of the area is cultivated by small onion (*Allium cepa* var. *aggregatum*). Around 90 per cent of country's multiplier onion is produced from Tamil Nadu. Detopping is one of the steps in the on-farm processing carried out after harvest. Presently this is done manually by farm women. Individual onions are picked and detopping is done by using sickle. This operation is time consuming and highly drudgery in nature. An Onion detopping machine to remove the foliage after harvest was designed and developed in the present study. This machine has a capacity of 370 kg/h against 30 kg/h manual practice and works with an efficiency of 98%. The unique design of the detopper is that it is suitable for all sizes of onions. Also, the cluster is intact after detopping, which is very important requirement.**
Lokesh Kumawat[1]& Hifjur Raheman[1] Laboratory Investigations on Cutting Torque and Efficiency for Topping of Onion Leaves Using Wire-Type Rotary Unit	Methods A laboratory setup comprising a rotary cutting unit with wire as working element was developed to measure the torque required to cut onion leaves along with topping efficiency. The developed set up simulated the topping process of an onion topper in actual field condition which helped to analyze the effect of different operational parameters (rotational speeds of cutting unit, cutting width, and forward speed of the machine) on cutting torque and topping efficiency. Experimental data obtained from this setup revealed that the rotary speed of the cutting unit and forward speed of the harvester should be below 1800 rpm and 1.2 km h^{-1}, respectively; otherwise, it may damage the onion leaves with poor topping efficiency. Mature onion crop (Pusa Red) at 110 days after transplanting were chosen as experimental samples. The range of cutting speed, cutting width, and forward speed were 1200–1800 rpm, 300–600 mm, and 0.22–0.33 m s^{-1}, respectively.

Phase 3

3.1 Design Specifications

Objectives	
Easy to operate	User-friendly design
Efficient leaf cutting	Low power consumption
Safe to use	Easy to clean and maintain
Cost-effective	Easy loading and unloading of onions
Durable and long-lasting	Compact size

3.2 Constraints

Constraints
Soil Conditions: Performance may vary with different soil types, which can affect digging, efficiency and traction.
Onion Size and Variety: The machine must handle different onion sizes and shapes without damaging them, which can be challenging for a fixed design.
Cost Limitation: The machine must be affordable for target users, limiting high-end components or automation.
Power Source: Dependence on available power sources (manual, electric, or tractor-PTO driven) could limit functionality in remote or off-grid areas.
Field Layout: Irregular field layouts, narrow rows, or small plot sizes may restrict machine efficiency.

3.3 Objective tree (affinity diagram)

O#	Objectives	First-level objectives	Second-level objectives	Third-level objectives
1	Reduce man power		★	
2	cost reduction.		★	
3	Improve the design of the setup			★
4	Operate at high speed		★	
5	Minimize power consumption	★		
6	Making it Eco-Friendly	★		
7	Making it User Friendly.		★	
8	Suitable for small and medium sized farms	★		
9	Easy to operate		★	
10	Safety	★		
11	Efficient control of each function.		★	

Phase 4

4.1 Functions: -

Si.	Functions	Sub Functions (optional)
1	Cut onion leaves efficiently using a rotary blade	—
2	Hold onion securely during cutting.	—
3	Rotate blade via electric motor.	—
4	Sort onions based on size.	—
5	Start/stop machine using control panel	—
6	Easy to clean, portable, and simple to operate.	—
7	Blade guard and stable base for safety.	—
8	Emergency switch for instant shutdown.	—

4.2: - Morphological Chart

Functions ▼	Means ▶	Means 1	Means 2	Means 3	Means 4
Machine Type		Manual	Semi Automatic	Fully Automatic	Fully Automated with Robots
Cutting Mechanism		Rotating blade	Circular cutter	Pneumatic	Laser Cutter
Feeding System		Manual Feed	Conveyor Belt	Vibrating Table	Automatic Hopper Feed
Detopping Mechanism		Single Cut	Multiple Parallel Cuts	Rotating Blades	Horizontal and Vertical Cut Combo
Waste Disposal		Manual Collection	Conveyor Belt to Waste Bin	Pneumatic Waste Removal	Automatic Waste Compaction
Machine Material		Stainless Steel	Mild Steel	Plastic and Steel Hybrid	All Stainless Steel

Power Source	Electric Motor	Gas Engine	Electric Motor with Battery backup	Solar and Electric
Size of Onions	Fixed Size	Adjustable to Onion Size	Variable size detection	Automatic Size Detction

4.3 Concept Generation

Design No.01

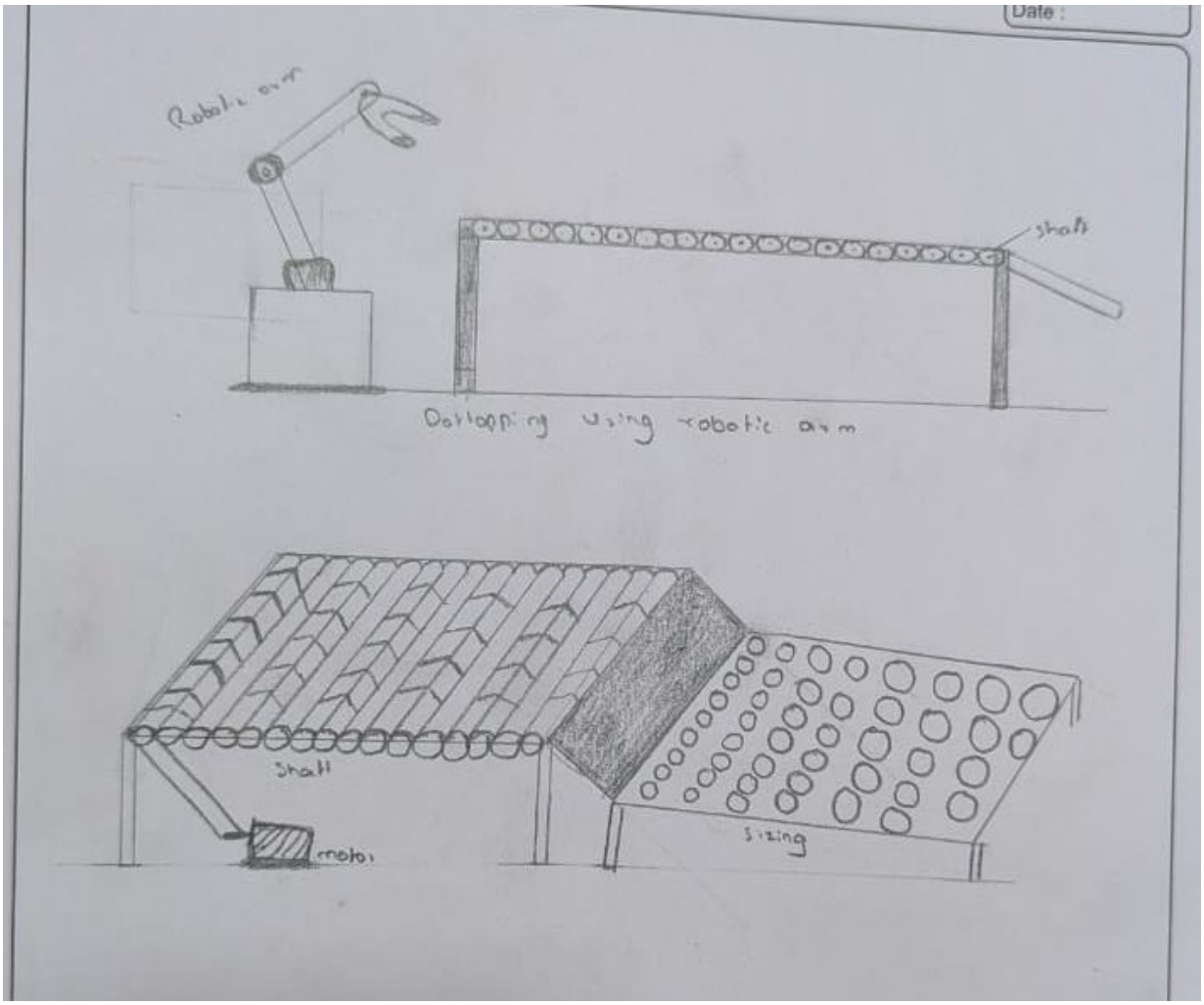

Design No: - 2

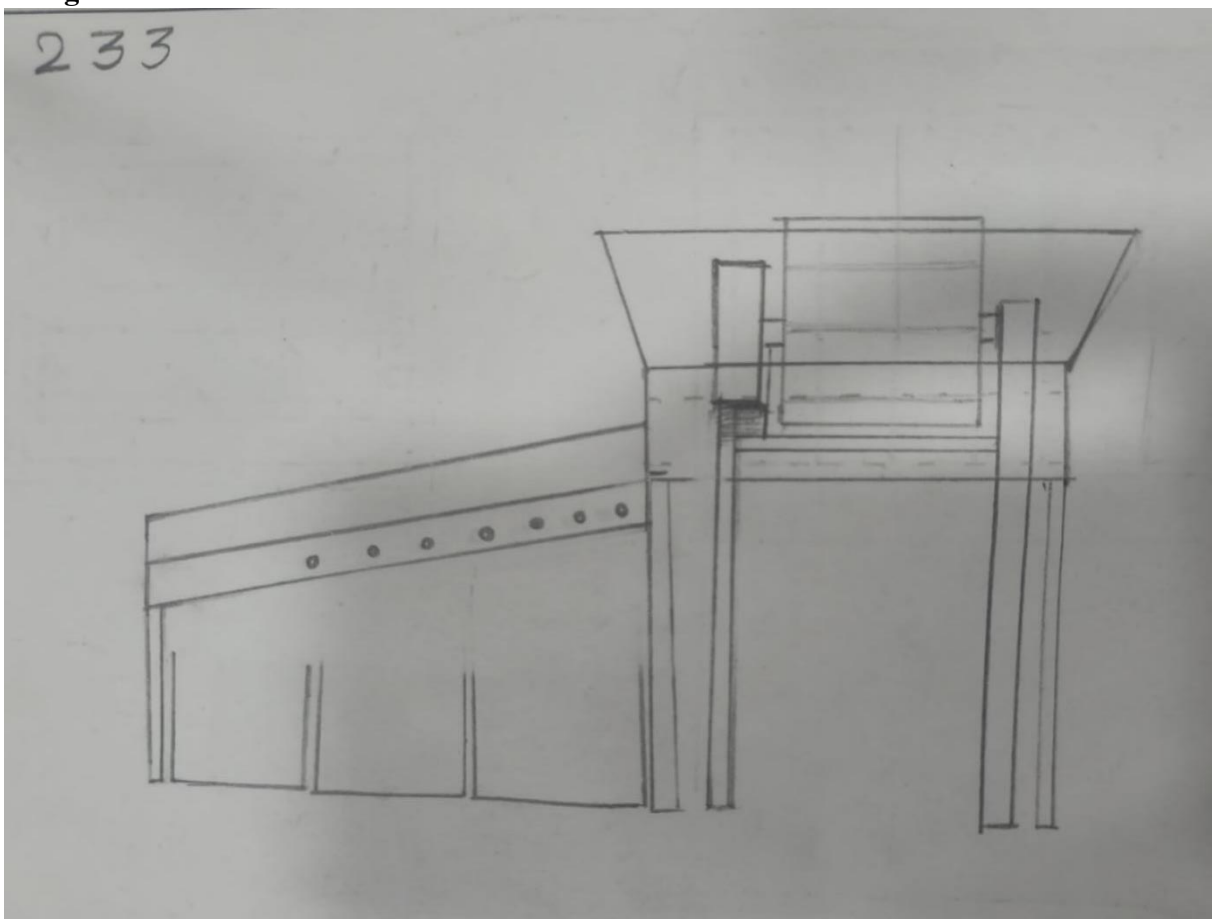

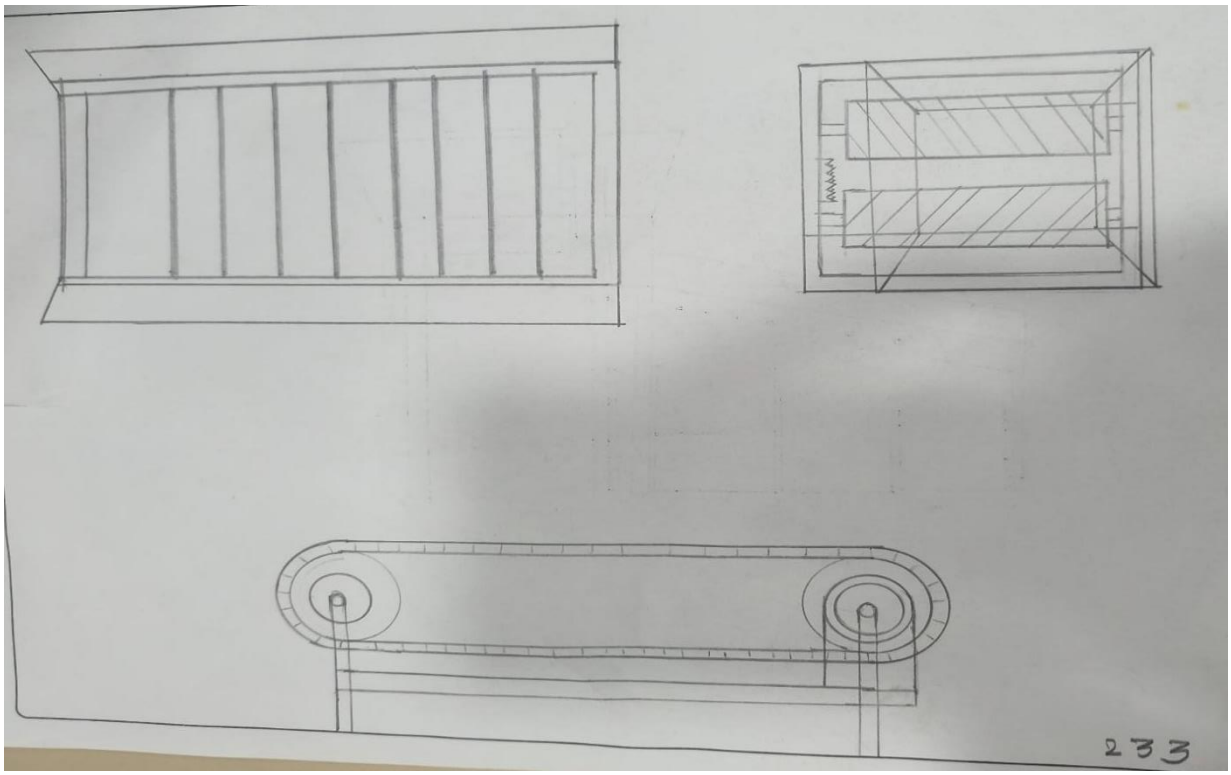

Design No: -3

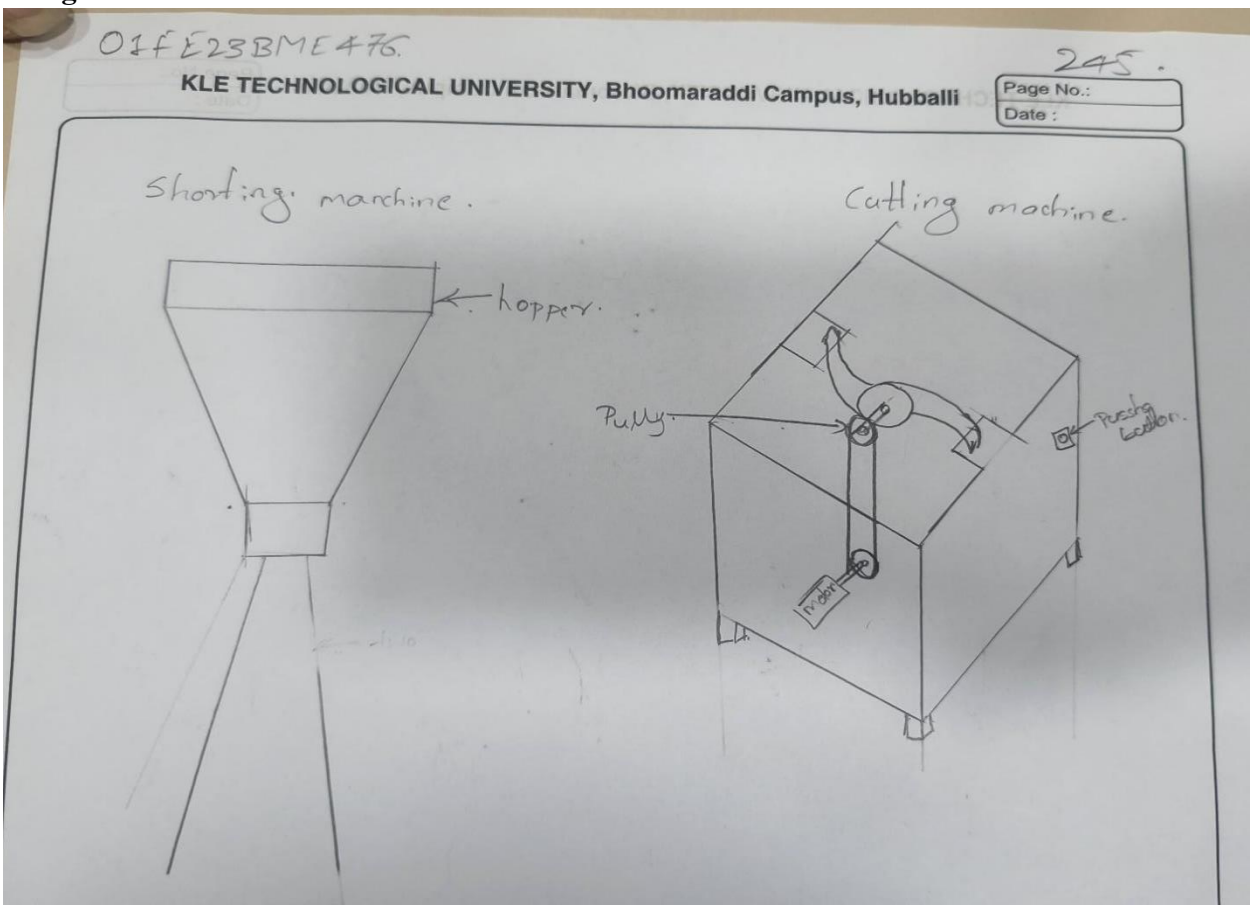

Design No: - 04

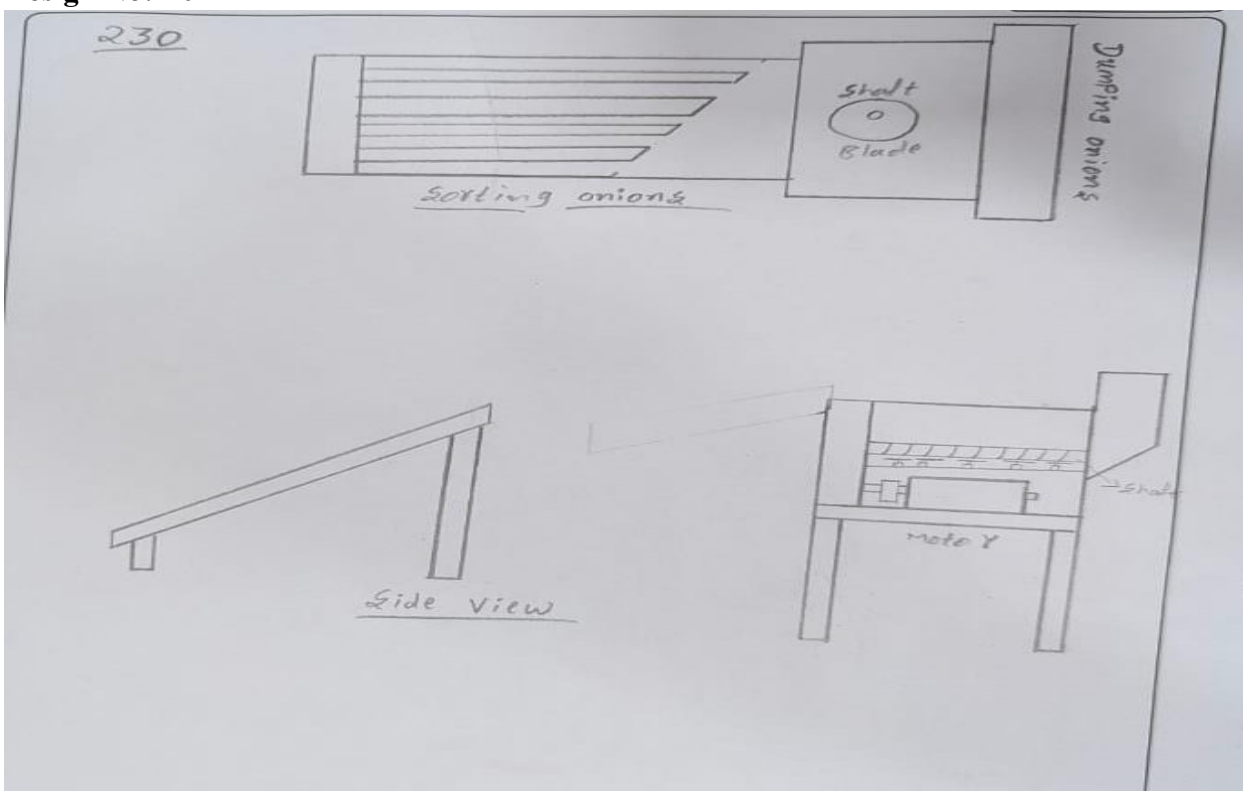

Design No 5:-

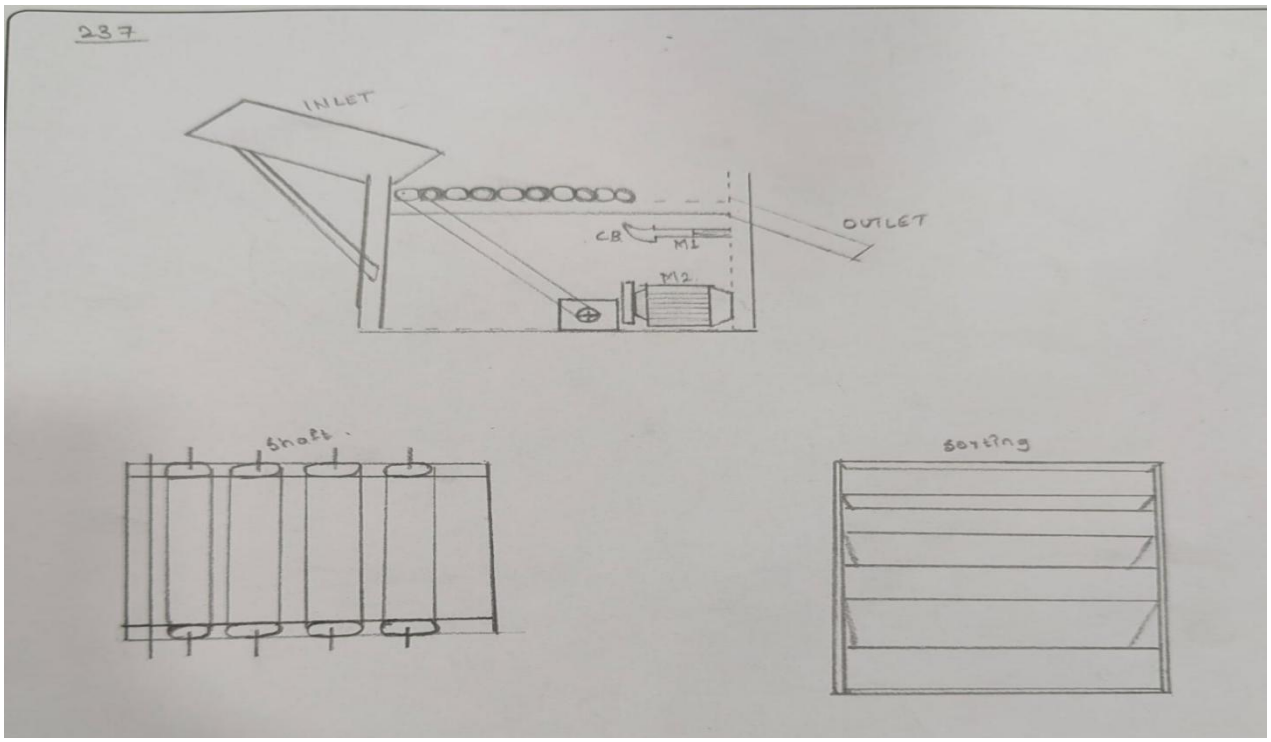

4.4 Selecting Design Alternative (Using Pugh Chart)

Requirements	Weight	Design1	Design2	Design3	Design4	Design5	Reference
Cutting Efficiency		6	8	5	5	5	
Easy of Maintainance		5	9	8	6	7	
Safety		7	10	5	8	6	
Accuracy of Cut		8	9	8	7	7	
Energy Efficiency		3	8	7	6	5	
Durability		7	10	7	8	8	
Feeding system		8	9	4	7	6	
Waste od management		7	10	6	6	8	
Sorting of onions		8	10	8	8	7	
Pluses		4	5	3	3	4	
Sames		2	1	2	1	3	
Minuses		3	3	4	4	2	
Overall Total		1	2	-1	-1	2	
Weighted Total		59	83	55	69	59	
Yes / No		No	Yes	No	No	No	

5.1 Design Model: -

Rotating Shaft: -

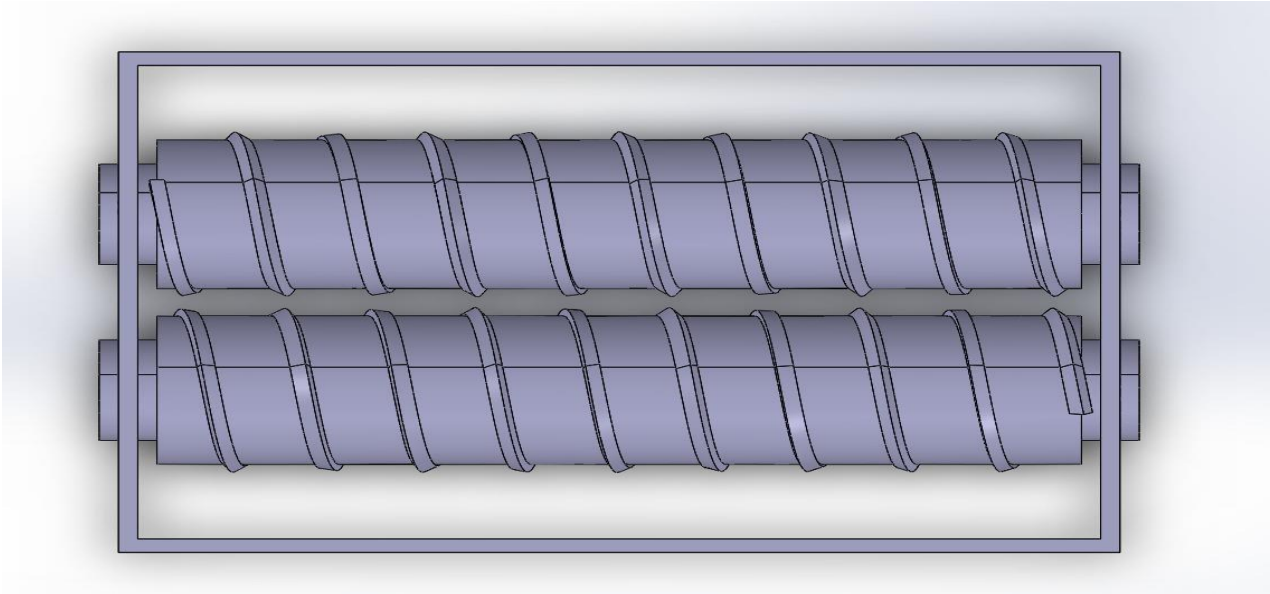

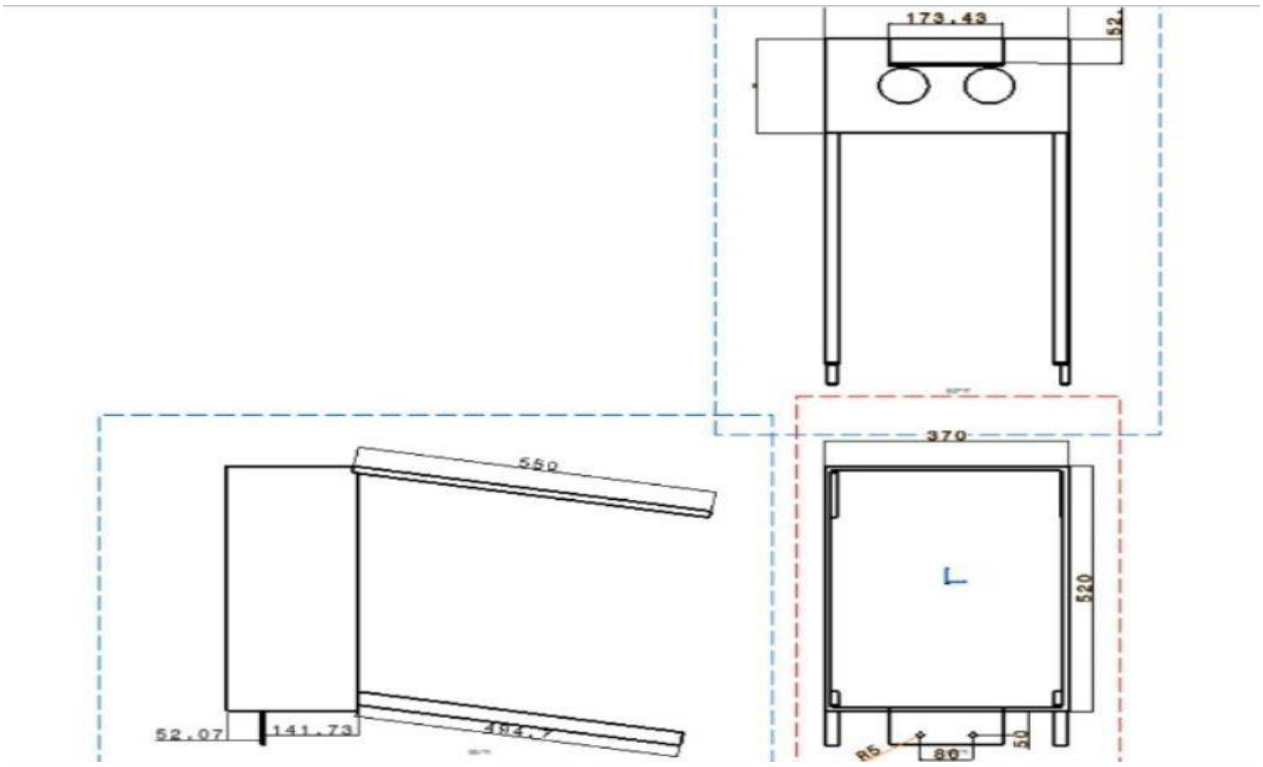

Sorting:

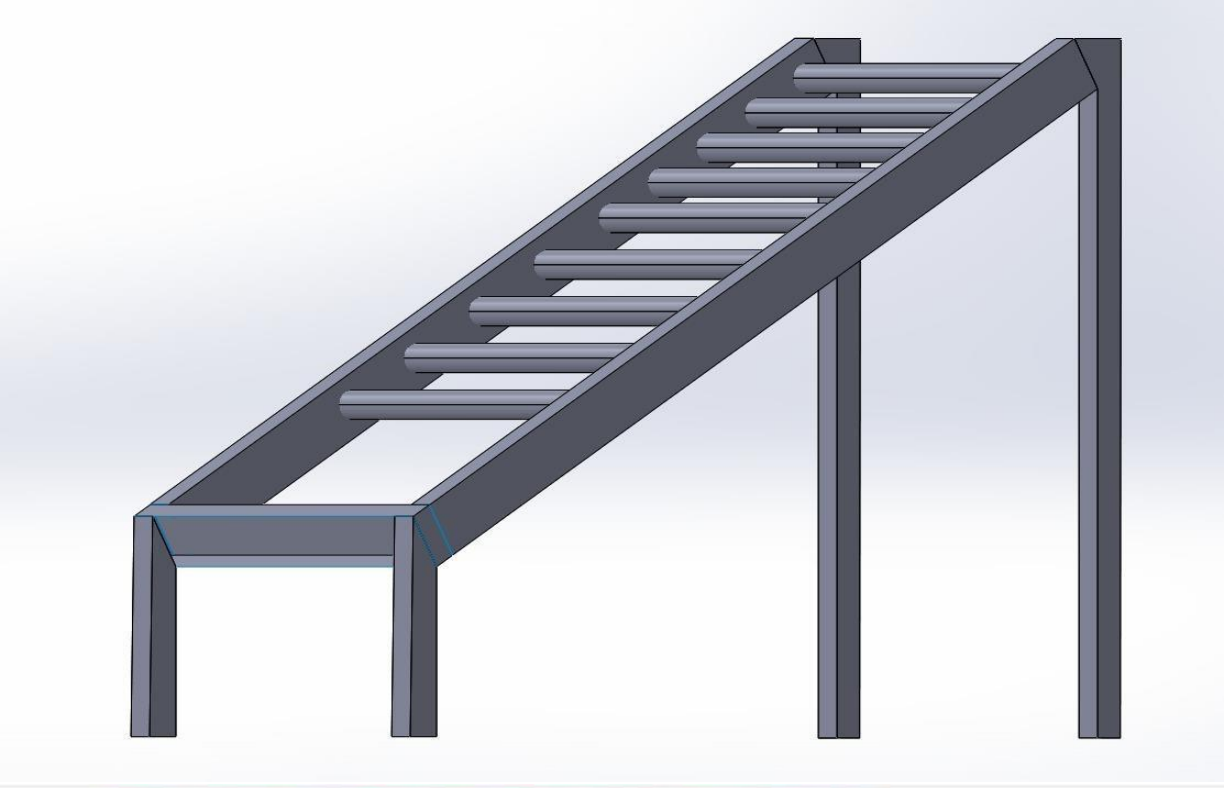

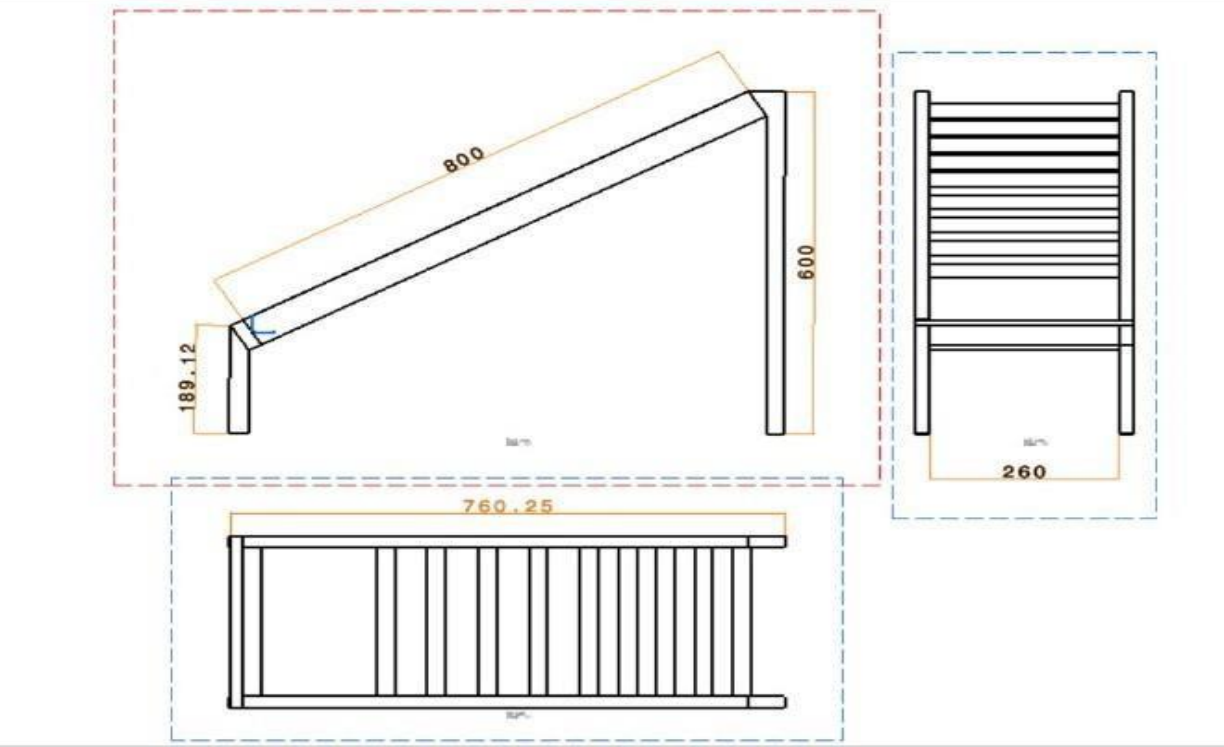

-

Conveyor:

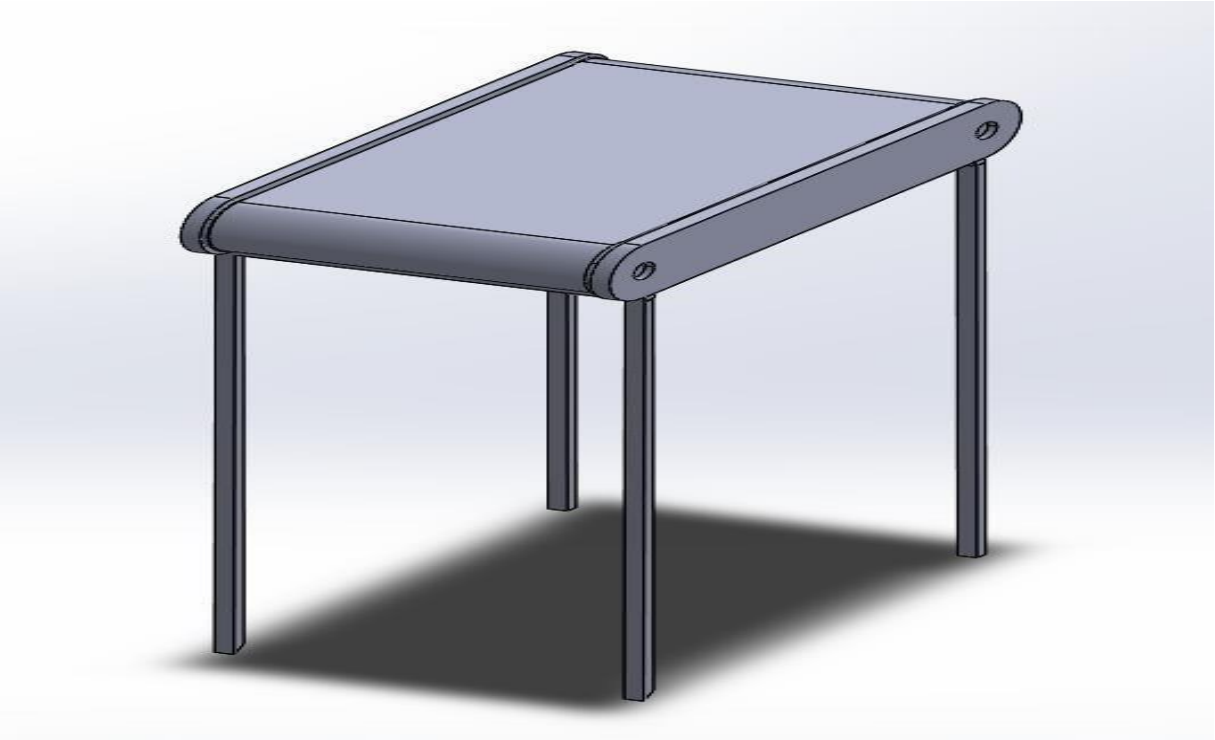

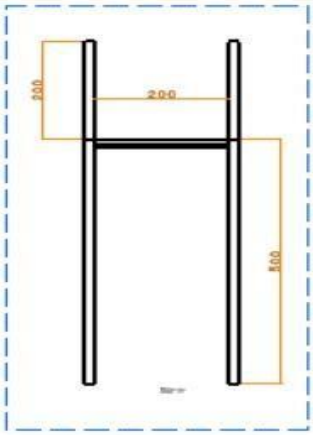

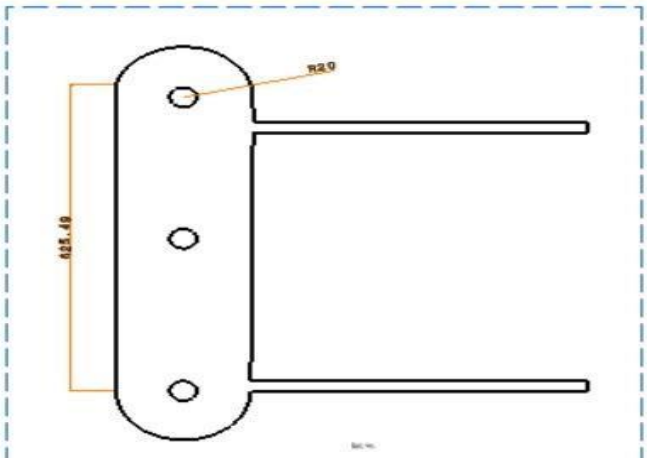

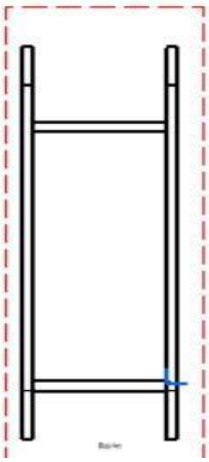

5.2 Assembly Design

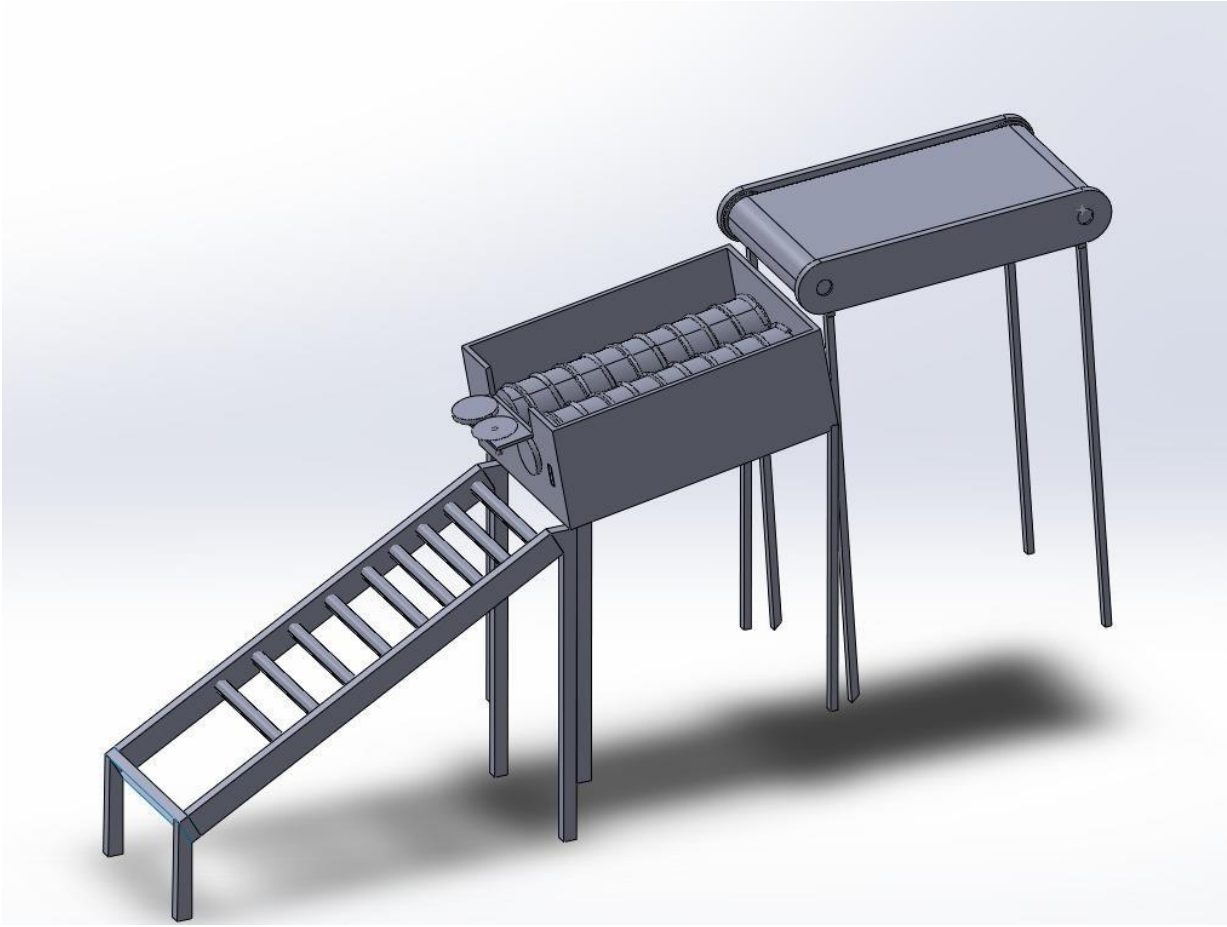

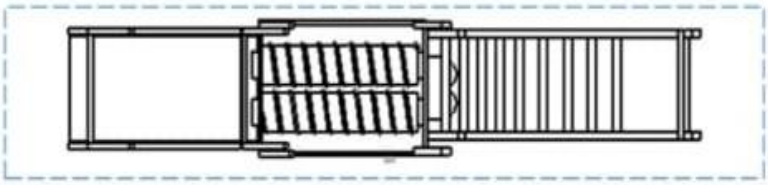

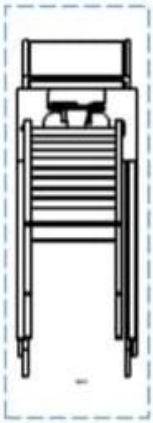

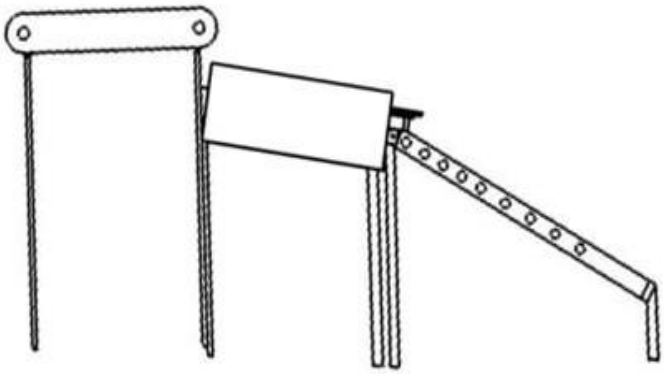

Component	Specification
	1. A 60 RPM DC motor is a low-speed, high-torque motor commonly used in automation and hobby projects. 2. It operates on Direct Current (DC), typically within 6V to 12V voltage range depending on design. 3. It delivers 60 revolutions per minute, making it ideal for applications requiring precise, slow motion. 4. These motors often come with a gearbox to reduce speed and increase torque.
	1. A 300 RPM DC motor is a medium-speed motor suitable for tasks requiring balanced speed and torque. 2. It typically operates on a voltage range of 6V to 12V, depending on the model. 3. It runs at 300 revolutions per minute*under no-load conditions. 4. A built-in gearbox is often used to achieve the desired RPM while increasing torque.
	1. A 980 RPM DC motor is a high-speed motor commonly used where fast rotational motion is required. 2. It typically operates at 12V, though some variants may support 6V–24V depending on design. 3. Produces 980 revolutions per minute under no-load conditions. 4. It generally has low torque output, making it suitable for lightweight or high-speed applications.

	1.Power Rating: Delivers a total output power of 60 watts. **2.Output Voltage**: Common outputs include 12V, 15V, or 20V, depending on the device requirements. **3.Output Current**: Current varies with voltage—for example, 5A at 12V or 3A at 20V. **4.Input Voltage**: Typically supports 100V to 240V AC input, making it suitable for global use.
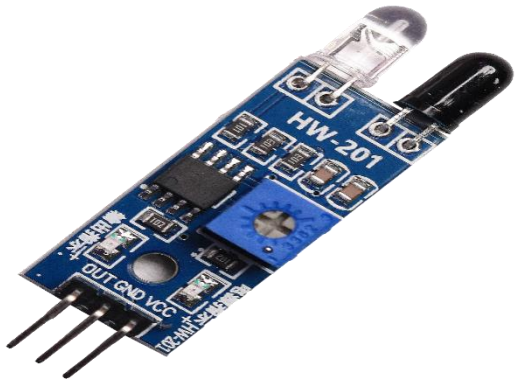	**Detection basis**: Infrared sensors detect IR radiation—either emitted (passive) or reflected (active) **Advantages**: non-contact, fast response, low power, compact, and cost-effective. **Common uses**: in motion sensors, proximity sensors, remote controls, and non-contact thermometers.
	Purpose: Audio signaling device converting electrical signals into sound for alarms, timers, user feedback, etc. **Types**: Mainly **electromagnetic/magnetic** (coil + magnet) and **piezoelectric** (uses vibrating ceramic). **Benefits**: Compact, low power, easy to integrate, reliable, and cost-effective for simple alert tones.
	Wi-Fi + microcontroller in one: Built-in 802.11 b/g/n Wi-Fi + Tensilica 32-bit CPU (80–160 MHz) for standalone IoT tasks **Low-power modes**: Sleep, light-sleep, and deep-sleep (µA range) for battery-operated designs. **Rich I/O and protocols**: Multiple GPIO pins, ADC, UART, SPI, I²C, PWM + TCP/IP, HTTP, MQTT support

	Detection types: Smoke sensors use **ionization** (detects small particles from fast flames) or **photoelectric** (detects larger particles from moldering fires) **Ionization pros/cons**: Fast response to flaming fires, but more sensitive to things like cooking smoke . **Photoelectric pros/cons**: Better for slow, smoky fires and fewer false alarms (like from steam/toast)

5.4 FEM Analysis

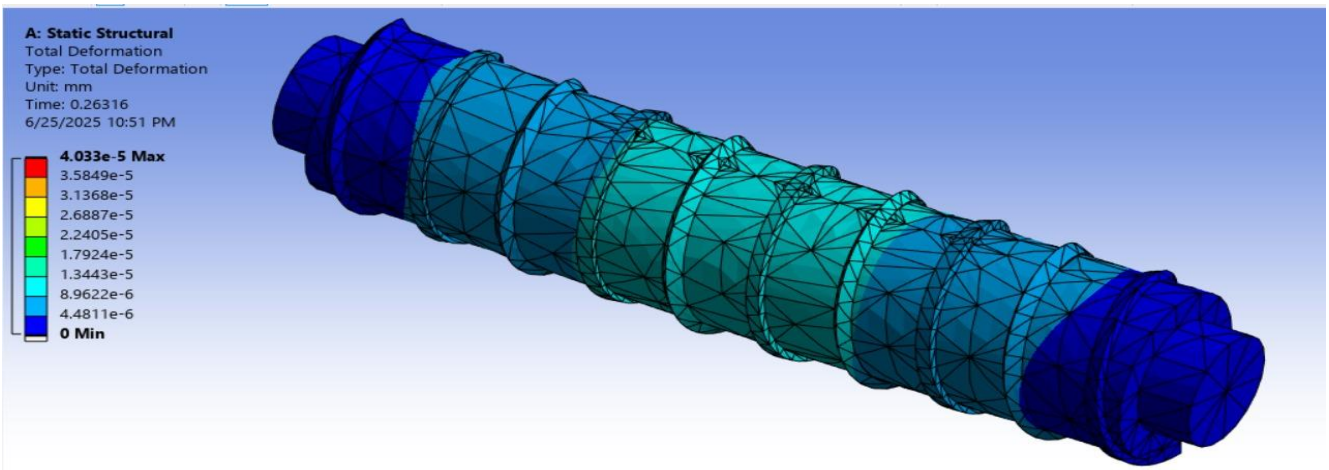

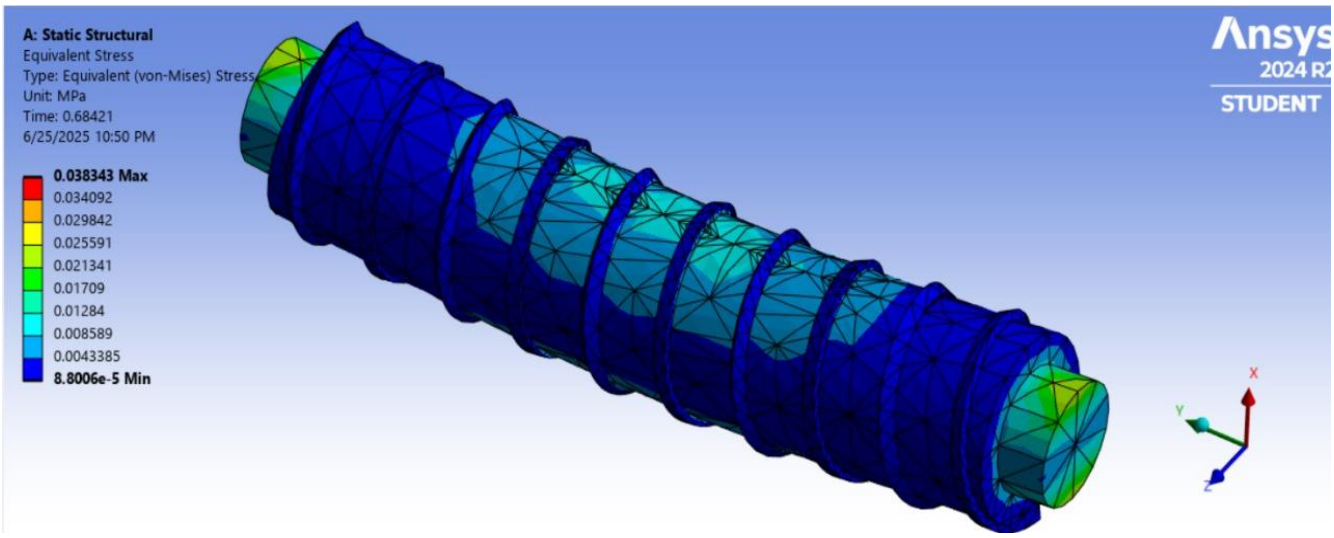

5.3 Design calculation

1) Shaft rotating:

- shaft dia. = 100mm = 0.1m
- shaft length = 400mm
- load (say weight of onions) = 60 × 70g = 70g = 0.07kg
- load on shaft = 0.07kg × 10 = 0.7N

2) Torque:

T=P×9550NT = \frac{P \times 9550}{N}T=NP×9550 T=0.2×955040T = \frac{0.2 \times 9550}{40}T=400.2×9550 =47.75 Nm= 47.75 \, Nm=47.75Nm

(Assume Power = 0.2 kW, N = 40rpm)

3) Cutting Speed:

V=π×D×NV = \pi \times D \times NV=π×D×N =π×0.1×40= \pi \times 0.1 \times 40=π×0.1×40 V=12.56 m/sV = 12.56 \, m/sV=12.56m/s

4) Blade force:

F=τ×AF = \tau \times AF=τ×A τ=shear stress of onion bed (very low estimate,

0.1 MPa)\tau = \text{shear stress of onion bed (very low estimate, 0.1 MPa)}

τ=shear stress of onion bed (very low estimate, 0.1 MPa)

.

Phase 6: -

6.1 Prototype Planning: -

#	Material	Properties /Reason for selecting the material	Part Name and Number
1	M S Metal rod, L bar	Machinable High strength	9
2	Acrylic Sheet	Thermal resistance, max tensile strength	8
3	Wood	---	1

6.2Bill of Materials

Material	size	quantity	prize
MS sheet (hopper)	0.5mm	2	---
MS sheet	0.8mm	3	---
Auger drill bit	30mm diameter 300mm length	1	900
Metal pipe/tube	Inner Dia 30.5mm Outer Dia 36.5mm	1	500
Electrical heating coil	---	2	1400
bearing	30mm	1	450
shaft	75mm diameter 600mm length	1	300
300 rpm DC motor	---	2	480
Motor drive (PWM) controller	---	2	200

12V power supply	---	1	700
Temperature control (REX 100)	---	1	1000
Thermal insulator	---	1	230
Main switch & wiring	---	---	100
Holder/ support	120mm long 5mm thick	4	----
Guide rollers	---	2	300
Nuts, bolts, washers	---	---	50
		Total: -	6510
		Around	7000/-

6.3Joining techniques/ methods:

#	Joining Method	Material to be joined	Resources required and specifications
1	Welding	Sheet Metal	40/80 2 sheet MS
2	Adhesives	Acrylic	M-SEAL

Flow Chart:

Prepare a tentative flow chart of the series of operations to be followed for prototyping:

[MS Sheet Metal, MS Rod and L Bar Selection]

↓

[Welding and Fabrication]

↓

[Shaft and Blade Mounting for Cutting Mechanism]

↓

[Manufacturing of Chassis (Hand Cutter, Mallet, Grinder, Welding Equipment)]

↓

[Assembly of Shaft, Blades and Chassis]

↓

[Testing, Calibration and System Modification]

Phase 7

7.1 Fabrication Pictures: -

7.3 Conclusion: -

The development of a power-operated onion detopper addresses the critical need for mechanization in post-harvest onion processing. Onion detopping, traditionally a labourintensive and time-consuming task, presents challenges related to inconsistency, labour shortages, and post-harvest losses. The study focuses on designing a compact, efficient, and user-friendly detopper that can be adopted by small to medium-scale farmers.

The machine consists of a feeding chute, a detopping unit with rotating rollers, and collection chutes for both the bulbs and the leaves. The rollers, configured as circular pipes and square tubes rotating in opposite directions, ensure effective leaf cutting while minimizing bulb damage. The structural design emphasizes ease of fabrication, mobility, and adaptability to various onion sizes and types. Results from development and testing indicate that design and operational parameters such as roller speed and slope significantly influence detopping efficiency, capacity, and bulb safety.

FE Analysis:

Operating Instructions:

Team Members:

Team Members
Abhinav Hegde
Kirangoud Biradar
Varun Teli
Darshan Lamdade
Sameer Chitnis
Akshay Kulkarni

Team Mentor:
Prof.Sridhar M
Prof.Praveen P

Contact:
Abhinav Hegde
6361961293

ONION DETOPPING MACHINE

Onion Detopping machine

Experience Engineering @
School of Mechanical
EngineeringKLETECH

KLE Technological University
Creating Value
Leveraging Knowledge

School of Mechanical Engineering

Minor Project Team #07

Introduction:

"A mechanized solution for efficient, precise, and labor-saving onion detopping, improving productivity and reducing post-harvest manual effort."

Background/Introduction

Onion is a major vegetable crop in India, contributing significantly to both domestic consumption and exports. Despite high production, post-harvest operations like detopping—removing dried foliage after curing—remain largely manual. This method is time-consuming, labor-intensive, and leads to inconsistent cuts and increased labor costs. Traditional hand tools, such as sickles, are still commonly used, requiring around 12.5 woman-hours per tonne. Improper detopping can also reduce onion storability due to microbial infections. Mechanization offers a practical solution to improve efficiency and reduce drudgery. To address these challenges, a realistic and cost-effective onion detopping machine was developed. The machine aims to deliver uniform cuts, reduce damage, and handle varying bulb sizes effectively, enhancing the overall productivity of onion farming.

Features:

- High Detopping Efficiency
- Helical Roller Cutting Mechanism
- Adjustable for Bulb Sizes
- Low Damage Rate
- Efficient Conveying System
- Electric Motor Powered
- High Output Capacity
- Labor and Cost Saving
- User-Friendly Design
- Locally Adaptable and Affordable

Product Specifications:

- Type: Electrically powered semi-automatic onion detopping machine
- Detopping Mechanism: Helical roller with integrated cutting blade
- Detopping Efficiency: $98.44 \pm 1.07\%$
- Bulb Damage Rate: $2.05 \pm 0.45\%$
- Conveying Efficiency: $97.60 \pm 1.02\%$
- Output Capacity: 372.60 ± 13.95 kg/h
- Power Source: Electric motor
- Cutting Tool Type: Cylindrical helical roller blade
- Labor Requirement: Operated by a single person
- Safety Features: Protective guards and stable base for operator safety

3D Model:

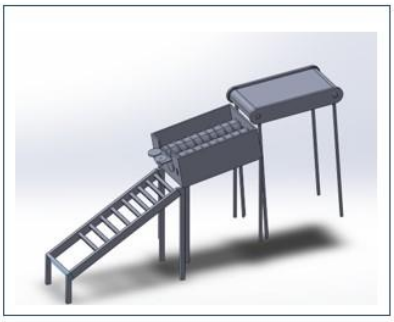

Mechanism

The onion detopping machine operates through a coordinated system of feeding, conveying, and cutting components powered by an electric motor. Onions are first fed through an inlet chute onto a belt or oscillating conveyor that orients them with the tops facing downward. As the onions move forward, rotating fingers assist in proper alignment for accurate detopping. The core of the mechanism is a helical roller with a sharp cutting edge, rotating in the opposite direction to a support roller. This setup grips the onion bulbs firmly while pulling and shearing the dried tops cleanly.