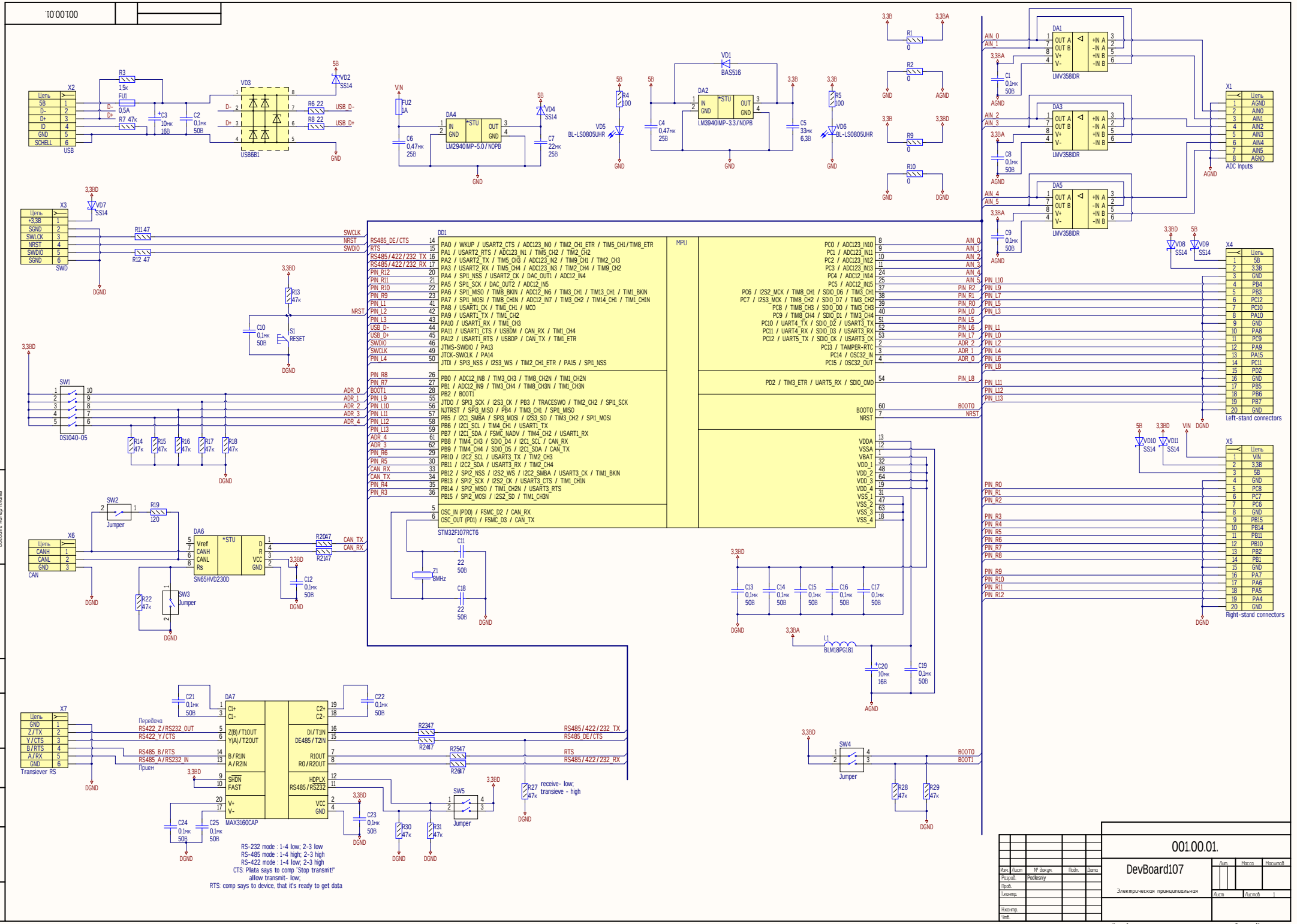
001.00.01.
X2
Цепь
5В
D-
D+
ID
GND
SCHELL
USB
R3 1.5к
FU1 0.5А
R7 47к
C3 10мк 16В
C2 0.1мк 50В
VD3
USB6B1
VD2 SS14
R6 22
R8 22
USB_D-
USB_D+
GND
VIN
FU2 1А
C6 0.47мк 25В
DA4
IN
*STU
OUT
GND
LM2940IMP-5.0/NOPB
VD4 SS14
C7 22мк 25В
R4 100
VD5 BL-LS0805UHR
C4 0.47мк 25В
VD1 BAS516
DA2
LM3940IMP-3.3/NOPB
C5 33мк 6.3В
R5 100
VD6 BL-LS0805UHR
3.3В
3.3ВА
R1 0
R2 0
R9 0
R10 0
AGND
DGND
DA1
DA3
DA5
OUT A
OUT B
V+
V-
+IN A
-IN A
+IN B
-IN B
LMV358IDR
AIN_0
AIN_1
AIN_2
AIN_3
AIN_4
AIN_5
C1 0.1мк 50В
C8 0.1мк 50В
C9 0.1мк 50В
X1
ADC Inputs
X3
SWD
VD7 SS14
R11 47
R12 47
SWCLK
NRST
SWDIO
R13 47к
C10 0.1мк 50В
S1 RESET
SW1
DS1040-05
ADR_0
ADR_1
ADR_2
ADR_3
ADR_4
R14 47к
R15 47к
R16 47к
R17 47к
R18 47к
DD1
RS485_DE/CTS
RTS
RS485/422/232_TX
RS485/422/232_RX
PIN_R12
PIN_R11
PIN_R10
PIN_R9
PIN_L1
PIN_L2
PIN_L3
USB_D-
USB_D+
SWDIO
SWCLK
PIN_L4
PIN_R8
PIN_R7
BOOT1
PIN_L9
PIN_L10
PIN_L11
PIN_L12
PIN_L13
ADR_4
ADR_3
PIN_R6
PIN_R5
CAN_RX
CAN_TX
PIN_R4
PIN_R3
PA0 / WKUP / USART2_CTS / ADC123_IN0 / TIM2_CH1_ETR / TIM5_CH1/TIM8_ETR
PA1 / USART2_RTS / ADC123_IN1 / TIM5_CH2 / TIM2_CH2
PA2 / USART2_TX / TIM5_CH3 / ADC123_IN2 / TIM9_CH1 / TIM2_CH3
PA3 / USART2_RX / TIM5_CH4 / ADC123_IN3 / TIM2_CH4 / TIM9_CH2
PA4 / SPI1_NSS / USART2_CK / DAC_OUT1 / ADC12_IN4
PA5 / SPI1_SCK / DAC_OUT2 / ADC12_IN5
PA6 / SPI1_MISO / TIM8_BKIN / ADC12_IN6 / TIM3_CH1 / TIM13_CH1 / TIM1_BKIN
PA7 / SPI1_MOSI / TIM8_CH1N / ADC12_IN7 / TIM3_CH2 / TIM14_CH1 / TIM1_CH1N
PA8 / USART1_CK / TIM1_CH1 / MCO
PA9 / USART1_TX / TIM1_CH2
PA10 / USART1_RX / TIM1_CH3
PA11 / USART1_CTS / USBDM / CAN_RX / TIM1_CH4
PA12 / USART1_RTS / USBDP / CAN_TX / TIM1_ETR
JTMS-SWDIO / PA13
JTCK-SWCLK / PA14
JTDI / SPI3_NSS / I2S3_WS / TIM2_CH1_ETR / PA15 / SPI1_NSS
PB0 / ADC12_IN8 / TIM3_CH3 / TIM8_CH2N / TIM1_CH2N
PB1 / ADC12_IN9 / TIM3_CH4 / TIM8_CH3N / TIM1_CH3N
PB2 / BOOT1
JTDO / SPI3_SCK / I2S3_CK / PB3 / TRACESWO / TIM2_CH2 / SPI1_SCK
NJTRST / SPI3_MISO / PB4 / TIM3_CH1 / SPI1_MISO
PB5 / I2C1_SMBA / SPI3_MOSI / I2S3_SD / TIM3_CH2 / SPI1_MOSI
PB6 / I2C1_SCL / TIM4_CH1 / USART1_TX
PB7 / I2C1_SDA / FSMC_NADV / TIM4_CH2 / USART1_RX
PB8 / TIM4_CH3 / SDIO_D4 / I2C1_SCL / CAN_RX
PB9 / TIM4_CH4 / SDIO_D5 / I2C1_SDA / CAN_TX
PB10 / I2C2_SCL / USART3_TX / TIM2_CH3
PB11 / I2C2_SDA / USART3_RX / TIM2_CH4
PB12 / SPI2_NSS / I2S2_WS / I2C2_SMBA / USART3_CK / TIM1_BKIN
PB13 / SPI2_SCK / I2S2_CK / USART3_CTS / TIM1_CHIN
PB14 / SPI2_MISO / TIM1_CH2N / USART3_RTS
PB15 / SPI2_MOSI / I2S2_SD / TIM1_CH3N
OSC_IN (PD0) / FSMC_D2 / CAN_RX
OSC_OUT (PD1) / FSMC_D3 / CAN_TX
MPU
PC0 / ADC123_IN10
PC1 / ADC123_IN11
PC2 / ADC123_IN12
PC3 / ADC123_IN13
PC4 / ADC12_IN14
PC5 / ADC12_IN15
PC6 / I2S2_MCK / TIM8_CH1 / SDIO_D6 / TIM3_CH1
PC7 / I2S3_MCK / TIM8_CH2 / SDIO_D7 / TIM3_CH2
PC8 / TIM8_CH3 / SDIO_D0 / TIM3_CH3
PC9 / TIM8_CH4 / SDIO_D1 / TIM3_CH4
PC10 / UART4_TX / SDIO_D2 / USART3_TX
PC11 / UART4_RX / SDIO_D3 / USART3_RX
PC12 / UART5_TX / SDIO_CK / USART3_CK
PC13 / TAMPER-RTC
PC14 / OSC32_IN
PC15 / OSC32_OUT
PD2 / TIM3_ETR / UART5_RX / SDIO_CMD
BOOT0
NRST
VDDA
VSSA
VBAT
VDD_1
VDD_2
VDD_3
VDD_4
VSS_1
VSS_2
VSS_3
VSS_4
STM32F107RCT6
Z1 8МГц
C11 22 50В
C18 22 50В
C13 0.1мк 50В
C14 0.1мк 50В
C15 0.1мк 50В
C16 0.1мк 50В
C17 0.1мк 50В
L1 BLM18PG181
C20 10мк 16В
C19 0.1мк 50В
X4
Left-stand connectors
VD8 SS14
VD9 SS14
X5
Right-stand connectors
VD10 SS14
VD11 SS14
VIN
PIN_L10
PIN_L9
PIN_L7
PIN_L5
PIN_L3
PIN_L1
PIN_L0
PIN_L2
PIN_L4
PIN_L6
PIN_L8
PIN_L11
PIN_L12
PIN_L13
PIN_R0
PIN_R1
PIN_R2
PIN_R3
PIN_R4
PIN_R5
PIN_R6
PIN_R7
PIN_R8
PIN_R9
PIN_R10
PIN_R11
PIN_R12
SW2 Jumper
R19 120
X6
CAN
DA6
Vref
CANH
CANL
Rs
D
R
VCC
GND
SN65HVD230D
R20 47
R21 47
CAN_TX
CAN_RX
C12 0.1мк 50В
R22 47к
SW3 Jumper
X7
Transiever RS
Передача
RS422_Z/RS232_OUT
RS422_Y/CTS
RS485_B/RTS
RS485_A/RS232_IN
Прием
DA7
C1+
C1-
Z(B)/T1OUT
Y(A)/T2OUT
B/R1IN
A/R2IN
SHDN
FAST
V+
V-
MAX3160CAP
C2+
C2-
DI/T1IN
DE485/T2IN
R1OUT
RO/R2OUT
HDPLX
RS485/RS232
VCC
GND
C21 0.1мк 50В
C22 0.1мк 50В
C23 0.1мк 50В
C24 0.1мк 50В
C25 0.1мк 50В
R23 47
R24 47
R25 47
R26 47
RS485/422/232_TX
RS485_DE/CTS
RTS
RS485/422/232_RX
SW5 Jumper
R30 47к
R31 47к
R27 47к
receive- low;
transieve - high
RS-232 mode : 1-4 low; 2-3 low
RS-485 mode : 1-4 high; 2-3 high
RS-422 mode : 1-4 low; 2-3 high
CTS: Plata says to comp "Stop transmit"
allow transmit- low;
RTS: comp says to device, that it's ready to get data
SW4 Jumper
R28 47к
R29 47к
001.00.01.
DevBoard107
Электрическая принципиальная
Изм. Лист № докум. Подп. Дата
Разраб. Podlesniy
Пров.
Т.контр.
Н.контр.
Утв.
Лит. Масса Масштаб
Лист Листов 1
Копировал
Формат A1
Перв. примен.
Введите номер платы
Справ. №
Подп. и дата
Инв. № дубл.
Взам. инв. №
Подп. и дата
Инв. № подл.
Разработал
Нормоконтроль

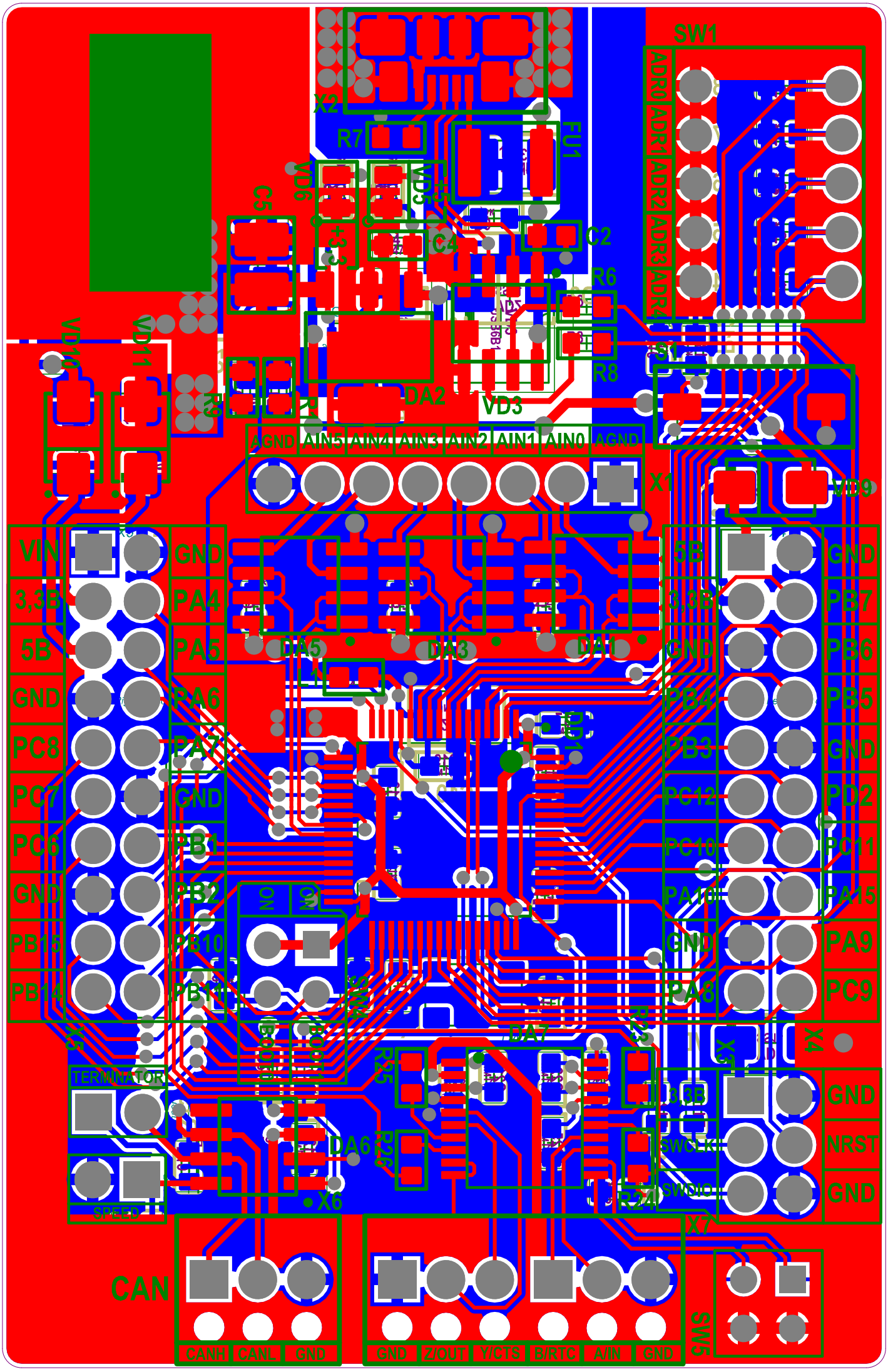
SW1
ADR0
ADR1
ADR2
ADR3
ADR4
X2
R7
FU1
VD6
VD3
C5
C3
C4
C2
R6
R8
VD10
VD11
DA2
VD3
AGND
AIN5
AIN4
AIN3
AIN2
AIN1
AIN0
AGND
X1
VD9
VIN
GND
3,3B
PA4
5B
PA5
GND
PA6
PC8
PA7
PC7
GND
PC6
PB1
GND
PB2
PB15
PB10
PB14
PB11
5B
GND
3,3B
PB7
GND
PB6
PB4
PB5
PB3
GND
PC12
PD2
PC10
PC11
PA15
PA9
PC9
DA5
DA3
DA1
DA7
DA6
X3
X4
X5
TERMINATOR
SPEED
3,3B
GND
NRST
SWCLK
SWDIO
GND
X6
X7
CAN
CANH
CANL
GND
GND
Z/OUT
Y/CTS
B/RTC
A/IN
GND
SW5