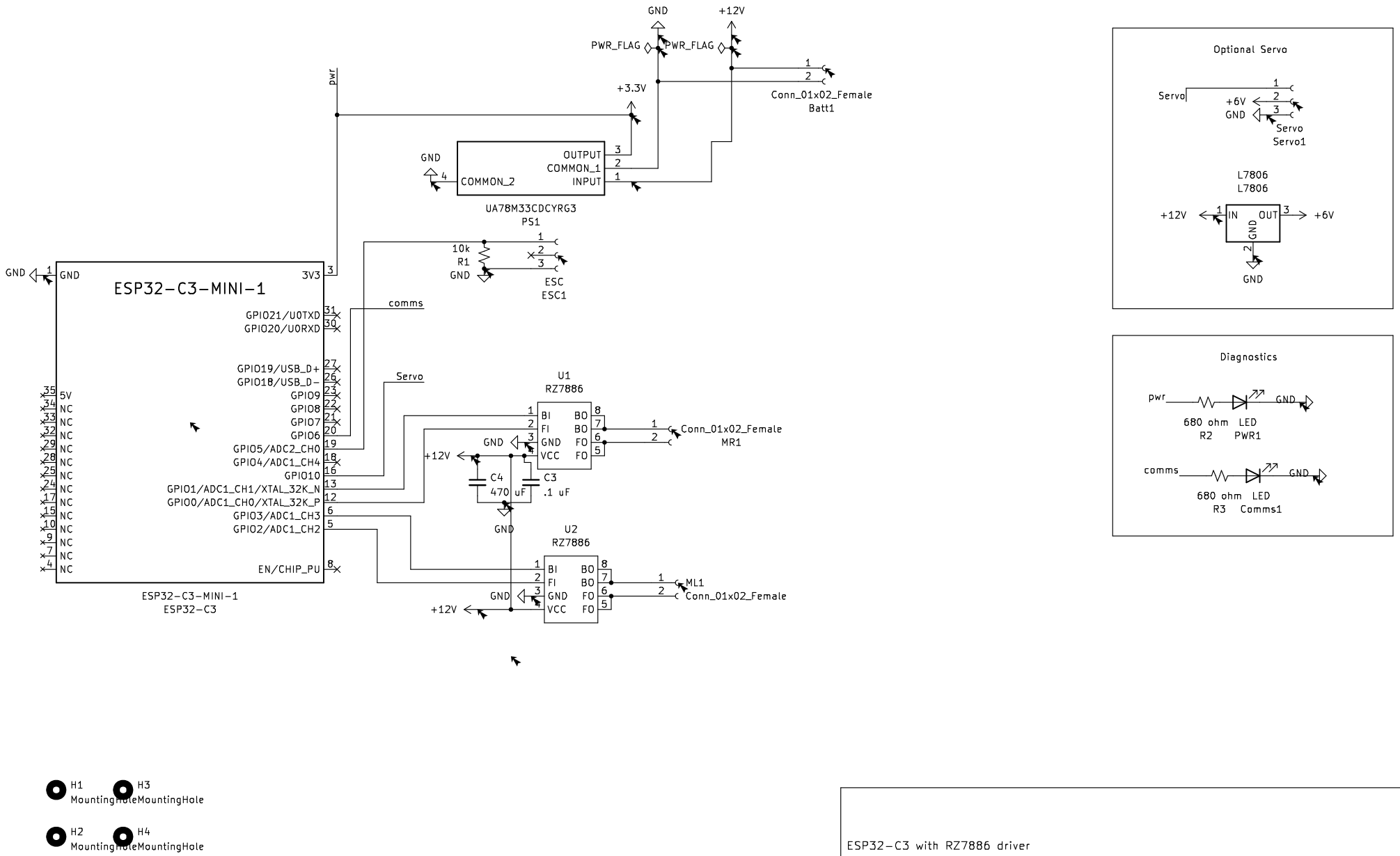


ESP32-C3 with RZ7886 driver

**Vector Space**

Sheet: /

File: receiver.kicad_sch

***Title: VS Robot Combat Receiver***

| | | |
|---|---|---|
| Size: A4 | Date: | **Rev: 5** |
| KiCad E.D.A. kicad 7.0.6 | | Id: 1/1 |