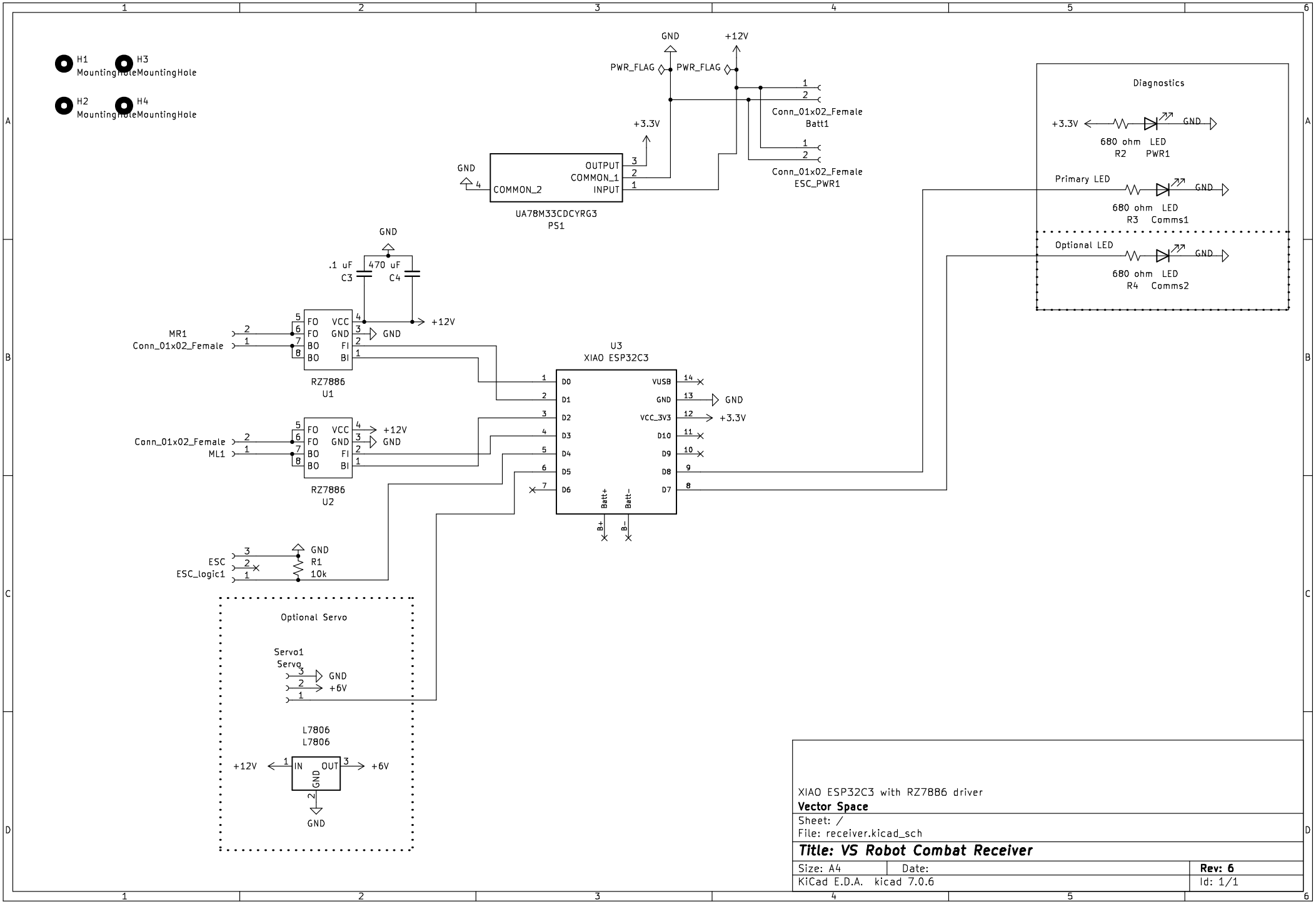
H1 MountingHole
H3 MountingHole
H2 MountingHole
H4 MountingHole
GND
+12V
PWR_FLAG
PWR_FLAG
Conn_01x02_Female
Batt1
Conn_01x02_Female
ESC_PWR1
+3.3V
GND
OUTPUT
COMMON_1
INPUT
COMMON_2
UA78M33CDCYRG3
PS1
Diagnostics
+3.3V
GND
680 ohm LED
R2 PWR1
Primary LED
GND
680 ohm LED
R3 Comms1
Optional LED
GND
680 ohm LED
R4 Comms2
GND
.1 uF
C3
470 uF
C4
+12V
MR1
Conn_01x02_Female
FO VCC
FO GND
BO FI
BO BI
GND
RZ7886
U1
U3
XIAO ESP32C3
D0
D1
D2
D3
D4
D5
D6
VUSB
GND
VCC_3V3
D10
D9
D8
D7
Batt+
Batt-
B+
B-
+12V
GND
Conn_01x02_Female
ML1
RZ7886
U2
ESC
ESC_logic1
GND
R1
10k
Optional Servo
Servo1
Servo
GND
+6V
L7806
L7806
+12V
IN
OUT
GND
+6V
GND
XIAO ESP32C3 with RZ7B86 driver
Vector Space
Sheet: /
File: receiver.kicad_sch
Title: VS Robot Combat Receiver
Size: A4
Date:
Rev: 6
KiCad E.D.A. kicad 7.0.6
Id: 1/1