ESI Module I

Introduction

Formula Student events, just like any other Formula event, have very stringent and thorough rules to comply for any team to be eligible to participate in these competitions and here comes our subsystem, Electronic System Integration or previously known as HV-LV which throughout the tenure you will refer to as *'The ESI'* . We deal with both the Low Voltage and High Voltage circuitry to not just create a successfully running car but also an electrically rule compliant car. Either it is precharge, shutdown circuitry or error detection under various possible scenarios we deal with them, to maintain safety of both the driver and the car. We achieve all these with our self designed PCBs and a well thought Harness: the back bone of the electrical system of the car.

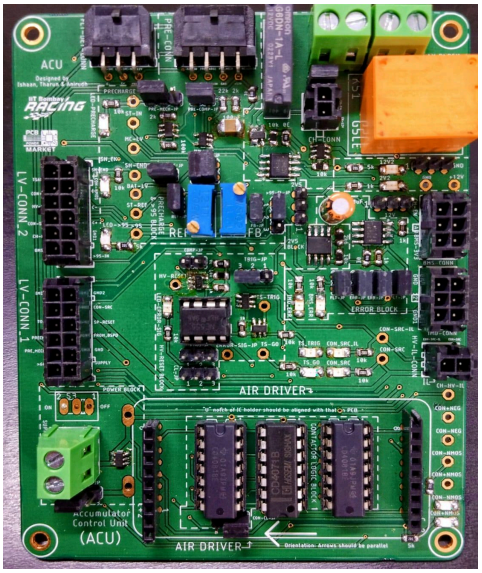

The subsystem deals with a lot of PCBs from as simple a board as Discharge board to as complex as ACU. As a member of our subsystem your task would be to design, test, and ensure all the PCBs not only function well on their own but also when integrated with the whole system of our car.

To achieve an efficient integration of all the PCBs and sensors, a meticulously designed wiring harness is necessary. This harness should facilitate streamlined and organised cable routing while providing robust protection against potential hazards and mitigating the effects of wear and tear on the wires and connectors.

Remember, the rulebook is not just a set of guidelines, it's our roadmap to success. As a member of ESI, it's your responsibility to ensure every line of the rulebook is a solution waiting to be implemented in our car. While ESI covers most sections, every subsystem must contribute to making the car rule-compliant from their side.

It is therefore recommended and will be a compulsion to go through the document periodically as your tenure progresses in the Racing Team.

IMPORTANT: Document everything you do to refer to it in the future.

FS Rulebook

You can find the document here .
As this will be your first time reading the competition rulebook, it can be an overwhelming experience.
We advise you to be patient with it. There will be a lot of rules that wouldn't make sense, but that's fine. You will learn about them as you will work on the car :) Some general guidelines regarding the rulebook:
- The rulebook is divided into various sections catering to different aspects of competition:

- A (Administrative Regulations)
- T (General Technical Requirements)
- EV (Contains all the necessary requirements for a rule-compliant EV vehicle)
- IN (Technical Inspections)
- S,D (Events: Scoring, events: static and dynamic, penalties)

- Understanding the rulebook is an iterative process. We don't expect you to understand every rule that you come across but inculcating a habit of going through it periodically is the main intent of this introduction.

The following are some topics related to the rulebook for you to attempt, remember that rules only exist if they have some practical relevance...

Galvanic Isolation:

Please refer to EV 1, EV 6.3 for this section.

1.1 What is meant by galvanic isolation? Why do you think isolation is crucial for any EV car?

1.2 The following is a circuit proposed by a friend of yours, in an attempt to measure the TS voltage of the Motor Controller (i.e, MC+ and MC-) to detect whether it is charged to 95% of TS voltage and control the precharge circuitry.

Comment whether the given circuit is rule compliant (Do mention specific rule numbers, if possible, in your responses).

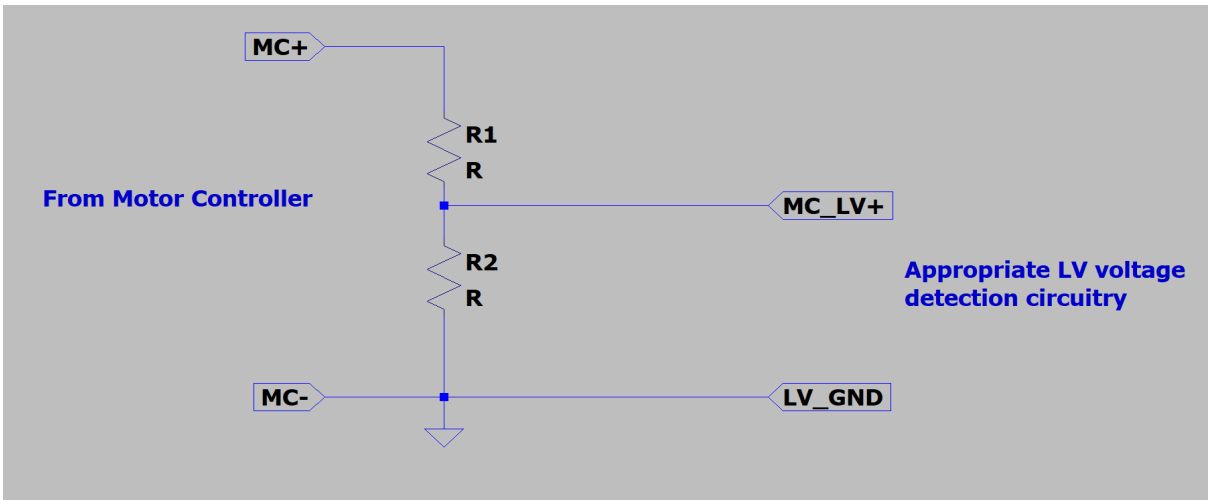

1.3 Suppose there is a system implausibility that has made an EV car stop. Upon inspection from afar, you see that a Red and a Green LED present in the cockpit are glowing, but there are no labels on them. All other cockpit mounted LEDs are not glowing. Judging from the cockpit LEDs alone, it has been reported to you that there was an isolation failure.

(i) What is the prescribed device that detects any isolation failure in the TS circuit? What should be the label on the cockpit lights? Mention the rule as your justification for the label names. (Hint: search in the appendix of this doc OR enthu hai toh search in the Rulebook itself)
(ii)From the AMS module, calculate the max. response value (in ohms) that such a device should have for our car.
(iii)What should be the necessary course of action of any safety circuit in such a case?

Introduction to OptoCouplers:

Optocouplers provide a great way of gauging/interacting with high voltage circuitry, all while maintaining voltage isolation between HV-LV. Go through the working principle and internal circuitry of the Optocouplers from here:

- Link 1
- Link 2
- Link 3

2.1: Redesign the faulty circuit that was presented earlier, using this Optocoupler/OptoMOS in the circuit. Please justify your calculations of all the relevant components used.

Shutdown Circuit:

From the sessions and discussions we took, it might have been evident by now that the circuitry that drives the contactors (AIR+ and AIR-), the precharge and the discharge relay is the Shutdown Circuit! A good FS team is one whose SDC (Shutdown Circuit) is very robust and reliable. EV 6.1 covers in great detail all the finer points of the SDC, and we advise you to at least go through it, even though many things might not make sense to you.

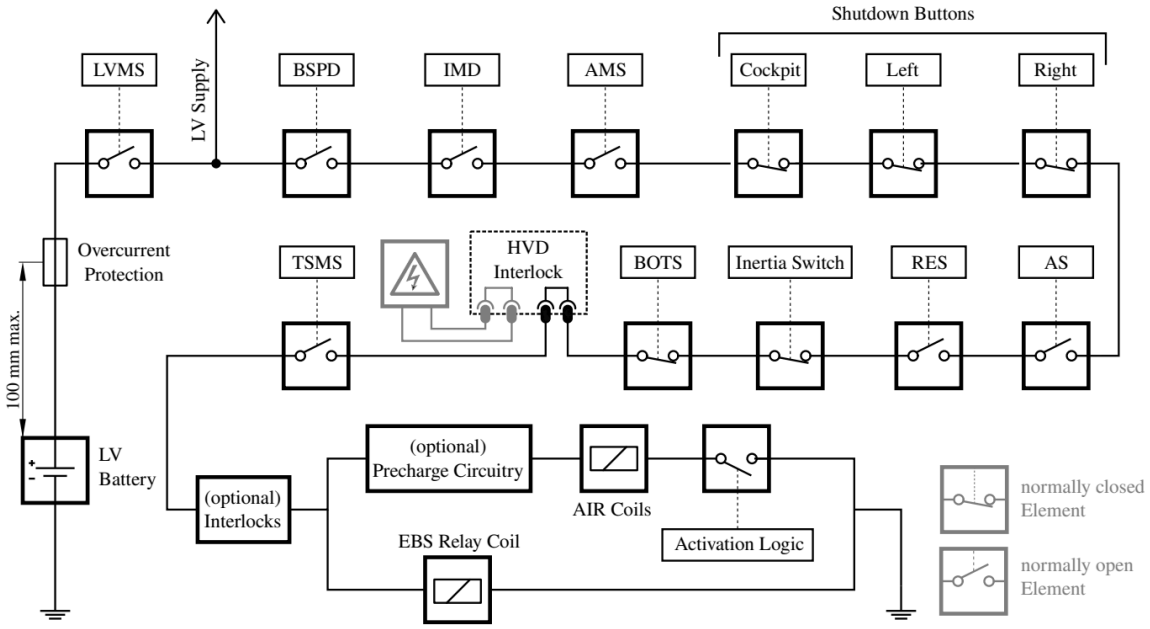

Figure 22: Explanatory example schematic of the required Shutdown Circuit (SDC)

From the schematic it is fair to conclude that this is a quite complex circuit topology and most of our testing and BTs are due to this very thing only 🥲. Here is introduction to some elements of the SDC:

- LVMS (refer to T11.3): It is the very first element of the shutdown circuit which powers the SDC and activates all the LV circuitry on the car.
- Shutdown Buttons (refer to T11.4): These are mechanical push-pull or push-rotate buttons mounted on either side of the car and on the driver's cockpit. These allow the driver or any authorised person present outside the car to open the shutdown circuit.
- IMD: This too opens the shutdown circuit in case of faults discussed in the previous section.
- AMS: The Accumulator Management System monitors the cell voltages, temperatures and currents, and opens the SDC, if any of these parameters go out of bound over a range of time. (Much of this will be covered in the AMS Module)
- Inertia Switch (Refer to T11.5): It is a crash-sensing switch that opens the shutdown circuit when the car experiences a heavy jerk.

- BOTS (Refer to T6.2) : BOTS or Brake Over-Travel Switch is useful to detect any abnormalities with the brake pedal. This switch is kept behind the brake pedal, which is usually not in reach even during maximum pedal travel. However, in case the brakes don't work properly, say in case of leakage of brake fluids, the brake pedal can travel even further due to the loss of pressure. Thus, the switch gets pressed and the SDC is opened.
- Interlocks: An Interlock is defined as a connector/switch that is capable of mechanically disconnecting two independent circuits at the same time, usually HV and LV circuits. We implement HVD and other interlocks to ensure that breaking of any HV connections is detected as a critical failure of the system, and correspondingly, the SDC is opened.
- HVD (Refer to EV4.8): HVD or High-Voltage Disconnect is a rotate-pull switch that is an interlock. See the working of HVD here.
- TSMS (Refer to EV 6.2): TSMS or Tractive System Master Switch is, similar to LVMS, is a tagout-lockout switch, that when SDC is complete, powers the coils of precharge, discharge relays and that of AIRs. It is the last element of the shutdown circuit.
- (Ignore RES, AS and EBS coil, as they are relevant to the driverless division of the team)

3.1 Should both the contactors be closed at the same time? <Inrush current and chattering>If yes then answer the appropriate delay. Justify your response.

3.2 The button/signal responsible for additional activation logic is called HV_RESET in our taxonomy. Is HV_RESET part of our shutdown circuit? If yes, explain how it affects SDC and do mention the exact rule that it complies. Refer to EV 4.11.4 of the rulebook or its snippet provided here.

3.3 Rule EV 6.1.4 compels us to have TSMS as the final element of the shutdown circuit before AIRs and other relays. Explain any reasoning that you can think of for this compliance.

Closing Remarks:

This is the end of part I of the ESI Module series. Some additional remarks on SDC: Shutdown circuit is best understood by having a thorough knowledge of the car's electrical harness. Hence, we would encourage you to go to the lab sometime (preferably in a group) and see the actual order of SDC elements in our car.

Appendix:

MKT-E-13064F_1 (Page 2 of 2)

◆ What's "Service Plug"?

Physically interrupts the electric circuit and protects operators from high voltage shock accidents.

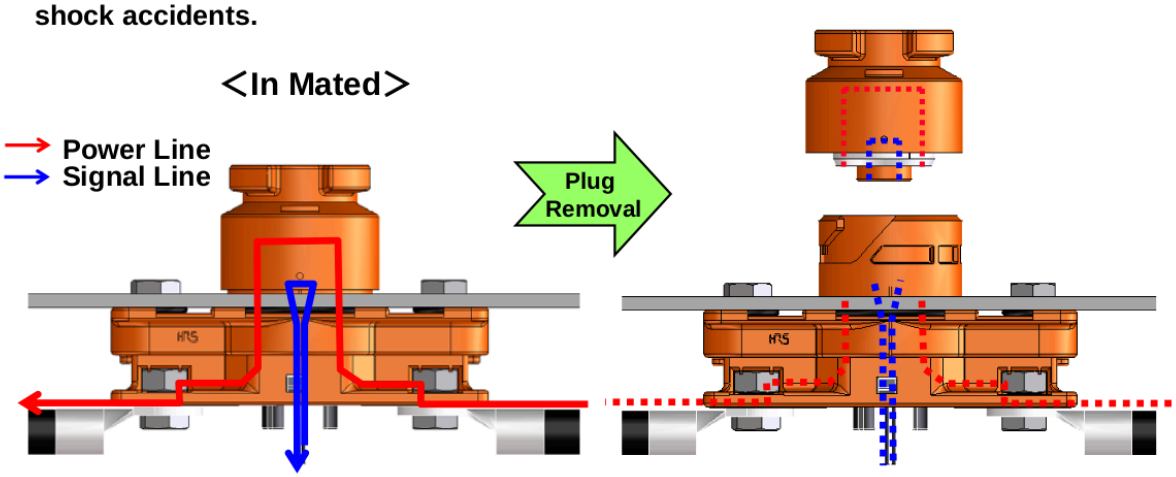

Plug removal physically interrupts the circuit.

EV 4.11 Activating the Tractive System

EV 4.11.1 The TS is active if any of the AIRs or the pre-charge relay is closed.

EV 4.11.2 The driver must be able to activate and deactivate the TS from within the cockpit without the assistance of any other person.

EV 4.11.3 The ASR must be able to activate the TS from outside the vehicle with an external TS activation button in proximity to the TSMS if and only if the ASMS is in "On" position.

EV 4.11.4 Closing the SDC by any part defined in EV 6.1.2 must not (re-)activate the TS. Additional action must be required.

EV 4.11.5 The AS must not be able to (re-)activate the TS.

EV 4.11.6 The vehicle is in Ready-to-drive (R2D) mode as soon as the motor(s) will respond to the input of the APPS.

EV 4.11.7 After the TS has been activated, additional actions must be required by the driver to set the vehicle to R2D mode, e.g. pressing a dedicated start button. The transition to R2D mode must only be possible during the actuation of the mechanical brakes and a simultaneous dedicated additional action.

EV 4.11.8 The R2D mode must be left immediately when the SDC is opened.

Every vehicle must have an IMD installed in the TS system.

The IMD must be a Bender A-ISOMETER® iso-F1 IR155-3203, -3204, -4203, or -4204, or a Bender ISOMETER® iso165C-1, or equivalent IMD approved for automotive use. Equivalency may be approved by the officials based on the following criteria: robustness to vibration, operating temperature range, IP rating, availability of a direct output, a self-test facility, and must not be powered by the system that is monitored.

The response value of the IMD must be set to $\geq 500\,\Omega/v$, related to the maximum TS voltage.

The IMD must be connected on the vehicle side of the AIRs.

One IMD chassis ground measurement line must be connected to the grounded TSAC or the respective grounded enclosure of the IMD. The other chassis ground measurement line must be connected to the main hoop. Each connection must use a separate conductor, rated for at least maximum TS voltage. An open circuit in any of these ground measurement connections must result in an opened SDC.

In case of an insulation failure or an IMD failure, the IMD must open the SDC. This must be done without the influence of any programmable logic. See also EV 6.1.6 regarding the re-activation of the TS after an insulation fault.

A red indicator light in the cockpit that is easily visible from inside and outside the cockpit even in bright sunlight and clearly marked with the lettering "IMD" must light up if and only if the IMD opens the SDC. It must stay illuminated until the error state has been manually reset, see EV 6.1.6. Signals controlling this indicator are SCS, see T 11.9.

A green indicator light in the cockpit that is easily visible even in bright sunlight and clearly marked with "TS off" must light up if TSAL green light is on, see EV 4.10.3.

We hope you enjoy the problems in this module, and if you want to explore more, please feel free to approach us.
For doubts:

1. Utkarsh 8724967221 (DE)
2. Suyash 7008816783 (DE)
3. Ruchi 7424818094 (DE)
4. Riddhi 7024186825 (JDE)
5. Varun 7978049171 (JDE)