Low Power ALU Design using Pre-Computational LUT for RV32M Processor

Mirza Amanullah Baig
Electronics and Communication Engineering Dept.
National Institute of Technology, Rourkela
Rourkela, India

Adyasha Mishra
Electronics and Communication Engineering Dept.
National Institute of Technology, Rourkela
Rourkela, India

Dr. Santanu Sarkar
Electronics and Communication Engineering Dept.
National Institute of Technology, Rourkela
Rourkela, India

2025 IEEE 6th India Council International Subsections Conference (INDISCON) | 979-8-3315-1504-1/25/$31.00 ©2025 IEEE | DOI: 10.1109/INDISCON66021.2025.11253853

***Abstract*—This paper presents a Look Up Table (LUT) based pre-computational (PC) Arithmetic Logic Unit (ALU) for RV32M. The proposed ALU provides low power consumption and high speed for application specific purpose where the input of the ALU is repeated several times. The proposed ALU integrates LUT based on pre-computational mechanism with the multiplier and control logic unit which store the computational results of frequent operands. The system avoids unnecessary arithmetic operations, thereby reducing the real time computations allowing to increase speed and reduce dynamic power consumption. Simulation results shows substantial reduction in power consumption without compromising much in the operational speed proposed ALU design making it suitable for energy-constrained applications with frequent operands such as DSP and CNN based application. This pre-computation technique gives promising direction for enhancing energy efficiency in processor design.**

***Index Terms*—ALU, Low Power ALU, Pre-Computational ALU, LUT based ALU, RISCV, RV32M, RV32I.**

I. Introduction

Over the decades, work has been carried out to optimize a processor by trading off between area, power, and speed. A processor is basically the brain of the PC that tells it how to execute the instructions. The processor is basically a digital circuit composed of combinational and sequential circuits. The combinational circuit is a digital circuit where the outputs depend upon current inputs, whereas for a sequential circuit, the present output depends on present inputs and past outputs as well, due to which a memory unit is required in a sequential circuit.

The ISA (Instruction Set Architecture) defines a processor's underlying hardware; basically, it tells you how to execute the code of the software running on it. Among the ISAs, they are majorly classified into two different types: i) RISC (Reduced Instruction Set Computing) and ii) CISC (Complex Instruction Set Computing). Some of the advantages of RISC over CISC include the fact that RISC is executed faster and involves a simple control unit [1]. It was originally developed at the University of California, Berkeley. Unlike other ISAs like x86 and ARM, the open source architecture [2] makes it widely available, and it has grown rapidly because there is no license fee. RISC-ISA consists of a base modular set with extensions that can perform certain specific applications.The RV32I, often known as RVI, is the base integer instruction set for 32-bit processors and is part of the modular set of instruction subsets defined by the RISC-V architecture. For carrying out arithmetic, logical, control flow, and memory access tasks, it contains a collection of 47 instructions. RV32I is designed to be simple and efficient, therefore it does not support complex operations like multiplication or floating-point arithmetic. Instead, it uses optional extensions like 'M' and 'F'. Because RISC-V is modular, designers can create unique processors by adding extensions only when needed, which makes RV32I a perfect starting point for embedded, low-power, and application-specific systems. One of its variations is called RV32M, which is the 32-bit RISC-V ISA base (RV32M) with the "M" extension added to provide integer division and multiplication. For microcontrollers and embedded systems that need more processing power than the RV32M base, like those used in control systems, signal processing, and real-time applications, this makes the RV32M especially well-suited. Because of characterizations such as modularity and extensibility, the performance of RISC-V can be widely extended, and it can support additional functions. Although RISC-V is popular, there are a few problems associated with it and it is being developed.

Generally processor consists of 3 major units. The first is the control unit, which sends control signals to other units based on the instruction decode. The second one is the memory unit, which contains the data as well as instructions. The third and the most important unit of any processor is the ALU [3]. The arithmetic and logic unit performs different types of arithmetic functions, such as addition, subtraction, and multiplication,

979-8-3315-1504-1/25/$31.00 © 2025 IEEE

Authorized licensed use limited to: UNIVERSIDADE FEDERAL DE SANTA MARIA. Downloaded on March 29,2026 at 19:23:25 UTC from IEEE Xplore. Restrictions apply.

and logic functions, such as AND, OR, XOR, etc. Among all these, multiplication is particularly resource expensive. Since the ALU is the most critical unit, excessive power consumption here means that the complete system would rely on heavy power usage. In today's VLSI design and biomedical applications, more importance is given to power [4] rather than speed and area. Operations such as multiplication rely on heavy power, as they include repetitive addition and more memory units, which results in slowing down a processor. Many methods are introduced to improve power consumption by many authors on device level [5] [6] [7] as well as design level [8].

Instead of performing real-time multiplication operations, which consume a lot of memory and relies on heavy power consumption, look-up tables are an alternative that can be used to reduce power consumption. LUTs [9] are an important part of FPGAs, which store output values for different combinations of inputs. Compared to the traditional multiplication system, LUTs involve two major steps: one is addressing memory, and the other one is reading data. The memory consumed by LUTs depends on its depth chosen by the designer.

This paper introduces a hybrid ALU using LUT, for RISC-V architecture which consumes less power while performing multiplication operations. The rest of the paper is as follows: Section II describes the architecture of the time domain comparator, Section III shows simulation and results, and Section IV provides the conclusion.

II. Architecture

A. Architecture of Conventional ALU

Traditional ALeUs are built using the combinational circuit that includes adders, subtractors, and decoders, making the circuit highly complex and increasing latency. Conventional ALUs can be built in two types [10]: tree structure, where all the arithmetic and logic functions are calculated simultaneously and are input to a multiplexer, and the output value is updated based on the control value, which acts as a select line to the multiplexer. Another is the chain structure of an ALU; instead of using a large multiplexer, multiple numbers of 2×1 multiplexers are cascaded in series. The result of one operation is then passed to the other one, along with another operation, and in this manner all the values are connected to the multiplexers. When both designs are compared, the chain structure achieves a greater reduction in power when compared with the tree structure, but the delay increases in the chain because of multiplexer-based selection that adds latency to its path. But in VLSI design, the major issue is power consumption, because of which chain structure outlights tree structure.

In traditional ALUs, multiplication is performed using combinational logic by generating partial products and using multiple numbers of adders and logic gates, such as AND, and then summing it. This method is commonly known as Array Multiplier [11]. The logic behind this is straight forward, but it consumed high power and relied on heavy area consumption as well.

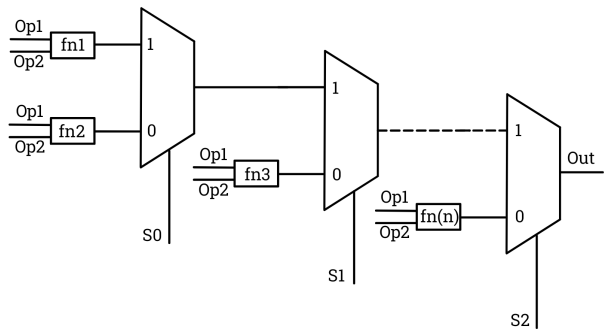

Fig. 1. Mux chain based conventional ALU architecture.

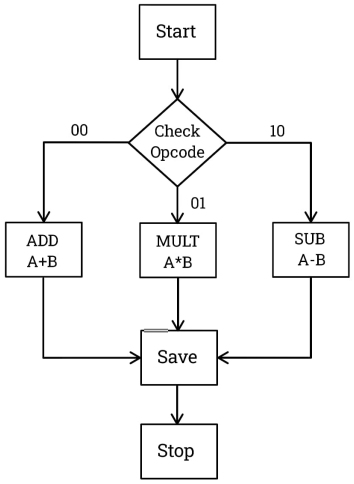

Fig. 2. Flowchart of conventional ALU operation.

Control logic in the ALU circuit is the part of the design that is responsible for what operation the ALU performs. Based on the value of control logic, the ALU performs the specific operation on its inputs and provides the output based on the result obtained. The control logic decodes the control signal, based on which the ALU will first select its input source and then will perform the specific arithmetic or logic operation.

B. LUTs in digital design

As mentioned, traditional ALUs calculate the result each time the specific operation is selected and then will assign it to the output. Because of which the delay and computing complexity increase. The other alternative to this is look-up tables. LUTs are fundamental building blocks, especially when it comes to the Field Programmable Gate Array. They are small memory units (mostly SRAM) that store an array of data. LUTs can store data for different input combinations for a particular operation, and instead of calculating every time, it will look up the precomputed value that was stored in it.

Authorized licensed use limited to: UNIVERSIDADE FEDERAL DE SANTA MARIA. Downloaded on March 29,2026 at 19:23:25 UTC from IEEE Xplore. Restrictions apply.

C. Proposed Pre-Computed LUT Based ALU Architecture

In our proposed architecture, it contains four modules. The first one is the basic RISC-V based ALU [12], the other module is the LUT with comparator unit, the third is the control logic that is responsible for activating both the ALU and the LUT with comparator unit, and the final is a 2x1 MUX, which selects between the ALU output and the LUT with comparator output based on the signal from the LUT with comparator unit.

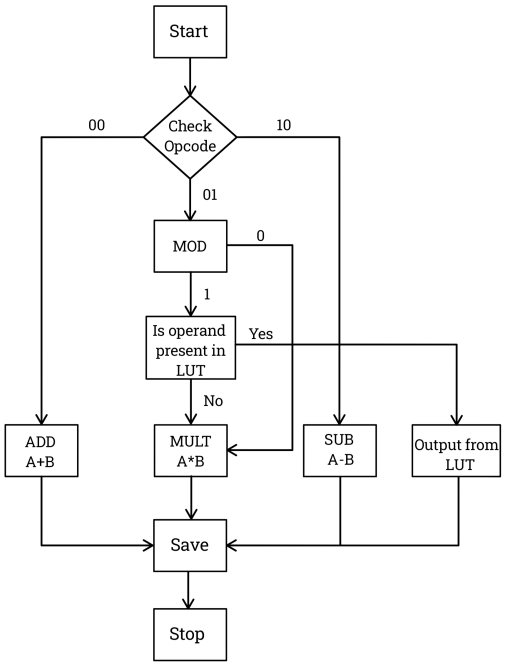

Fig. 3. Flowchart of Proposed PC-ALU Operation.

The ALU is built with a chain structure based on RISC-V ISA. The inputs to the ALU are two operands, A and B, of 8 units and an opcode of 5 bits that functions as the control signal. The decoder decodes the opcode, based on which it activates the required 2x1 MUX which then performs the specific function.

The LUT+Comparator unit initially stores 16 values of A,B and their product. After which if the valid signal is true, it then compares the present input with the stored values, and if same match occurs, it takes the LUT+Comp unit output from the loop up table corresponding to that input, and makes the Control signal high,which means a match has occured, otherwise it replaces a place in the LUT table, if a match doesn't occur.

The Control Logic unit present in this module is different from the control logic of the ALU. It takes Opcode and mode as input. Based on the value of opcode and mode it turns on Valid, whose table is present below. The control logic have two outputs. The first one is the valid signal, which tells the comparator unit to start comparing; the other one is ALU-Opcode. The value of ALU-Opcode depends on Opcode and mode as well as the control signal which comes from the LUT+Comp unit. When both the opcode and the mode

TABLE I
TRUTH TABLE OF PROPOSED PC ALU

OP	MOD	VLD	CTRL	ALU OP
1	0	0	x	1
0	0	0	x	1
0	1	0	x	1
1	1	1	1	$0 \rightarrow 0$
1	1	1	0	$0 \rightarrow 1$

are not high together, then irrespective of the value of the control signal, the ALU-Opcode stays high, which means that multiplication or any other arithmetic or logic operation is to be performed by the ALU unit, but in the case when my opcode and mode become high together, the ALU opcode checks for the control signal. Initially it will make the ALU-Opcode low and then will chech for Control signal, if my control signal is high, which means a match has been found, it will make the ALU-Opcode low and the output will be selected from LUT+Comp unit, but if a match has not been found and control signal is low, it will make ALU-Opcode high after 16 clock pulses, to make ALU high to compute the value of multiplication. This turning on or off of ALU according to the requirement saves a lot of power consumption.

The last simplest but the most important module is a 2x1 Multiplexer. In digital circuit a multiplexer is a circuit which is responsible for selecting one input as output from multiple inputs based on control signal. It selects between the output of LUT+Comp unit and ALU unit based on value of control logic from LUT+Comp unit which acts as the control signal.

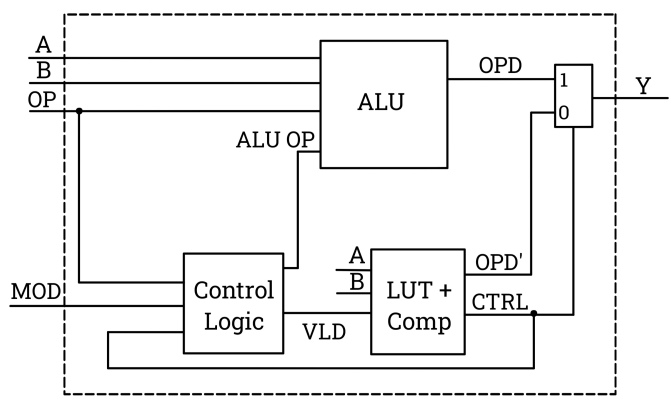

Fig. 4. Completer Architecture of Proposed PC ALU.

III. SIMULATION AND RESULTS

The performance of the proposed pre-computational ALU has been simulated in Xilinx Vivado. The output of ALU for multiplication using pre-computational LUT is illustrated in Fig. 5 From the figure it is shown that the multiplication is done correctly when operands are being different each time as well as when the operands repeats itself frequently resulting in output from LUT rather than actually performing multiplication in ALU itself which results in reduction of overall power consumption.

Authorized licensed use limited to: UNIVERSIDADE FEDERAL DE SANTA MARIA. Downloaded on March 29,2026 at 19:23:25 UTC from IEEE Xplore. Restrictions apply.

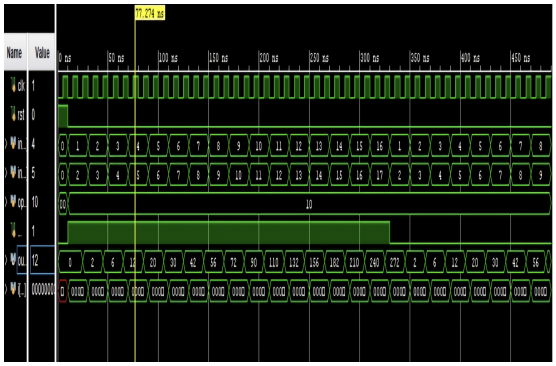

Fig. 5. Output Waveform for multiplication in proposed PC-ALU.

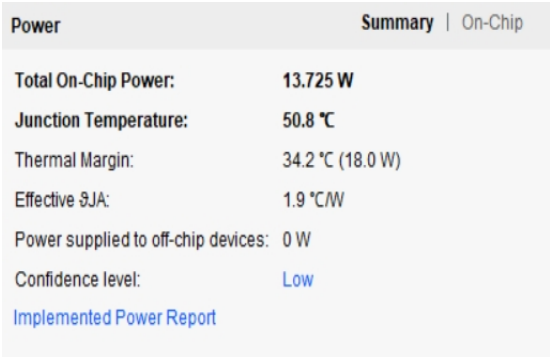

Power	Summary | On-Chip
Total On-Chip Power:	**13.725 W**
Junction Temperature:	**50.8 °C**
Thermal Margin:	34.2 °C (18.0 W)
Effective ϑJA:	1.9 °C/W
Power supplied to off-chip devices:	0 W
Confidence level:	Low
Implemented Power Report	

Fig. 6. Power consumption report for conventional RV32M ALU.

Due to the pre computation of output by comparing operands using bit comparator inside LUT, the proposed PC ALU provides improved power consumption compared to the conventional ALU. Comparison of power consumptions of proposed PC ALU and conventional ALU is shown in Fig. 7 for 50% of operand repeating itself. From the Fig. 6 it is shown conventional ALU consumes total on-chip power of 13.725W. Whereas, the proposed PC ALU consumes total on-chip power of 10.745W as shown in Fig. 7 Thus the proposed PC ALU provides approximately 30% reduction in power consumption as compared to conventional PC ALU. Speed is also improved in case when the match is found in LUT in the earlier search. Tradeoff for proposed PC ALU is that the inclusion of additional overhead will increases the power consumption when the operand frequency is very low. To overcome this, MODE is force to logic zero to bypass the LUT comparison, resulting the user to have control over the operation and have optimal power reduction.

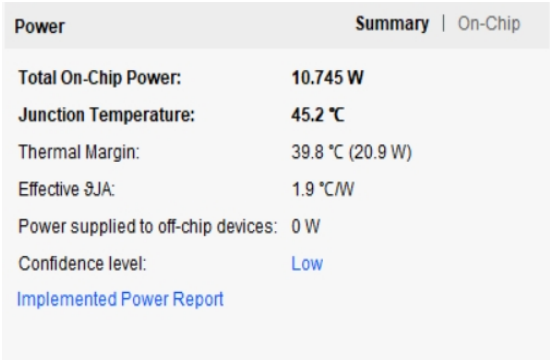

Power	Summary | On-Chip
Total On-Chip Power:	**10.745 W**
Junction Temperature:	**45.2 °C**
Thermal Margin:	39.8 °C (20.9 W)
Effective ϑJA:	1.9 °C/W
Power supplied to off-chip devices:	0 W
Confidence level:	Low
Implemented Power Report	

Fig. 7. Power consumption report of proposed PC-ALU.

IV. Conclusion

In this paper LUT based pre-computational block is used in combination with existing chain based conventional ALU which decreases the power consumption of ALU. The proposed pre computational ALU consumes 10.745W of total on chip power, which is 30% less that conventional ALU. The proposed ALU design trade-off with speed if the operand match is not found in lUT and also trade the area of overhead. Speed can be further improved by using different search algorithm to find the match in LUT and using the asynchronous match found signal, which will be explored in future.

V. Acknowledgment

The authors would like to thank the Indian Space Research Organisation (ISRO), Government of India, for providing financial support under the RESPOND research project.

References

[1] A. D. George, "An overview of risc vs. cisc," in *Proceedings of the Twenty-Second Southeastern Symposium on System Theory*, (Cookeville, TN, USA), pp. 436–438, IEEE, 1990.

[2] T. He, X. Chen, and G. Wang, "Research on open source processor and analysis of current development dilemma based on risc-v," in *2023 8th International Conference on Computer and Communication Systems (ICCCS)*, pp. 768–774, 2023.

[3] J. L. Hennessy and D. A. Patterson, *Computer Architecture: A Quantitative Approach*. San Francisco, CA: Morgan Kaufmann, 6th ed., 2017.

[4] K. Kaur and A. Noor, "Strategies & methodologies for low power vlsi designs: A review," *International Journal of Advances in Engineering & Technology*, vol. 1, pp. 159–165, may 2011.

[5] H. Ji, D. Geng, X. Chuai, X. Duan, Q. Chen, W. Wu, C. Chen, W. Jiang, J. Jiang, and L. Li, "An advanced full adder based arithmetic logic unit (alu) using low-temperature poly-si oxide tfts," *IEEE Transactions on Electron Devices*, vol. 69, no. 11, pp. 6160–6165, 2022.

[6] P. Barla, V. K. Joshi, and S. Bhat, "A novel low power and reduced transistor count magnetic arithmetic logic unit using hybrid stt-mtj/cmos circuit," *IEEE Access*, vol. 8, pp. 6876–6889, 2020.

[7] T. Fuse, Y. Oowaki, T. Yamada, M. Kamoshida, A. Ohta, T. Shino, S. Kawanaka, M. Terauchi, T. Yoshida, G. Matsubara, S. Yoshioka, S. Watanabe, M. Yoshimi, K. Ohuchi, and S. Manabe, "A 0.5 v 200 mhz 1-stage 32 b alu using a body bias controlled soi pass-gate logic," in *1997 IEEE International Solids-State Circuits Conference. Digest of Technical Papers*, pp. 286–287, 1997.

[8] P. Nautiyal, P. Madduri, and S. Negi, "Implementation of an alu using modified carry select adder for low power and area-efficient applications," in *2015 International Conference on Computer and Computational Sciences (ICCCS)*, pp. 22–25, 2015.

[9] "Design and implementation of risc-v processor alu using multiplexers and lut," *International Journal of Novel Research and Development (IJNRD)*, vol. 8, September 2023. https://www.ijnrd.org.

[10] Deepali, I. Saini, and M. Khosla, "Low power 32-bit synchronous and reconfigurable alu design using chain structure," in *2020 11th International Conference on Computing, Communication and Networking Technologies (ICCCNT)*, (Kharagpur, India), pp. 1–7, IEEE, 2020.

[11] J. Kamatam and K. Gajula, "Design of array multiplier using mux based full adder," *International Journal of Engineering Research and*, vol. V6, 05 2017.

[12] K. Yi and Y.-H. Ding, "32 bit multiplication and division alu design based on risc structure," in *2009 International Joint Conference on Artificial Intelligence*, (Hainan, China), pp. 761–764, IEEE, 2009.

Authorized licensed use limited to: UNIVERSIDADE FEDERAL DE SANTA MARIA. Downloaded on March 29,2026 at 19:23:25 UTC from IEEE Xplore. Restrictions apply.