# HxGN OnCall® Dispatch

## Installation and Configuration Guide

Release date: August 2024
Release version: 10.0.2309.4
Release type: On-premises and cloud
Released by: Hexagon Global Technology Center
Release method: Hexagon Global Software Delivery Process

## Copyright

© 2018-2024 Hexagon AB and/or its subsidiaries and affiliates. All rights reserved.

Warning: The product made the subject of this documentation, including the computer program, icons, graphical symbols, file formats, audio-visual displays and documentation (including this documentation) (collectively, the “Subject Product”) may be used only as permitted under the applicable software license agreement, and subject to all limitations and terms applicable to use of the Subject Product therein. The Subject Product contains confidential and proprietary information of Intergraph Corporation, a member of the Hexagon Group of companies (“Hexagon”), its affiliates, and/or third parties. As such, the Subject Product is protected by patent, trademark, copyright and/or trade secret law and may not be transferred, assigned, provided, or otherwise made available to any third party in violation of applicable terms and conditions cited further below.

## Terms of Use

By installing, copying, downloading, accessing, viewing, or otherwise using the Subject Product, you agree to be bound by the terms of the EULA found *here* (*https://legaldocs.hexagon.com/sig/Licenses/EULA_SA_SIG-Eng_062023.pdf*).

## Disclaimers

Hexagon and its suppliers believe the information in this publication is accurate as of its publication date. Hexagon is not responsible for any error that may appear in this document. The information and the software discussed in this document are subject to change without notice.

Language Translation Disclaimer: The official version of the documentation is in English. Any translation of this document into a language other than English is not an official version and has been provided for convenience only. Some portions of a translation may have been created using machine translation. Any translation is provided "as is.” Any discrepancies or differences occurring in a translation versus the official English version are not binding and have no legal effect for compliance or enforcement purposes. Hexagon disclaims any and all warranties, whether express or implied, as to the accuracy of any translation.

Reasonable efforts have been made to provide an accurate translation; however, no translation, whether automated or provided by human translators is perfect. If any questions arise related to the accuracy of the information contained in a translated version of documentation, please refer to its official English version. Additionally, some text, graphics, PDF documents, and/or other accompanying material may not have been translated.

## Links to Third-Party Websites

This document may provide links to third-party websites for your convenience and information. Third-party websites will be governed by their own terms and conditions. Hexagon does not endorse companies or products to which it links.

Third-party websites are owned and operated by independent parties over which Hexagon has no control. Hexagon shall not have any liability resulting from your use of the third-party website. Any link you make to or from the third-party website will be at your own risk and any information you share with the third-party website will be subject to the terms of the third-party website, including those relating to confidentiality, data privacy, and security.

Hexagon provides access to Hexagon international data and, therefore, may contain references or cross references to Hexagon products, programs and services that are not announced in your country. These references do not imply that Hexagon intends to announce such products, programs or services in your country.

## Trademarks

"Hexagon,” “Hexagon Safety, Infrastructure & Geospatial,” “Intergraph,” the Hexagon logo, and the Intergraph logo are registered trademarks of Hexagon AB or its subsidiaries.

Other brands and product names are trademarks of their respective owners.

## Revisions

Hexagon reserves the right to revise these terms at any time. You are responsible for regularly reviewing these terms. Your continued use of this document after the effective date of such changes constitutes your acceptance of and agreement to such changes.

## Contact Us

*Contact us https://hexagon.com/company/contact-us* with any questions regarding these terms.

# Contents

**Overview** ..... **7**

What's New ..... 7
Document Set ..... 10

**System Architecture Overview** ..... **12**

Cloud Configuration ..... 13

**HxGN OnCall Dispatch Physical System Overview** ..... **14**

**Overview of the Installation and Configuration Process** ..... **15**

**Install Hexagon Administration Tools** ..... **16**

**Install RabbitMQ** ..... **17**

**Create the Oracle or SQL Server Database** ..... **18**

**Set Up Licensing** ..... **18**

**Set Up Your CAD and High Availability Database Configurations** ..... **19**

**Create Database Objects** ..... **22**

**Install ISM and Backend Services** ..... **23**

**Install HxGN OnCall Dispatch Web Applications** ..... **23**

**Configure Windows Authentication** ..... **24**

Configure HTTPS for the HxGN OnCall Dispatch Windows Authentication Server ..... 25
Configure Token Signing for the HxGN OnCall Dispatch Windows Authentication Server ..... 26
Configure OIDC for the HxGN OnCall Dispatch Windows Authentication Server ..... 28
Custom Callback Path for IWAServer External OIDC Configuration ..... 30

**Set Up Web Applications** ..... **30**

Network Protocol ..... 30
Response Compression ..... 30

HTTPS Configuration ... 31
Other HTTPS Methods ... 32
Use a PFX Certificate File ... 32
Use A PEM/CRT File ... 33
Token Signing Certificate ... 33
Changing Log Level for OnCall.RealTime.WebApi ... 34
Changing Log Level for OnCall.Identity ... 34

**Set Up Backend Services in ISM ... 35**

Set Up Peering in ISM ... 35
Set Up ISM Configuration Files ... 35

**Configure OnCall Dispatch using OcUtil ... 36**

Load the Parameter Data with OcUtil ... 37
Load the Command Line Data with OcUtil ... 37
Loading Localized Strings with OcUtil ... 37
Setting Up the Message Bus Configuration using OcUtil ... 38
Set the License Type using OcUtil ... 40
Seed the Group and Role Tables using OcUtil ... 40
Add the Default NextNumber Entries ... 41

**Using Configuration Files to Load Database Files ... 42**

**Configure Load Balancer Health Check Endpoints ... 43**

**Reserve Ports for HxGN OnCall Dispatch Services ... 43**

**Configure the Firewalls ... 47**

**Start the OnCall Dispatch Services ... 47**

**Install Feature Flags ... 48**

**Verify that the HxGN OnCall Dispatch Website is Working ... 48**

**Run Administrator to Continue Setting Up Your HxGN OnCall Dispatch System ... 49**

**Appendix ... 50**

Use Chocolatey, NuGet, and Scripts to Install and Uninstall Hexagon Software ... 50
Uninstall Hexagon Software ... 52
Using the Batch Files ... 52

Using Chocolatey Commands ..... 52
Overview of OnCall Dispatch Groups and Roles ..... 53
OcUtil seedUsers performs the following actions: ..... 53
HA Database Configuration ..... 55
HA Database Configuration Options ..... 55
CAD HA Database Configuration Name ..... 58
Configure Firewalls ..... 59
BaseApp Command Line Options ..... 64

**Technical Support ..... 66**

Submit a Case Online ..... 66

# Overview

The HxGN OnCall® Dispatch application from Hexagon's Safety, Infrastructure & Geospatial division is a fully cloud-deployable web client that offers an interactive user interface to streamline workflows between the map, event information, unit data, and dashboard capabilities.

OnCall Dispatch provides core call-taking and dispatching capabilities using browsers and features a highly productive, easy-to-use interface and workflows that are simple to deploy and maintain across multiple sites.

OnCall Dispatch extends dispatching capabilities to remote, supervisory, and occasional-use roles to deliver wider incident management support. Its ease of use, scope of capabilities, and wider choice of hardware options enable OnCall Dispatch to support use cases outside of the primary call-taking and dispatching conducted at the public safety answering point (PSAP). Applications include mobile dispatch, management roles, and call-taking and dispatching at remote facilities such as police and fire stations.

# What's New

To read about new features, updated features, and system requirements, use the **Support** page. For online and phone support, see *Technical Support* (on page 66).

1. Go to the *Support page* *https://hexagon.com/support-success/safety-infrastructure-geospatial*.
2. Click **Log in**.
3. Type your username and password, and click **Log in**.

4. From the **Products** list, select your product portfolio.

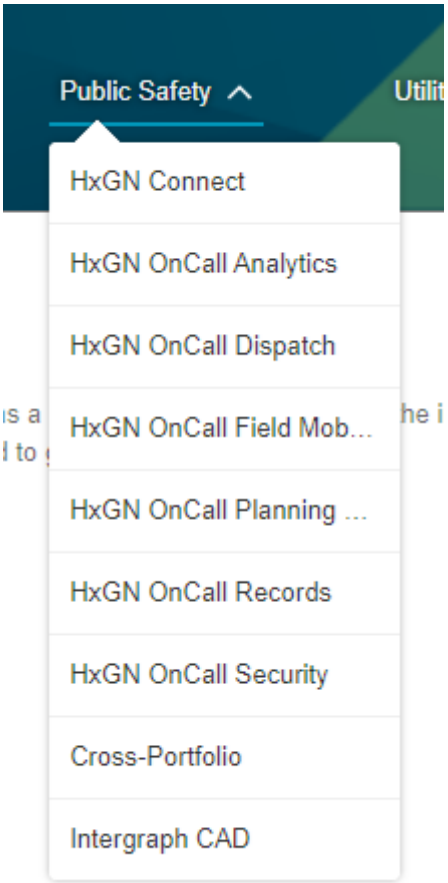


The list of products for the selected portfolio displays.

5. Click a product link to open its support page.

6. When the product page opens, click the appropriate links to view product announcements or technical documentation.
   - Click **Release Notes** to review new or enhanced product features.
   - Click **Issues Resolved** to review defects that have been fixed.
   - Click **Supported Environments** to review system requirements.

- Click **Open-Source Software Notices** in the **Product Information** box, if available, to review information on open-source software in the product.

Some minor releases might not provide Release Notes or Issues Resolved.

# Document Set

The following documents are provided with the product.

| Document | Description |
|---|---|
| *HxGN OnCall Dispatch Supported Environments* | An Excel file that lists the supported software configurations (required and optional) for the product. |
| *HxGN OnCall Dispatch Release Notes* | A PDF file that lists the enhancements for the current release. |
| *HxGN OnCall Dispatch Issues Resolved* | A PDF file that lists the product defects that have been fixed for the current release.<br>This document is not provided for the first release of a new product. |
| *HxGN OnCall Dispatch Open-Source Software Notices* | A PDF file that lists open-source software and licenses included with the product. |
| *HxGN OnCall Dispatch Installation and Configuration Guide* | A PDF file that contains instructions for installing the product. |
| *HxGN OnCall Dispatch Help* | HTML files that contain information about the OnCall Dispatch application included with a product suite that provides a user interface to configure and customize HxGN products. |
| *HxGN OnCall Dispatch \| Administrator Help* | HTML files that contain information about the HxGN OnCall® Dispatch \| Administrator application included with a product suite that provides a user interface to configure and customize HxGN products. |

The documents install with the product or are available on the delivery media.

The current versions of the Supported Environments, Release Notes, Issues Resolved, and Open-Source Software Notices are available on the Hexagon *Support https://hexagon.com/support-success/safety-infrastructure-geospatial* website.

# System Architecture Overview

The HxGN OnCall® Dispatch system provides real-time emergency management capabilities. In dispatch centers, HxGN OnCall Dispatch provides call taking, dispatching, dashboards, and administrative workflows. In emergency response vehicles, HxGN OnCall Dispatch | Mobile Unit and HxGN OnCall Dispatch | Mobile Responder provide support for mobile workflows.

OnCall Dispatch communicates with components running on servers.

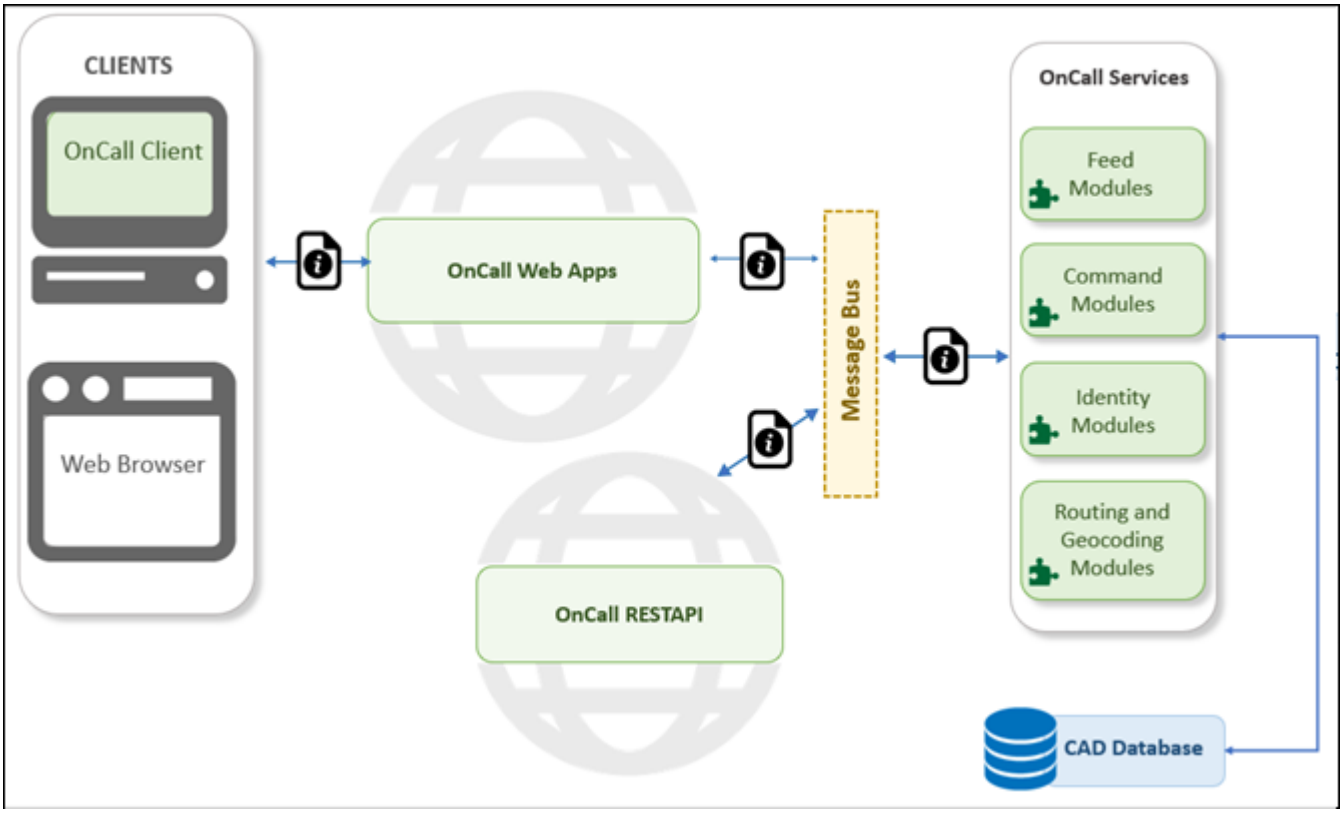


The clients communicate with the HxGN OnCall Dispatch web applications. The web applications include the Website, Proxy, IdentityServer, WebApi, and RealTimeWebApi, all running in Interface Service Manager (ISM) as services. Mobile Responder communicates with the OnCall Dispatch running in ISM. For high availability of the HxGN OnCall Dispatch web applications, you need multiple web servers with a network load balancer.

The web applications communicate over the RabbitMQ message bus with the HxGN OnCall Dispatch backend services running in ISM. Many of the backend services run as

different modules loaded into a process called *BaseApp.exe*. Each BaseApp can run multiple modules, or you can run the same module in multiple BaseApps. You can run BaseApp on either the same system or, for load balancing and high availability, on multiple systems. A HxGN OnCall Dispatch system includes required backend services, such as Change Publisher and LogonModule. The system may also include interface services such as HxGN OnCall Dispatch | Tracker, and RestAPI. The server applications rely on shared infrastructure that includes the RabbitMQ message bus, third-party geocoding and routing providers, and the HxGN OnCall Dispatch database.

Session affinity and WebSocket communication are required and must be enabled for your load balancer. Also, you should enable HSTS and force HTTPS so the application does not transition after the client connects to it. Hexagon recommends setting the **Max Age** of the HSTS website to 2 years (`63072000`) and checking **IncludeSubDomains** on the **Edit Website HSTS** dialog box. If the options are available for your load balancer, check **Redirect Http to Https**. Last, set up a URL rewrite with a canonical name redirect. This guarantees the application can authenticate tokens based on the correct issuer.

- HTTPS is required, and HTTP/1.1 and HTTP/2 support may need to be enabled, based on load balancer. See your vendor documentation for more information on configuring your load balancer.
- For high availability of the message bus, set up RabbitMQ in a cluster on three servers.
- ISM has runtime dependencies on RabbitMQ and the HxGN OnCall Dispatch database.
- See the "*BaseApp Command Line Options* (on page 64)" topic for more information on *BaseApp.exe*.

# Cloud Configuration

HxGN OnCall Dispatch can be configured to run on-premise, or in the cloud. The instructions and information in this document in general describe an on-premise configuration. To configure HxGN OnCall Dispatch to run in the cloud, however, see the following topics in particular:

- *Install RabbitMQ* (on page 17)

  Cloud customers may need RabbitMQ on-premise to run certain interface products, such as Xalt Interface and Informer.

- *Run Administrator to Continue Setting Up Your HxGN OnCall Dispatch System* (on page 49)

# HxGN OnCall Dispatch Physical System Overview

For a HxGN OnCall Dispatch production environment, Hexagon's Safety, Infrastructure & Geospatial division recommends you have the following:

- Two database servers
- Two Windows servers for internal-facing Hexagon applications
- Two Windows servers for external-facing Hexagon applications
- Three servers for RabbitMQ
- A network load balancer

You may also have an archive database maintained by HxGN OnCall® Dispatch | Backup. The Hexagon system administration tools can be loaded on an application server or on an administrator workstation. Customer requirements may dictate a different system architecture.

Hexagon recommends using OnCall Dispatch with a screen resolution of 1920 x 1080.

# Overview of the Installation and Configuration Process

- To upgrade from CAD version 09.04.00 to 10.0.2309.4, see the "CAD 09.04.00 to HxGN OnCall Dispatch Upgrade" topic in the HxGN OnCall Dispatch *Upgrade Guide*.
- To upgrade your existing system to a new version, see the "Upgrade Your HxGN OnCall Dispatch System" topic in the *HxGN OnCall Dispatch Upgrade Guide*.
- You can install OnCall Dispatch at non-default location by creating a junction. To do so, open a PowerShell window as administrator. Run `Start-Process -FilePath "$env:comspec" -ArgumentList "/k", "mklink", "/J", "`"$(Join-Path $env:ProgramFiles "Intergraph")`"","`"<$destination>".` command before the OnCall Dispatch installation. Replace <`$destination`> with the destination folder path you want to use.

Users must have a certificate signed by a trusted certificate authority before HxGN OnCall Dispatch installation and configuration.

To create an HxGN OnCall Dispatch system, perform the following tasks in this order:

1. *Install the Hexagon Administration tools* (see "*Install Hexagon Administration Tools*" on page 16) on a server or an administrator workstation.
2. Install *RabbitMQ* (see "*Install RabbitMQ*" on page 17).
3. Set up your *database servers* (see "*Create the Oracle or SQL Server Database*" on page 18): Oracle or SQL Server.
4. *Set up licensing* (on page 18).
5. *Set up your CAD and High Availability database configurations* (on page 19).

   Oracle customers must set up Oracle logins.
6. *Create database objects* (on page 22).
7. *Install ISM and backend services.* (see "*Install ISM and Backend Services*" on page 23)
8. *Install* (see "*Install HxGN OnCall Dispatch Web Applications*" on page 23) and *set up* (see "*Set Up Web Applications*" on page 30) web applications.

9. *Configure OnCall Dispatch using OcUtil* (on page 36).
10. Configure the firewalls.
11. *Start the OnCall Dispatch services.* (see "*Start the OnCall Dispatch Services*" on page 47)
12. *Run Administrator to continue setting up your HxGN OnCall Dispatch system* (on page 49).

# Install Hexagon Administration Tools

Hexagon delivers several system administration tools. Some of the tools are used during the initial system set up, such as CAD Query Tool, CAD Database Utility, CAD Bulk Loader, and OcUtil. ISM Administrator is used during system set up and for routine system maintenance.

- HxGN OnCall Dispatch | Administrator is also used to administer your HxGN OnCall Dispatch system, but it is set up later in this guide.
- You can install OnCall Dispatch at non-default location by creating a junction. To do so, open a PowerShell window as administrator. Run `Start-Process -FilePath "$env:comspec" -ArgumentList "/k", "mklink", "/J", "`"$(Join-Path $env:ProgramFiles "Intergraph")`"","`"<$destination>".` command before the OnCall Dispatch installation. Replace <`$destination`> with the destination folder path you want to use.

***To install the administration tools:***

1. Open PowerShell using the **Run as administrator** option.
2. From the PowerShell window, define the **OnCallDeliveryRoot** environment variable.

   The **OnCallDeliveryRoot** variable is wherever your delivery media is installed, for example, `$env:OnCallDeliveryRoot = "C:\delivery\IPS1122 - HxGN OnCall Dispatch - Advantage\Advantage"`.
3. Install all **Admin Tools**. using the following PowerShell command:

   ```
   & "$env:OnCallDeliveryRoot\UpgradeOnCallPackages.ps1" -AdminTools
   ```

This also installs the **Admin Tools** user guides (PDFs).

# Install RabbitMQ

See the *RabbitMQ Installation and Configuration Guide* for information on installing RabbitMQ. This document can be found in the *\Third_Party* folder.

When you run the *ConfigureRabbitMQ.ps1* script for the first time, you are prompted to accept that you trust Hexagon as a publisher. Select `Always run` when prompted.

# Create the Oracle or SQL Server Database

If you are using Oracle, see the *Oracle 19c Server Installation and Configuration Guide* to set up your database server. These documents can be found in the *\Third_Party* folder.

If you are using Microsoft SQL Server, see the *SQL Server Installation and Configuration Guide*. This document can also be found in the *\Third_Party* folder.

You can choose to set up the database for high availability now or later. See the appropriate guides on how to set up Oracle Data Guard or SQL Server Always On Availability Groups. These documents can be found in the *\Third_Party* folder.

# Set Up Licensing

The Hexagon software requires you to set up licensing. More information on Hexagon licensing can be found at *https://support.hexagonsafetyinfrastructure.com/infocenter/index?page=licensing_resources*.

***To set up licensing for your HxGN OnCall Dispatch system:***

1. Set up a license server to serve licenses for your Hexagon applications.
2. Configure your Hexagon application server to use your license servers.
   a. Install **Intergraph Licensing**.
   b. Run **Intergraph License Manager** using the **Run as administrator** option.
   c. Select **Add Concurrent License Source** from the **Client** menu.
   d. Specify your license server connection information.

You do not need to install Hexagon license software on every computer. After setting up a computer to connect to your license servers, you can copy the CLCR_LICENSE_PATH text file to your other application servers. The CLCR_LICENSE_PATH file is located in the *C:\ProgramData\Intergraph\Licensing* folder.

For information on how to set the license type, see the "*Set the License Type using OcUtil* (on page 40)" topic.

# Set Up Your CAD and High Availability Database Configurations

A CAD configuration defines an "OnCall" parameter override, HxGN OnCall Dispatch configuration keys, and which High Availability (HA) database configuration is being used. You can have multiple CAD configurations defined, but only one can be the default configuration. Most Hexagon applications connect to the database specified in the default configuration.

An HA database configuration represents a connection to a single database, or to a set of databases, using one of the following configurations:

- SQL Database Mirroring
- SQL Server Always On
- Oracle Data Guard configuration

You can define multiple HA database configurations, such as configurations for test and database configurations for production.

Your configuration and HA database configuration values are stored in the *cad-global.json.config* file. By default, this file is located at *C:\ProgramData\Intergraph\CAD*.

*..\Program Data* is a hidden folder. To access this folder, click the **View** tab in File Explorer, and check the **Hidden items** option to see this folder.

The CAD Query Tool helps to manage your CAD and HA database configurations. CAD Query Tool does not support viewing or modifying the MESSAGE_BUS keys in your CAD configuration; these entries are set up later using OcUtil.

The default *cad-global.json.config* file contains a CAD configuration called Standard. There are two HA database configurations in this file: a SQL Server configuration called Standard_MSS and an Oracle configuration called Standard_ORA. The CAD configuration points to Standard_MSS by default. You can update these delivered configurations, or you can create your own CAD configuration and HA database configuration.

***To set up your HA database and CAD configurations:***

1. Run CAD Query Tool as administrator. You must run CAD Query Tool as administrator in order to save changes to the *cad-global.json.config* file.
2. Click **Cancel** on the **Connect to Database** dialog box.

3. Select **Database > Manage HA Database Configurations** from the menu. You can either update the Standard CAD configuration or create your own.
   a. To modify an HA database configuration, click **Modify** at the bottom of this dialog box. Change the connection information as appropriate for your database. Click **OK**.
   b. To create a new HA database configuration, click **Add** at the bottom of this dialog box. Specify a name and the appropriate database connection information. Click **OK**.
4. After you are done modifying or creating your HA database configuration, test the connection:
   a. Clicking **Test Connection** on the **Connect to Database** dialog box.
   b. Click **OK** on the **Connect to Database** dialog box.
   c. If the configuration works, a message box confirming a successful connection is displayed. Click **OK** to close the message box.
5. Select **Database > Manage CAD Configurations** from the menu. You can either update the standard CAD configuration or create your own.
   a. To modify the existing CAD configuration, click **Modify** at the bottom of this dialog box. Update the fields as appropriate for your database.
      - For the **Override String** field, `OnCall` is the default override, which matches the default value of the SiteOverride parameter (OnCall set, CoreConfiguration list). You may want to add other override configurations.
      - The **OnCall Base URL** field should be the URL used to access OnCall Dispatch from client computers.

      When finished, click **OK**.
   b. To create a new CAD configuration, click **Add** at the bottom of this dialog box.
      - Specify a name and an existing HA database configuration for the **HA Database Configuration** field.
      - For the **Override String** field, `OnCall` is the default override, which matches the default value of the SiteOverride parameter (OnCall set, CoreConfiguration list). You may want to add other override configurations.
      - The **OnCall Base URL** field should be the URL used to access OnCall Dispatch from client computers.

- For the other fields, enter temporary placeholders for now. These can be configured later in this document.

c. When finished, click **OK**.

6. Finally, select the configuration from the table you just created/modified and click **Make Default**.

You have now set up your HA database and CAD configurations.

# Create Database Objects

The CAD Database Utility can be used to set up CAD database objects, including tables, indexes, and constraints.

***To create database objects:***

1. Run the CAD Database Utility application.
2. Select **File >** *db_schema_both.xml* file.
3. Select **File > Execute File**.
4. Click **Yes** to indicate that you want to create objects.
5. Log in to your database.
6. Answer the prompts once you have logged in.
7. Once the utility is finished, press ENTER to continue. Click **OK**.

You have now created your database objects.

# Install ISM and Backend Services

The script you run to install the HxGN OnCall Dispatch backend services handles installing prerequisites such as the .NET Framework.

Hexagon recommends running the OnCall Dispatch services under the ISM service. You need ISM on the application server(s) where you plan to run services such as OnCall Dispatch Core Services, FeatureFlag service, RestAPI, and so forth. After installing the backend services, you must configure them to run under ISM.

For more information on installing and configuring ISM and ISM services, such as running ISM under a different account that the default Local System Account, see the *Interface Service Manager Installation and Configuration Guide*.

***To install ISM and the backend services:***

1. Open PowerShell using the **Run as administrator** option.
2. From the PowerShell window, define the **OnCallDeliveryRoot** environment variable.

   The **OnCallDeliveryRoot** variable is wherever your delivery media is installed, for example, `$env:OnCallDeliveryRoot = "C:\delivery\IPS1122 - HxGN OnCall Dispatch - Advantage\Advantage"`.
3. Install the backend services by running the following PowerShell command:

   ```
   & "$env:OnCallDeliveryRoot\UpgradeOnCallPackages.ps1" -Services
   ```

   This script installs ISM and the backend services, which includes Change Publisher Service, LOI Service, and HxGN OnCall Dispatch Core Services, such as Event Commands Module. This script does *not* install optional services such as Informer or testing tools such as AniAli Test Tool.
4. Reboot your system after installing the .NET Framework.

# Install HxGN OnCall Dispatch Web Applications

The script you run to install the HxGN OnCall Dispatch web applications handles installing prerequisites such as the .NET Framework.

***To install the HxGN OnCall Dispatch web applications:***

1. Open PowerShell using the **Run as administrator** option.
2. From the PowerShell window, define the **OnCallDeliveryRoot** environment variable.

   The **OnCallDeliveryRoot** variable is wherever your delivery media is installed, for example, `$env:OnCallDeliveryRoot = "C:\delivery\IPS1122 - HxGN OnCall Dispatch - Advantage\Advantage"`.

3. Install the web applications by running the following PowerShell command:

   ```
   & "$env:OnCallDeliveryRoot\UpgradeOnCallPackages.ps1" -WebApps
   ```

   This installs the OnCall Dispatch Website, Proxy, IdentityServer, WebApi, RealTimeWebApi, and ISM. Each web application runs under ISM.

   The following table shows the web applications and their default installation folder.

| Web Application | Default Installation Folder |
|---|---|
| **Identity** | *C:\Program Files\Intergraph\OnCall.Identity* |
| **Proxy** | *C:\Program Files\Intergraph\OnCall.Proxy* |
| **RealTimeWebApi** | *C:\Program Files\Intergraph\OnCall.RealTime.WebApi* |
| **WebApi** | *C:\Program Files\Intergraph\OnCall.WebApi* |
| **Website** | *C:\Program Files\Intergraph\OnCall.Website* |

4. Reboot your system after installing the .NET Framework.

# Configure Windows Authentication

The following steps are optional and only required for sites using Windows Authentication.

OnCall.Identity uses OnCall.IWAServer as an External OIDC provider that is hosted in IIS to provide Windows Authentication. To install OnCall.IWAServer, open a command prompt as Administrator and run the delivered *install_oncall.iwaserver.bat* file.

IWAServer enables Windows Authentication support for OnCall Dispatch by providing a separate service running under IIS that supports authentication via NTLM. The connection to IWAServer needs to be behind a different URL than the main OnCall URL. For example, if your system runs at https://oncall.yourdomain.com/oncall, then IWAServer needs to be set up at a different URL such as https://oncall-auth.yourdomain.com/OnCall.iwaserver.

- To understand why IWAServer needs to be behind a different URL, it is important to understand some of the limitations of the NTLM/Kerberos protocol with respect to HTTP. NTLM only works over HTTP1.1, meaning the communication from the client to IWAServer only occurs over HTTP 1.1 and not over HTTP/2. If both IWAServer and OnCall proper are behind the same domain from the browser's perspective, then the browser thinks it must always perform the NTLM negotiation and must always talk to HTTP 1.1. This is an issue because running OnCall proper over HTTP 1.1 is known to cause performance issues.
- Although the URL coming into the load balancer is different, this does not mean that you need separate servers on the back-end. IWAServer runs under IIS, which serves up content on port 443 and not Port 44343 like OnCall.Proxy. The URLs can redirect to different ports on the same set of computers.

# Configure HTTPS for the HxGN OnCall Dispatch Windows Authentication Server

1. From **Computer Management**, navigate to **Services and Applications** and select **Internet Information Services (IIS) Manager**.
2. Expand the name of your server.
3. Check that Windows Authentication is enabled.

   If it is disabled, select the name of your server. Then, double-click on the **Authentication** icon in the main window to enable Windows Authentication.
4. Select **Application Pools**.
5. Verify that OnCall.iwaserver has started.
6. Hexagon requires that you configure your website bindings to use secure access using HTTPS. Use IIS Manager to add a binding for the HTTPS type and port 443 using your site SSL certificate.
7. Ensure the certificate is installed into the following certificate (local computer) stores:

- Personal Certificates
- Trusted Root Certificates

Hexagon does not provide this certificate. The certificate used to support HTTPS may be used, but it must contain the private key and the public key in an RSA format.

If it is not installed, use the following directions:

a. Install the certificate using the Certificate Import Wizard and use your local computer as the default location.

b. Using IIS Manager, add an HTTPS binding using the newly installed certificate.

c. Add the SSL Redirection Rule by enabling HSTS and forwarding HTTP to HTTPS by navigating to **Actions > Configure** from the menu.

d. Restart IIS.

8. Grant permission your site SSL certificate:

   a. The IIS AppPool\OnCall.iwaserver user must have permission to read the site SSL certificate. To give permission to the private key, run the **Microsoft Management Console** (mmc), then use the **Certificates snap-in**. Select **Computer Account** to manage the appropriate certificate store. This is a default program available with Windows.

   b. Right-click on the appropriate certificate and select **All Tasks > Manage Private Keys** from the context menu.

   c. Add the IIS AppPool\OnCall.iwaserver user to the security group and give the user Read access.

   d. Add the <Local Computer>\IIS_IUSRS user to the security group and give the user Read access.

## Configure Token Signing for the HxGN OnCall Dispatch Windows Authentication Server

The certificate used for the OnCall.IWAServer must be the same certificate used for OnCall.Identity. If the default certificate is changed following the instructions given in the "HTTPS Configuration" topic, you must modify the appsettings.json file for OnCall.IWAServer, as well.

***To grant application permission to your token signing certificate:***

1. The IIS AppPool\OnCall.iwaserver user must have permission to read the private key. To give permission to the private key, run the **Microsoft Management Console** (mmc) then use the **Certificates snap-in**. Select **Computer Account** to manage the appropriate certificate store. This is a default program available with Windows.
2. Right-click on the appropriate certificate and select **All Tasks > Manage Private Keys** from the context menu.
3. Add the IIS AppPool\OnCall.iwaserver user to the security group and give this user Read access.
4. Add the <Local Computer>\IIS_IUSRS user to the security group and give the user Read access.
5. If the default certificate was changed, edit appsettings.json parameters for tokens to point to this certificate using the following directions:
   a. Navigate to \inetpub\wwwroot\OnCall.iwaserver.
   b. Using a text editor, open the appsettings.json file and locate the Tokens section:

```
"Tokens": {
        "CertificateSubject": "OnCall.Identity",
        "CertificateStoreLocation": "LocalMachine",
        "CertificateStoreName": "My",
        "CertificateValidOnly": "false"
    }
```

   c. Enter parameter values that match your certificate.
      i. `CertificateSubject`– The subject of the certificate to use. This value can be found in the properties of a certificate by using Certificate Manager.
      ii. `CertificateStoreName`:

         `root`- the Trusted Root Certificates folder.

         `my`- your personal certificates folder.

      iii. `CertificateStoreLocation`:

`LocalMachine`- the system certificate store.

`CurrentUser`- the certificate store of the user.

iv. `CertificateValidOnly`- Hexagon recommends setting this value to **True** for production environments. If set to **False**, invalid certificates are allowed. This value would typically be used when testing self-signed certificates.

d. Ensure the certificate is installed into the following certificate (local computer) stores:

- Personal Certificates
- Trusted Root Certificates

Hexagon does not provide this certificate. The certificate used to support HTTPS may be used, but it must contain the private key and the public key in an RSA format. If it is not installed, install the certificate using the Certificate Import Wizard and use your local computer as the default location.

# Configure OIDC for the HxGN OnCall Dispatch Windows Authentication Server

1. Login to OnCall Dispatch using OnCall/Superuser account to add Windows domain users. These are on-prem Windows Active Directory accounts (e.g., jqpulic).
2. Create an initial account using the **User & Group Management** page for an administrator to be able to Single-Sign-On (SSO) after SSO is enabled.
3. Fill out the **Username** and **Domain** fields using the Windows domain account information:

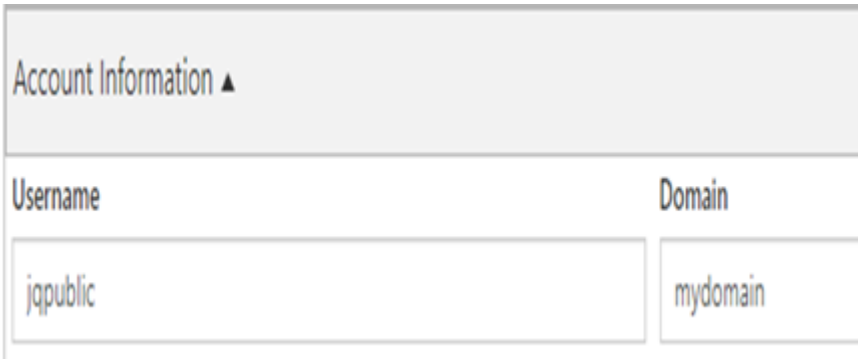


4. Set the user's **Default Group** to **Default Super Group**.
5. Create an **External OIDC Configuration**.

***To create an External OIDC Configuration:***

1. From the *HxGN OnCall Dispatch* | *Administrator* menu, navigate to **Administration > OIDC**.
2. Under the **Select Authentication Configuration** section, use the drop-down list to select **External OIDC Configuration**.
3. Click **Add New External OIDC Configuration**.
4. Enter the following information:
   - **Name**- IISWinAuth
   - **Client Id**- IISAuth
   - **UserName Claim**- preferred_username
   - **Authentication Server**- https://{server path}/OnCall.iwaserver

     The server path needs to be the domain path. For example, https://myserver.mydomain.com/OnCall.iwaserver.
   - **Client Secret**- leave blank. It is generated when you save the entry.
   - **Callback Path-** URL suffix, e.g., https://example.com/auth

     If you use a **Callback Path** different from the default value, `signin-oidc`, you must modify the *appsettings.json* file for OnCall.IWAServer. See the following section for more information on how to modify.
5. Click **Save**.

   Once you have clicked **Save,** this sets OnCall to use Single-Sign-On.
6. To ensure that OnCall Dispatch functions correctly with SSO enabled and to clear previously cached configurations, restart ISM Services.

   If you are unable to login using Single-Sign-On (SSO), see the following troubleshooting methods:
   - From an Administrator command prompt, run OCUtil with the `OidcConfigReset` command line option to reset OIDC configurations.
   - Restart services and clear your browser cache, if required.

### Custom Callback Path for IWAServer External OIDC Configuration

If the default **Callback Path** was changed in the steps above, you must edit the *appsettings.json* parameters to set your custom Callback Path suffix.

1. Navigate to *\inetpub\wwwroot\OnCall.iwaserver*.
2. Using a text editor, open the *appsettings.json* file and locate the following OpenIdConnect section:

```
"OpenIdConnect": {
  "CallbackPath": "signin-oidc"
}
```

3. Replace "`signin-oidc`" with the value specified when creating the External OIDC Configuration.

# Set Up Web Applications

## Network Protocol

Network administrators should disable insecure network protocols used in network communication between applications to ensure secure communication. For example, TLS 1.0 and 1.1 should be disabled by administrators as they are no longer considered secure. This operating system-level configuration ensures secure communication between applications.

## Response Compression

The HxGN OnCall Dispatch Website compresses static JavaScript and CSS files. In general, file compression can help reduce network traffic and improve performance. However, if you need to disable compression, set the **UseCompression** setting to **false** (`UseCompression=false`) in the corresponding service's command line in ISM.

Dynamic responses from OnCall.WebApi are compressed by default. You can disable response compression using the **UseCompression** setting (`UseCompression=false`) in that service's command line.

# HTTPS Configuration

The following applications require using HTTPS for secure access:

- Proxy
- Identity
- RestfulCad (RestAPI)
- CadNotificationService
- CopyEnvironmentModule
- Deccan API
- OnCall OcUtilServiceModule
- OnCall.UnitEventModule

These applications can be configured using the global *appsettings.json* file and Certificate Manager or by modifying their individual JSON files. The global *appsettings.json* file is included in the cadglobalconfig chocolatey package (version 0.0.3 or later), which is installed alongside the CAD Database Utility. The file must be placed in the *C:\ProgramData\Intergraph\Cad* folder on any server running the applications listed above.

***To configure HTTPS globally for the HxGN OnCall Dispatch applications:***

1. Verify your certificate is located in the Trusted Root Certificates folder.
2. Navigate to */ProgramData/Intergraph/Cad*.
3. Using a text editor, open the *appsettings.json* file and locate the `Kestrel` section:

```
"Kestrel": {
   "Certificates": {
      "Default": {
     "Subject": "*.ingrnet.com",
     "Store": "root",
     "Location": "LocalMachine",
     "AllowInvalid": false
     }
   }
```

```
}
```

4. Enter parameter values that match your certificate.
   - **Subject** – The subject of the certificate to use. This value can be found in the properties of a certificate by using Certificate Manager.
   - **Store**
     - `root` - the Trusted Root Certificates folder.
     - `my` - your personal certificates folder.
   - **Location**
     - `LocalMachine` - the system certificate store
     - `CurrentUser` - the certificate store of the user
   - **AllowInvalid** - Hexagon recommends setting this value to false for production environments. If set to true, invalid certificates are allowed; this value would typically be used when testing self-signed certificates.
5. Ensure the certificate is installed in your local trust store. Hexagon does not provide this certificate. The certificate used to support HTTPS may be used, but it must contain the private key and the public key in an RSA format. If it is not installed, install the certificate using the Certificate Import Wizard and use your local computer as the default location.

# Other HTTPS Methods

If Certificate Manager cannot be used, the following alternate methods are supported:

## Use a PFX Certificate File

1. In the installation folder for OnCall Dispatch, locate the *appsettings.json* file.
2. Open the JSON file with an editor, and locate the Kestrel section.
3. Replace the default Kestrel section with the following information:

```
"Kestrel": {
    "Certificates": {
      "Default": {
        "Path": "C:\\certificates\certificate.pfx",
        "Password": "<password>"
```

```
            }
        }
    }
```

4. Enter parameter values that match your certificate.
   - **Path** – the path to the PFX file
   - **Password** – the password to use the PFXfile

## Use A PEM/CRT File

1. In the installation folder for OnCall Dispatch, locate the *appsettings.json* file.
2. Open the JSON file with an editor, and locate the Kestrel section.
3. Replace the default Kestrel section with the following information:

```
"Kestrel": {
    "Certificates": {
      "Default": {
          "Path": "<path to .pem/.crt file>",
          "KeyPath": "<path to .key file>",
          "Password": "$CREDENTIAL_PLACEHOLDER$"
      }
    }
  }
```

Enter parameter values that match your certificate.

- **Path** – the path to the PEM/CRT file
- **Keypath** – the path to the related KEY file

**Password** – the password that was used to encrypt the KEY and CRT files

# Token Signing Certificate

***To set up a certificate for token signing:***

1. Replace the default certificate used for signing tokens as part of the authentication process.

The certificate used to support HTTPS may be used. However, the certificate must contain both the private key and the public key in an RSA format if you want to use this certificate.

a. The ISM user must have permission to read the private key. To give permission to the private key, run the **Manage Computer Certificates** tool. This is a default program available with Windows.

b. Right-click on the certificate located below the *\Personal* folder and select **All Tasks > Manage Private Keys** from the context menu.

c. Select your computer from the **Location** field.

d. Add the ISM user to the **security** group and give this user Read access.

e. *Optional*: If you have multiple certificates with the same subject, repeat Steps 1a-1d for each of them.

If the certificate is in the *\Personal* folder, provide a new CertificateSubject parameter (Identity set > Tokens list) using **Parameter Management** in Administrator. If the certificate is not a self-signed certificate, you need to also set the CertificateValidOnly parameter (Identity set > Tokens list) to **True** in Administrator. Changing this setting ensures that your certificate replaces the delivered self-signed certificate when signing tokens.

# Changing Log Level for OnCall.RealTime.WebApi

***To change the log level for OnCall.RealTime.WebApi:***

1. Select the *OnCall.RealTime.WebApi.log4net.config* file found in the *\Program Files\Intergraph\OnCall.RealTime.WebApi* folder.
2. Change the *<root><level value="WARN">* and *<logger name="NetMessage"><level value="WARN">* values as needed.

# Changing Log Level for OnCall.Identity

***To change the log level for OnCall.Identity:***

1. Stop **OnCall.Identity** if the service is running.
2. Navigate to the installed folder at *C:\Program Files\Intergraph\OnCall.identity*.
3. Open *OnCall.IdentityServer.dll.config* using a text editor.
4. Locate the *<add key="defaultDebugLevel" value="1" />* in the code.

5. Change the value to increase or decrease the amount of logging produced.

   Valid values range from 0 to 5. Zero being the least amount of logging, and five the most amount of logging.

6. Save the change.
7. Restart **OnCall.Identity**.

   The newly defined value log output is now used.

# Set Up Backend Services in ISM

## Set Up Peering in ISM

By default, OnCall Dispatch does *not* require peering.

If you have add-ons that require running in a peered configuration, perform the following steps.

When running applications in a peered setup, ISM must be configured on both servers so that ISM can detect which system is its peer. Because peering requires sending packets between the peered OnCall Dispatch instances and because increased network traffic can impact overall performance, Hexagon recommends using peering only when necessary.

***To set up two computers to be peered in ISM:***

1. Run ISM Administrator.
2. From the menu, select **Manager > Peer Settings**.
3. The default peer wait delay is 10 seconds. Take the default.
4. Specify the peer name. This is the name of the peered system.
5. Click **Apply**.

## Set Up ISM Configuration Files

***To set up the services to run under ISM:***

1. Open a PowerShell window using the **Run as administrator** option.
2. From the PowerShell windows, define the following environment variables:

- **OnCallSystemRoot** - This is where OnCall Dispatch is or can be installed. This is typically *C:\Program Files\Intergraph*, for example, `$env:OnCallSystemRoot = "C:\Program Files\Intergraph"`.
- **OnCallDeliveryRoot** - This is wherever your delivery media is installed. For example, `$env:OnCallDeliveryRoot = "C:\delivery\IPS1122 - HxGN OnCall Dispatch - Advantage\Advantage"`.

3. Update ISM configuration files. This script searches for files named **app.json* in the OnCallSystemRoot and copies them to *C:\ProgramData\Intergraph\Cad\ISM*.
   a. On a primary server, run the following PowerShell command:

      ```
      & "$env:OnCallDeliveryRoot\OrganizeIsmConfigs.ps1"
      -InstallDirectory $env:OnCallSystemRoot
      ```

   b. On a secondary server, run the following PowerShell command:

      ```
      & "$env:OnCallDeliveryRoot\OrganizeIsmConfigs.ps1"
      -InstallDirectory $env:OnCallSystemRoot -Secondary
      ```

      You can also run this script with the `-Manual` option, which causes the script to prompt you for each step.

# Configure OnCall Dispatch using OcUtil

After installing the Administration Tools, you need to run *OcUtil.exe* to set up the initial data that is needed for the HxGN OnCall Dispatch Services and Website. *OcUtil.exe* adds locale strings to the database and seeds the roles and group tables with default data so that you can log on to Administrator to complete the configuration of your HxGN OnCall Dispatch system.

OcUtil is a console application delivered with HxGN OnCall Dispatch. By default, OcUtil is installed in *C:\Program Files\Intergraph\OnCall\OcUtil*. OcUtil uses a list of verbs and command line options to help bootstrap a new HxGN OnCall Dispatch system. You can run the `OcUtil help` command to get a list of verbs and command line options for each verb.

To run OcUtil, open Command Prompt as administrator. Change to the folder where OcUtil is installed by running the following command:

```
cd "C:\Program Files\Intergraph\OnCall\OcUtil"
```

# Load the Parameter Data with OcUtil

When you installed all the Administration Tools earlier in this document, the cfgparam package was included. By default, this package delivers the configuration parameter files to the *C:\Program Files\Intergraph\cfgparam* folder.

***To load parameter data:***

1. Open Command Prompt using **Run as administrator**.
2. Navigate to the OcUtil folder by using the following command:

   ```
   cd "C:\Program Files\Intergraph\OnCall\OcUtil"
   ```

3. Execute the `OcUtil upgradeCfgParam -d "C:\Program Files\Intergraph\cfgparam"` command.

   If any of the files fail to load, individually load them using the following command:

   ```
   OcUtil upgradeCfgParam -f <file name>
   ```

# Load the Command Line Data with OcUtil

The *CommandLines.json* file is delivered with OcUtil.

***To load command line data:***

1. Open Command Prompt using the **Run as administrator** option.
2. Navigate to the *\OcUtil* folder by running the following command:

   ```
   cd "C:\Program Files\Intergraph\OnCall\OcUtil"
   ```

3. Run the following command:

   ```
   OcUtil upgradeCommandLines -f "C:\Program Files\Intergraph\Oncall\OcUtil\ConfigurationData\CommandLines\CommandLines.json"
   ```

# Loading Localized Strings with OcUtil

Run OcUtil to populate the LocaleString database table with localized string entries. Localized string files are delivered with the OnCall.Strings package. By default, these files are installed in the *C:\Program Files\Intergraph\OnCall.Strings\LocalizedStrings* folder.

***To load the latest HxGN OnCall Dispatch strings:***

1. Open Command Prompt using **Run as administrator**.
2. Navigate to the OcUtil folder by using the following command:

   ```
   cd "C:\Program Files\Intergraph\OnCall\OcUtil"
   ```

3. Run the following command:

   ```
   OcUtil strings -i -d "C:\Program
   Files\Intergraph\OnCall.Strings\LocalizedStrings"
   ```

## Setting Up the Message Bus Configuration using OcUtil

OnCall Dispatch requires several important values be set in *cad-global.json.config* in order for the HxGN OnCall Dispatch applications to communicate over the message bus. HxGN OnCall Dispatch uses RabbitMQ for the message bus.

Once the CONFIG values have been set, the updates must be deployed to each web server.

***To populate the message bus configuration information on the local computer:***

1. Open Command Prompt using **Run as administrator**.
2. Navigate to the OcUtil folder by using the following command:

   ```
   cd "C:\Program Files\Intergraph\OnCall\OcUtil"
   ```

3. Run the `OcUtil MessageBusConfig` command with the following OcUtil parameter options:

   - `-m`

     The message bus provider. This parameter must be `RabbitMQ`.

   - `-p`

     The password for the message bus provider. This is encrypted by OcUtil before being placed in the *cad-global.json.config* file.

   - `-s`

     The full connection string for RabbitMQ.

     For example: `-s "EndPoints=Rabbit1,Rabbit2,Rabbit3;VirtualHost=MyVirtualHost;UserName=OnCall"`

The connection string must contain three required settings and an optional setting:

- A comma-separated list of your RabbitMQ endpoints
- The name of your RabbitMQ virtual host
- The username used to log into RabbitMQ
- *Optional:* The region, or site designation, associated with the environment

  Each region or site should have different endpoints and a different `HexagonRegion` value.

  This should only be specified if two sites have RabbitMQ federation configured. For more information about RabbitMQ federation, see the "Optional: Enabling Federation for Existing Clusters" topic in the *RabbitMQ Installation and Configuration Guide*.

Each of these settings must be separated by a semicolon. The connection strings should be different at site 1 and site 2, but all connection strings at site 1 would be the same. The same applies for site 2.

For example, if you are using RabbitMQ federation, run OcUtil on region 1:

```
-s
"EndPoints=Rabbit1a,Rabbit2a,Rabbit3a;VirtualHost=MyVirtualHost;UserName=OnCall;HexagonRegion=r1"
```

Then, run OcUtil on region 2:

```
-s
"EndPoints=Rabbit1b,Rabbit2b,Rabbit3b;VirtualHost=MyVirtualHost;UserName=OnCall;HexagonRegion=r2"
```

- `-a`

4. A complete MessageBusConfig example looks like the following: `OcUtil MessageBusConfig -m RabbitMQ -p password -s "EndPoints=localhost;VirtualHost=MyVirtualHost;UserName=OnCall"`

   The `HexagonRegion` value is optional and should only be included if your site has federation for RabbitMQ configured.

# Set the License Type using OcUtil

The **SetLicenseType** command lets you set your license type without having to directly log in to OnCall Dispatch. The command accomplishes this by using an OcUtil command. The following are the types of licenses supported.

***To set the license type:***

1. Open Command Prompt using **Run as administrator**.
2. Navigate to the OcUtil folder by using the following command:

   ```
   cd "C:\Program Files\Intergraph\OnCall\OcUtil"
   ```

3. Run the following command**:**

   ```
   OcUtil SetLicenseType  -c [Configuration Name]  -e | -t | -r | -p
   ```

   The configuration name must match an entry in the cad_pf parameter in *cad-global.json.config* file.

   Use the one of the following options to set the license.

   - `-e` (Evaluation)
   - `-t` (Test)
   - `-r` (Training)
   - `-p` (Production)

The following are examples of running the OcUtil `SetLicenseType` command.

```
ocutil SetLicenseType -c A  -e
ocutil SetLicenseType -c AU3428  -t
ocutil SetLicenseType -c AU3428  -r
ocutil SetLicenseType -c AU3428  -p
```

# Seed the Group and Role Tables using OcUtil

To sign into OnCall Dispatch, you must populate the OnCall Dispatch group and role tables and set your default user group in the DefinedEmployee table. *See the Appendix for more information about OnCall Dispatch groups and roles.* (see "*Overview of OnCall Dispatch Groups and Roles*" on page 53)

OcUtil seeds the group and role tables and sets the DefinedEmployee record for a user, letting an administrator log in to OnCall Dispatch, Administrator, and HxGN OnCall® Dispatch | Dashboard. When you are running the OcUtil seedUsers command against a new database, you need to specify the `-a [agency]` and `-e [employeeId]` so that OcUtil creates a DefinedEmployee record for the user.

***To seed group and role tables:***

1. Open Command Prompt using **Run as administrator**.
2. Navigate to the OcUtil folder by using the following command:

   ```
   cd "C:\Program Files\Intergraph\OnCall\OcUtil"
   ```

3. Run the following command: `OcUtil seedUsers -u [username] -a [agency] -e [employeeId]`
   - The username is the username you specify to login.
   - The agency is the employee's agency.
   - The employeeId value must be an integer larger than zero.
   - You can specify `-p [password]`, or you can leave off the password and let the utility prompt you for the password.

The following is an example of running the OcUtil seedUsers command.

```
OcUtil seedUsers -u sandy -p sandyspwd -a myagency -e 123
```

# Add the Default NextNumber Entries

System entries are needed in the NextNumber database table. These system entries have negative **NumberType** values. OnCall Dispatch needs these entries to create identifiers for various items, such as common events.

***To add the default entries in the NextNumber database table:***

1. Open Command Prompt using **Run as administrator**.
2. Navigate to the OcUtil folder by using the following command:

   ```
   cd "C:\Program Files\Intergraph\OnCall\OcUtil"
   ```

3. Run the following command:

   ```
   OcUtil AddNextNumbers
   ```

# Using Configuration Files to Load Database Files

**Configuration Files** can be used to manage configuration files in the database. Configuration files can be uploaded, downloaded, and overridden using this page, as well.

You can also manage configuration files using OcUtil. See the "Configure OnCall Dispatch using OcUtil" topic for more information.

***To use Configuration Files to upload files into the database:***

1. Run **Administrator**.
2. Select **Administration > Configuration Files**.

   The **Configuration Files** page displays.
3. In the **Select Files to Upload** section, you need to provide the following information:
   - **Set Name** - A drop-down list of available parameter sets to select.
   - **Application Name** - The name of the group of files used for a particular purpose; for example, EventIcons.
   - **Configuration Name** - The configuration name of the file you intend to upload, such as OnCall.

     You should not load files into the default configuration.
   - **Logical Name (unique)** - The name that is used to uniquely identify the file in the database. If this is not specified, then the source file name is used. If multiple source files with the same name need to be loaded into the database, then it would be necessary to specify a logical name.
   - **Relative File Path (unique)** - The path where the file should be created on the server when it gets downloaded by OnCall. OnCall then determines the base folder and then appends the relative file path to it. If the relative file path is not specified, then the source file name is used.
4. Click **Select file**.

   If the logical name and relative file path are specified, then it is only possible to select a single file. If they are left blank, it is possible to select multiple files.
5. Locate the file and enter the **File name**.
6. Click **Open**.

The **Configuration Files** table is updated with a new row that includes the file you just uploaded and its associated information.

# Configure Load Balancer Health Check Endpoints

Configure health check endpoints in your load balancer to confirm the availability of your web servers. Hexagon recommends using the **OnCall.Website** endpoint; however, other endpoints are available for testing purposes.

The following table lists the web applications and their endpoints.

| Web Application | Endpoint |
|---|---|
| **CadNotificationService** | */cadnotificationservice/api/healthcheck* |
| **OnCall.Identity** | */oncall.identity/healthcheck* |
| **OnCall.RealTime.WebApi** | */oncall.realtime.webapi/healthcheck* |
| **OnCall.WebApi** | */oncall.webapi/healthcheck* |
| **OnCall.Website** | */oncall/healthcheck* |
| **RestfulCad (RestAPI)** | */restfulcad/api/healthcheck* |

# Reserve Ports for HxGN OnCall Dispatch Services

Many of the HxGN OnCall Dispatch services expose a web API. The HxGN OnCall Dispatch WebApi communicates with HxGN OnCall Dispatch services using HTTP requests and RabbitMQ messages. You may need to reserve the ports that the services are using for their web API. The *ReserveURLNamespace.bat* script runs the `netsh http add urlacl` command, which reserves the ports and URLs that the services need.

The *ReserveURLNamespace.bat* file is also delivered with HxGN OnCall Dispatch. The *ReserveURLNamespace.bat* file can be used as needed to add (define), show, or delete port reservations. The BAT file calls *ReserveURLNamespace.ps1*. For more information and examples, run the following command from a PowerShell window:

```
get-help .\ReserveURLNamespace.ps1
```

***To reserve ports for the HxGN OnCall Dispatch services:***

1. Open File Explorer on the computer hosting the HxGN OnCall Dispatch services.
2. Navigate to the *C:\Program Files\Intergraph\OnCall\Core\ConfigurationData\Scripts* folder.

   The following ports are reserved for these services. If needed, update the port numbers on your system by changing the values in your ISM configuration file and changing the port numbers in the *ReserveURLNamespace.bat* before running the script.

| Service | Port |
|---|---|
| **RestAPI** | 8080 |
| **CADNotificationService** | 8081 |
| **Deccan API** | 8088 |
| **Calltaker** | 9001 |
| **ContactManagerModule** | 9002 |
| **DialogsModule** | 9003 |
| **CadBulkLoaderService** | 9004 |
| **Alert Module** | 9005 |
| **DeviceNotificationModule** | 9006 |
| **Recommend Unit Service** | 9007 |
| **Tracker** | 9008 |
| **RoleAdminModule (AdminCommands)** | 9010 |
| **ConfigServer** | 9011 |
| **InquiryModule** | 9014 |
| **OnCall StringServerModule** | 9015 |

| Service | Port |
|---|---|
| **LogonModule** | 9016 |
| **ProduceWorkModule** | 9017 |
| **GeoFence Service** | 9018 |
| **Loi Service** | 9019 |
| **Informer** | 9020 |
| **FireStationPrintingModule** | 9021 |
| **FireStationAlertingModule** | 9022 |
| **DashboardModule** | 9023 |
| **DataServiceModule** | 9024 |
| **EventCommandsModule** | 9025 |
| **GeoModule** | 9026 |
| **GeoFenceModule** | 9027 |
| **UnitCommandsModule** | 9028 |
| **TimersModule** | 9029 |
| **OnCall OcUtilServiceModule** | 9030 |
| **AniAliModule** | 9031 |
| **Copy Environment** | 9032 |
| **SopServiceModule** | 9033 |
| **BroadcastModule** | 9034 |
| **AuditCommandModule** | 9035 |
| **AdUpdateModule** | 9036 |
| **DefinitionsCacheModule** | 9037 |

| Service | Port |
|---|---|
| **InformerProviderModuleCommSys** | 9038 |
| **InformerProviderModuleOnCallRecords** | 9039 |
| **InformerProviderModuleRabbitMQ** | 9040 |
| **InformerProviderModuleODBC** | 9041 |
| **FacilityCommandsModule** | 9042 |
| **CommunicationsModule** | 9043 |
| **FirestationPrintingProviderModuleRabbitMQ** | 9044 |
| **FirestationAlertingProviderModuleRabbitMQ** | 9045 |
| **DbArchive Service** | 9046 |
| **CADLink** | 9047 |
| **FIRELink** | 9048 |
| **RMSLink** | 9049 |
| **PushToTalkModule** | 9050 |
| **Outlook Calendar Service** | 9051 |
| **OnCall Identity** | 44318 |
| **OnCall WebApi** | 44321 |
| **OnCall RealTime WebApi** | 44322 |
| **OnCall Website** | 44323 |
| **OnCall Proxy** | 44343 |

3. Right-click *ReserveURLNamespace.bat* and select **Run as administrator**.

You may need to restart the HxGN OnCall Dispatch services after making this change.

4. If the website still cannot connect to a BaseApp's web API, make sure you have configured the firewall on the servers to allow access.

   - You need to expose port 44343 on your server firewall. Next, you need to change the load balancer to access the website on port 44343.
   - If this is a test environment without a load balancer, the **ONCALL_BASE_URL** value in the *cad-global.json.config* file needs to be updated to include port 44343. For example, the URL would look like this: *https://servername.domain.com:44343/oncall*.

# Configure the Firewalls

Configure the firewalls on your database servers, application servers, and web servers to allow access.

See the following topics for more information:

- "*Configure Firewalls* (on page 59)" for information about allowing traffic from Hexagon applications
- "Firewall Settings" in the *Oracle 19c Server Installation and Configuration Guide*
- "Configuring the Firewall to Allow SQL Server Traffic" in the *SQL Server Installation and Configuration Guide*

# Start the OnCall Dispatch Services

***To start the OnCall Dispatch services:***

1. Start the ISM service by running the following PowerShell command for each server:

   ```
   Start-Service ism
   ```

   a. Use ISM Administrator to monitor the status of your HxGN OnCall Dispatch services.

   b. Wait until all of the services are running before proceeding.

   c. You may experience a heavy CPU load during this process. Run **Task Manager** to verify the CPU usage and wait until it is back to a normal level.

2. If you have any add-on products, you may need to start websites for them, as well.
3. If there are issues, check the log files in *C:\Temp* to identify them.

# Install Feature Flags

Feature flags are used to improve the upgrade process. OcUtil is used to enable features in a new version after the version has been installed.

***To install feature flags:***

1. Install OcUtil. Ensure the *InvokeFeatureFlagSetup.ps1* and *feature_flags.config.json* have been delivered with the product. These files are found in the root folder.
2. Using PowerShell, run the following command:

```
.\InvokeFeatureFlagSetup.ps1 -JsonConfigPath
'path\to\feature_flags.config.json'
```

# Verify that the HxGN OnCall Dispatch Website is Working

On a server hosting the HxGN OnCall Dispatch website, run Google Chrome. Try connecting to the HxGN OnCall Dispatch Website. The URL should look like, with your server name, *https://myserver.domain.org/oncall*. If there are problems, review the HxGN OnCall Dispatch web application's log file, which by default is *C:\Temp\OnCall.Website\OnCall.Website.log*.

# Run Administrator to Continue Setting Up Your HxGN OnCall Dispatch System

At this point in the installation and configuration process, Hexagon recommends logging onto Administrator to finish setting up your system.

***To finish setting up OnCall Dispatch:***

1. Launch a Google Chrome web browser.
2. Connect to your Administrator website. The URL typically looks like *https://myserver.mydomain.com/oncall/Administrator*.
3. Substitute your server and domain for *myserver* and *mydomain*.
4. Log in using the username you used when running the OcUtil seedUsers command. The username should have a valid OnCall Dispatch group and enough permission to run commands in Administrator.
5. Click the Help link in the upper right-hand corner.

   See the topic "Initial System Configuration" topic in the *HxGN OnCall Dispatch | Administrator Help* for additional set up steps, such as setting up the map. These steps are performed using Administrator.
6. *Optional:* Install the OnCall Dispatch client for access to OnCall Dispatch. See the Install the HxGN OnCall Dispatch Client Application topic for details on installing the client.
7. After you have Administrator running, override the parameters for tokens to point to the certificate you previously set up.

# Appendix

## Topics

Use Chocolatey, NuGet, and Scripts to Install and Uninstall Hexagon Software ..... 50

Uninstall Hexagon Software ..... 52

Overview of OnCall Dispatch Groups and Roles ..... 53

HA Database Configuration ..... 55

Configure Firewalls ..... 59

BaseApp Command Line Options ..... 64

# Use Chocolatey, NuGet, and Scripts to Install and Uninstall Hexagon Software

Most of the Hexagon software, such as HxGN OnCall Dispatch and the system administration tools, are installed using Windows batch files. The batch files call a PowerShell script called S*etup.ps1*, which uses Chocolatey and NuGet to install the Hexagon software. If this is the first time you are running this script, you are prompted to accept that you trust Hexagon as a publisher. Select `Always run` on this prompt.

You can run the Windows batch files to install and uninstall Hexagon software, but you may be interested in how the installation process works.

NuGet is a package management tool from Outercurve Foundation and is an open source under the Apache License 2.0. A NuGet package file is a ZIP file with a known structure. You can temporarily change the extension of a NUPKG file to ZIP to view the contents. If you do this, make sure to change back to a NUPKG file before running any installation files.

Chocolatey is a tool for automating software installations. Chocolatey relies on NuGet and PowerShell. Chocolatey supports delivering software from internal or external package feeds, but HxGN OnCall Dispatch uses NUPKG files delivered in the *\packages* folder of your installation media. You can interact with Chocolatey using the command line tool chocolatey (choco). You can use choco to view the list of software installed locally by Chocolatey by running `choco list -lo`. You can install software using `choco install`

and uninstall software using `choco uninstall`. To get more information about a command, type the command followed by /?. For example, to see the Help for the choco install, run `choco install /?`.

The Hexagon installation scripts install Chocolatey if it is not already installed. If you experience issues with the automatic installation of Chocolatey, you can manually install Chocolatey following the instructions *here* (*https://chocolately.org/install*). Make sure to run the Chocolatey installation using a prompt that you open with the **Run as administrator** option. By default, Chocolatey is installed to *\ProgramData\chocolatey* on your system drive. Note that *\ProgramData* is a hidden folder, so it is not shown by default in Windows File Explorer. To view the *\ProgramData folder*, click the **View** menu in File Explorer and check **Hidden items**.

# Uninstall Hexagon Software

The Hexagon software that you installed using the batch files or by directly running choco install does not appear in the **Programs and Features** dialog box in Windows. You can uninstall the HxGN OnCall Dispatch components using the uninstall batch files or by directly running choco uninstall.

You do not see HxGN OnCall Dispatch Core Services or the HxGN OnCall Dispatch Website in the **Programs and Features** dialog box in Windows. You can uninstall the HxGN OnCall Dispatch components using the *UninstallOnCall.ps1* file or by directly running choco uninstall.

## Using the Batch Files

There are batch files for uninstalling each chocolatey package.

***To uninstall using the batch files:***

1. Log on to the server using a login with administrator privileges.
2. If the application is running, stop it before uninstalling.
3. Open a command prompt as administrator.
4. Navigate to the appropriate folder in your installation media.
5. Run the appropriate batch file(s), such as *uninstall oncall.website.bat*.

   The script displays output in the command prompt window.

## Using Chocolatey Commands

Alternatively, you can use choco uninstall to uninstall the Hexagon packages.

***To remove a Hexagon package using Chocolatey:***

1. If the application is running, stop it before uninstalling.
2. Open a PowerShell prompt using the **Run as administrator** option.
3. Execute the choco uninstall command. For example, to uninstall the OnCall.Website package, run the following command:

   ```
   choco uninstall OnCall.Website -y
   ```

# Overview of OnCall Dispatch Groups and Roles

The HxGN OnCall Dispatch design is built on groups and roles. HxGN OnCall Dispatch defines four basic concepts:

- Users - Individuals authorized to access the HxGN OnCall Dispatch system. OnCall Dispatch reads the user data stored in the DefinedEmployee database table.
- Groups - A set of users. Groups can contain users, as well as other groups. OnCall Dispatch groups are stored in the UserGroup database table. A group has an associated action role and data role. Group members are stored in the UserGroupEmployee database table. A user has a default OnCall Dispatch group, which is stored in DefinedEmployee.DefaultUserGroup.
- Roles - Defines a set of permissions. Roles can inherit permissions from other roles. There are two types of roles: action roles and data roles. OnCall Dispatch action roles are stored in the ActionRole database table, and data roles are stored in the DataRole database table.
- Permissions - A permission is a specific command or level of access that a role grants. Permissions come in two forms: action permissions (for action roles) and data permissions (for data roles).
    - Action permissions let users run specific commands, such as **Create Event** and **Dispatch Unit**. Action permissions are associated with action roles and are stored in the ActionRoleCommand database table.
    - Data permissions let users view data for agencies and dispatch groups. For example, being able to cover a specific dispatch group is a data permission. Data permissions are associated with data roles and are stored in the DataRolePermission database table.

When a user logs into OnCall Dispatch, the system calculates the effective set of permissions for that user, based on that user's default group and that group's action role and data role (specified in the UserGroup table). After logging into OnCall Dispatch, the user can run the **Change Role** command to switch to another group. Users have both an action role and data role at any time.

## OcUtil seedUsers performs the following actions:

1. Create a new DefinedEmployee record for a user, such as "Sandy."
2. Create one new data role, called default_data_role, with cover access to all agency/dispatch groups in the system.

3. Create new action roles, including:
   - default_admin - This role has permission to run all Administrator commands.
   - default_advantage - This role has permission to run all HxGN OnCall® Dispatch | Advantage commands.
   - default_calltaker - This role has permission to run HxGN OnCall® Dispatch | Call-Taker commands.
   - default_dashboard - This role has permission to run all HxGN OnCall® Dispatch | Dashboard commands.
   - default_dispatcher - This role has permission to run all OnCall Dispatch commands.
   - default_viewer - This role has permission to run all HxGN OnCall® Dispatch | Viewer commands.
4. Create groups corresponding to the action roles. All of the following groups uses default_data_role for their data role:
   - Default Administrator Group - This group uses default_admin for its action role.
   - Default Advantage Group - This group uses default_advantage for its action role.
   - Default Calltaker Group - This group uses default_calltaker for its action role.
   - Default Dashboard Group - This group uses default_dashboard for its action role.
   - Default Dispatch Group - This group uses default_dispatcher for its action role.
   - Default Super Group - This group uses default_advantage for its action role.
   - Default Viewer Group - This group uses default_viewer for its action role.

OcUtil sets the user's default user group to Default Super Group. This gives the user permission to run all of the commands in Administrator, OnCall Dispatch, and Dashboard.

# HA Database Configuration

The following are the configuration entries used by the data access layer (HaClient). Some of these entries can be modified using the CAD Query Tool. A CAD database connection must be made using a High Availability (HA) database configuration name. The HA database configuration information is stored in the *cad-global.json.config* file, which is located at *..\ProgramData\Intergraph\Cad*. The values specified in the *cad-global.json.config* file are used for all CAD database connections on that computer. Null values are represented as empty strings for the values described here.

The HA database configuration entries for Hexagon software should be identical on all computers that operate against the same HA database configuration. The data access layer verifies that the HA database configuration on the clients match the database configuration specified in the CadSystemInfo table in the database.

The CadSystemInfo table is a metadata table defined in *execute_initialize.xml*.

## HA Database Configuration Options

| Entry | Description |
|---|---|
| DEFAULT_CONN_APPEND_HISTORY | Determines if a cache history file is maintained when using Database Mirroring. Valid values are T or F. The cache history file can be useful for investigating connection failover problems.<br>Default value is F.<br>This entry is in the delivered CONFIG file. This entry cannot be set by CAD Query Tool. |
| DEFAULT_CONN_FILE | The name of the cache file for connection information when using Database Mirroring.<br>Default value is *\Temp\HaClientConn.txt*.<br>This entry is in the delivered CONFIG file. This entry cannot be set by CAD Query Tool. |
| DEFAULT_CONN_HIST_FILE | The name of the cache history file for connection information when using Database Mirroring. Each time the cache file is updated, a new entry is added to the history file.<br>Default value is *\Temp\HaClientConnhist.txt*.<br>This entry is in the delivered CONFIG file. This |

| | |
|---|---|
| | entry cannot be set by CAD Query Tool. |
| DEFAULT_DB_ERROR_FILE | The path and file name for the error file.<br>The default value is *\Temp\HaClientErr*.log*. The * is replaced with the executable name. |
| DEFAULT_DB_ERROR_FORMAT | Format for error log entries. |
| DEFAULT_DB_ERROR_LEVEL | Log level for the error file. |
| DEFAULT_DEBUG_DAILY_FILE | Set this to T if you want a new debug file created each day.<br>The default value is F. |
| DEFAULT_DEBUG_FILE | The name of the default debug log file.<br>By default, this is set to *C:\Temp\HaClientDbg*.log*. The * is replaced with the executable name. |
| DEFAULT_DEBUG_FORMAT | The format of each entry in the debug log. |
| DEFAULT_DEBUG_LEVEL_DATA_READER_LEAK | Log level for data reader leak detection debug. Set this to **Information** if you want every open and close of a data reader logged. This can help track down code that is not closing data readers. |
| DEFAULT_DEBUG_LEVEL_ERROR | Log level for error debug. |
| DEFAULT_DEBUG_LEVEL_GENERAL | Log level for general debug. Set to **Information** for high-level information, or **Verbose** for detailed information. |
| DEFAULT_DEBUG_LEVEL_PROCEDURE | Log level for procedure debug. Set to **Information** for high-level procedures, or **Verbose** for all procedures. |
| DEFAULT_DEBUG_LEVEL_PERFORMANCE | Log level for performance metrics on how long commands take. Set to **Information** level for high-level commands, or **Verbose** for all commands. |
| DEFAULT_DEBUG_LEVEL_SQL | Log level for SQL debug. Set this to **Information** if you want SQL statements logged. Set it to **Verbose** if you also want to see the number of records affected and an indicator of successful or failed |

| | |
|---|---|
| | completion. |
| DEFAULT_DEBUG_LEVEL_TRANSACTION | Log level for transaction debug. Set to **Information** to get logging on begin transaction, commit, and rollback commands. |
| DEFAULT_DEBUG_MAX_FILES | The maximum number of debug files. |
| DEFAULT_DEBUG_MAX_MEGABYTES | The maximum size (in Megabytes) of each debug file. |
| DEFAULT_FAILOVER_PARTNER_DELAY_TIME | Specifies the delay in seconds before a connection is attempted to the failover partner when using Database Mirroring.<br>The default value is 1 second.<br>This entry is in the delivered CONFIG file. This entry cannot be set by CAD Query Tool. |
| DEFAULT_REPLICA3_DELAY_TIME | Specifies the delay in seconds before a connection is attempted to the log shipping partner when using Database Mirroring and Log Shipping.<br>The default value is 3 seconds.<br>This entry is in the delivered CONFIG file. This entry cannot be set by CAD Query Tool. |
| DEFAULT_REPLICA4_DELAY_TIME | Specifies the delay in seconds before a connection is attempted to the second log shipping partner when using Database Mirroring and Log Shipping.<br>The default value is 3 seconds.<br>This entry is in the delivered CONFIG file. This entry cannot be set by CAD Query Tool. |

| **Registry Entry** | **Description** |
|---|---|
| CONNECTION_STRING | The connection string used to connect to the database. For more information on connection strings, see the "Adding and Modifying HA Database Configurations" topic in the *CAD Query Tool Help*. |

| | |
|---|---|
| DATABASE_TYPE | SQL Server or Oracle. |
| ENCRYPTION_ALGORITHM | Specifies the encryption algorithm used to encrypt the user password. If the password is not encrypted, this is set to **PlainText**. |
| HIGH_AVAILABILITY_TYPE | High availability type.<br>Valid values are SGL (single database without high availability), AAG (Always On Availability Group), DBM (Database Mirroring), and ODG (Oracle Data Guard). |
| OWNER | The user ID for the owner of the database. |
| USER | The user ID for accessing the database. |
| PASSWORD | This is the password used to connect to the database. The password can be encrypted. |

## CAD HA Database Configuration Name

A CAD configuration specifies an HA database configuration by using the DB_CONFIG value. The active HA database configuration is specified by the DB_CONFIG value of the default HxGN OnCall Dispatch configuration. The default configuration is specified by the **Default** value under **Configurations**. The CAD Query Tool lets you change the HA database configuration for a HxGN OnCall Dispatch configuration.

The DB_CONFIG value needs to be the same for the application servers and the database server or problems can occur.

| Entry | Description |
|---|---|
| DB_CONFIG | Contains the name of the HA database configuration. |

# Configure Firewalls

The HxGN OnCall Dispatch system requires multiple firewall configurations in order for products to communicate properly. The following table demonstrates some configuration information, as well as default ports and protocols, that you need to follow when setting up your network.

In addition to configuring the firewall for HxGN OnCall Dispatch applications, you must configure your application servers to support remote access.

| Product | Protocol | Listener Ports | Destination Ports | Destination Product | Configuration Instructions | Database Connection | RabbitMQ Connection |
|---|---|---|---|---|---|---|---|
| ISM | | | | ISM instance on peered server | ISM now uses the RabbitMQ connection that listener uses. | No | Yes |
| ISMAdmin | | | | ISM service | ISMAdmin no longer uses named pipes. All communicatio n is done over RabbitMQ. | No | Yes |
| CAD Connect for EdgeFrontier | | 135/UDP<br>389/TCP<br>1801/TC P<br>1081/UD P<br>2101/UD P<br>2103/UD P<br>2105/UD P<br>3527/UD P | | IFCADDirect | These are the port numbers that must be open for MSMQ to run. | No | |

| Product | Protocol | Listener Ports | Destination Ports | Destination Product | Configuration Instructions | Database Connection | RabbitMQ Connection |
|---|---|---|---|---|---|---|---|
| Mobile Responder | HTTPS | | | | | No | No |
| CAD Notification Service | HTTP or HTTPS | 443/TCP or 8081/TCP | | Custom application<br>The custom application informs CNS of the callback URL, which includes the port to use. | Default HTTPS request | Yes | Yes |
| CAD Database Utility | | | | | | Yes | No |
| CAD Query Tool | | | | | | Yes | No |
| Change Publisher Service | | | | | | Yes | Yes |
| Database Copy | | | | | | Yes | No |

| Product | Protocol | Listener Ports | Destination Ports | Destination Product | Configuration Instructions | Database Connection | RabbitMQ Connection |
|---|---|---|---|---|---|---|---|
| Deccan Interface | HTTP or HTTPS | 443/TCP or 8088/TCP | 443/TCP | Custom application<br>When using SSL, the site administrator determines the SSL port to be used by each custom application, which all default to port 443 when SSL.<br>Deccan uses 8088 by default. | Default HTTPS request | Yes | Yes |
| LOI Service | | | | | | Yes | Yes |
| OnCall.Proxy | HTTPS | 44343/TCP | 44343/TCP | *OnCall.Proxy.exe* | Default HTTPS request | No | Yes |

| Product | Protocol | Listener Ports | Destination Ports | Destination Product | Configuration Instructions | Database Connection | RabbitMQ Connection |
|---|---|---|---|---|---|---|---|
| RestAPI | HTTP or HTTPS | 443/TCP or 8080/TCP | 443/TCP | Custom application<br>When using SSL, the site administrator determines the SSL port to be used by each custom application.<br>RestAPI uses port 8080 by default. | Default HTTPS request | Yes | Yes |
| Tracker | UDP | 21000/UDP | 21000/UDP | When the Transport parameter is set to UDP in the HxGN OnCall Dispatch \| Tracker GeneralDetails parameter list. | Set the UdpReadPort parameter to the value wanted from 21000 through 21099 (default=21000). | No | Yes |

| Product | Protocol | Listener Ports | Destination Ports | Destination Product | Configuration Instructions | Database Connection | RabbitMQ Connection |
|---|---|---|---|---|---|---|---|
| Tracker | UDP | 21099/UDP | 21099/UDP | When the Transport parameter is set to UDP in the HxGN OnCall Dispatch \| Tracker GeneralDetails parameter list and PassiveMode is set to 0. | Set the UdpSendPort parameter to the value wanted from 21000 through 21099 (default=21099). | No | Yes |
| Tracker | CAD | RabbitMQ | RabbitMQ | When the Transport parameter is set to CAD in the HxGN OnCall Dispatch \| Tracker GeneralDetails parameter list. | | No | Yes |
| Scheduler Service | | | | | | Yes | Yes |

# BaseApp Command Line Options

The following command line options are available for use with the BaseApp.

| Command Line Option | Description |
|---|---|
| -d <debug level><br>--debug <debug level> | Use to define the debug level with 1 being the least and 5 being the most information, that is, each level includes the information from the previous level. |
| -p <path value><br>--path <path value> | The path for modules. |
| -n <path value><br>--addins <path value> | The path for add-ins. |
| -c <file name><br>--config <file name> | The configuration file from which to read settings. |
| -a <port><br>--apiport <port> | The port for the web server. |
| -t <host><br>--apihost <host> | The host for the web server. |
| -k<br>--logtoconsole | Duplicate logs to console. |
| -e<br>--enablehealthcheck | Enable health check for Kubernetes deployments. |
| -o<br>--enableaddondelivery | Enable delivery of add-on files and information. |
| -m <file names><br>--mef <file names> | The file names of assemblies to manually load into Managed Extensibility Framework (MEF). |
| -w | Only write CAD Listener messages. |

| | |
|---|---|
| --isCadListenerConnectionWriteOnly | |
| -v <string><br>--override <string> | The configuration override string used when starting the application. |
| -q<br>--enableSqlDebug | Enables SQL debugging in the log file. |

# Technical Support

Hexagon's Safety, Infrastructure & Geospatial division provides several ways to contact Support, including online case submission and phone support. For general Hexagon information, call 800-345-4856 (US). For phone support, see the *Contact Support page https://supportsi.hexagon.com/help/s/contactsupport?language=en_US*.

## Submit a Case Online

Hexagon provides an online method of requesting support 24/7.

1. Go to the *Support page https://hexagon.com/support-success/safety-infrastructure-geospatial*.
2. Click **Log in**.
3. Type your username and password, and click **Log in**.
4. From the **Resources** list, select **Contact Support**.

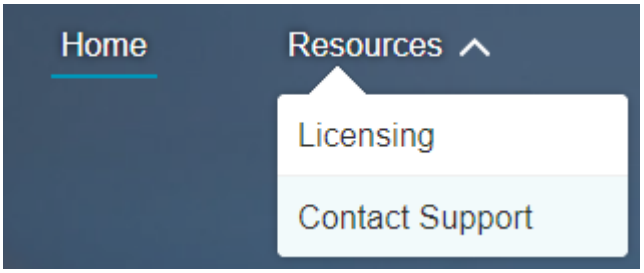


   The **Contact Support** page displays.
5. Click **Online case submission**.