+-12V VCC: R = 2k +- 1k, I = 2m;
+-5V VCC: R = 1k, I = 2m; R = 400, I = 5m (I intesa come OGNUNO)
+-7V VCC: R = 1.1k +- 200, I = 2m; (meglio con 1k) -- TEST 2 JFET: R = 1k, I = 4m
R = 560, I = 4m;

COMPRARE
-470
-680
-1K
-1.3K
-2K

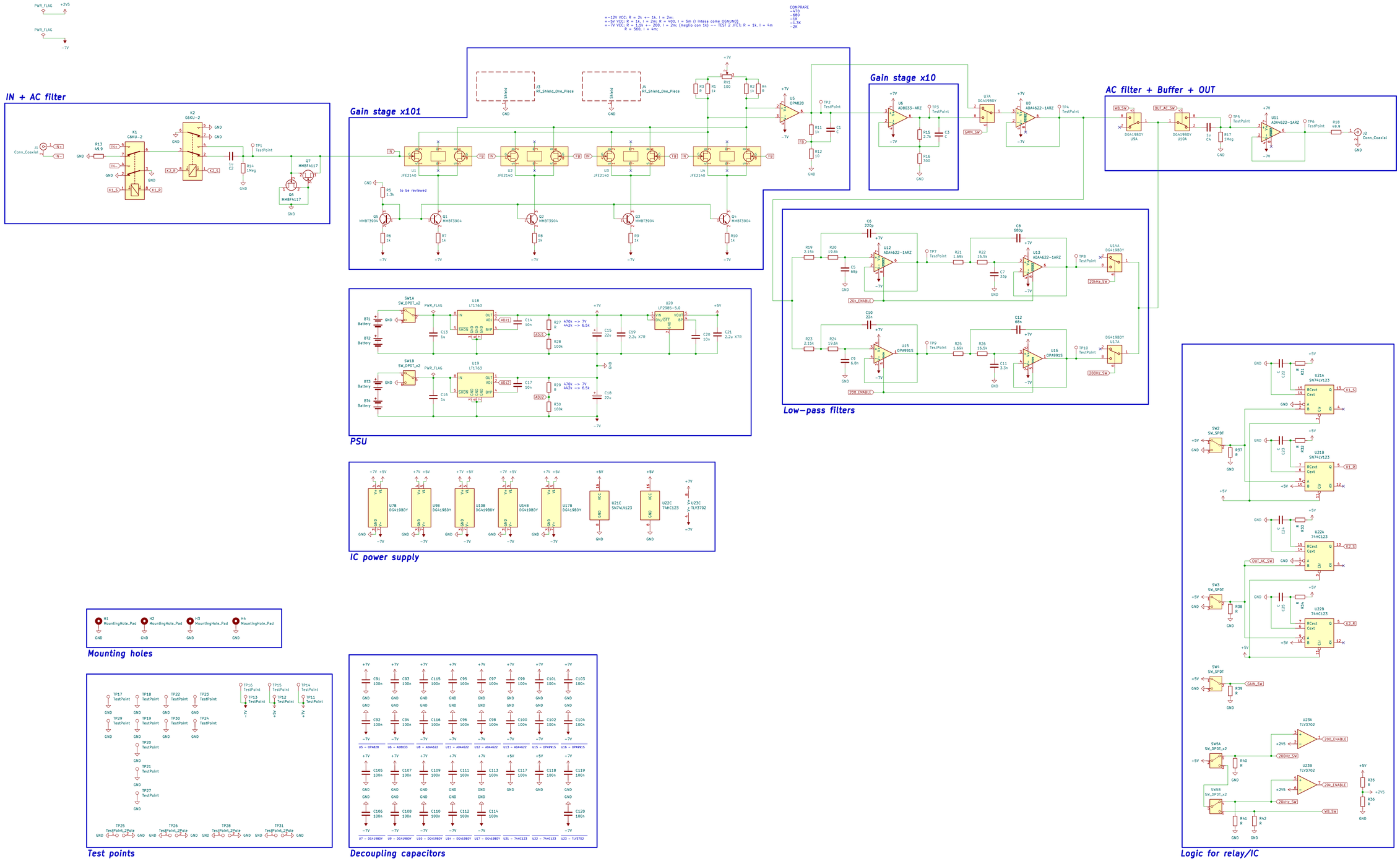

Sheet: /
File: LNA_v1.kicad_sch

Title: 1 Hz – 1 MHz Eurocard Low Noise Amplifier

Size: A1	Date: 06 April 2025	Rev: 1
KiCad E.D.A. eeschema 7.0.11-7.0.11-ubuntu20.04.1		Id: 1/1