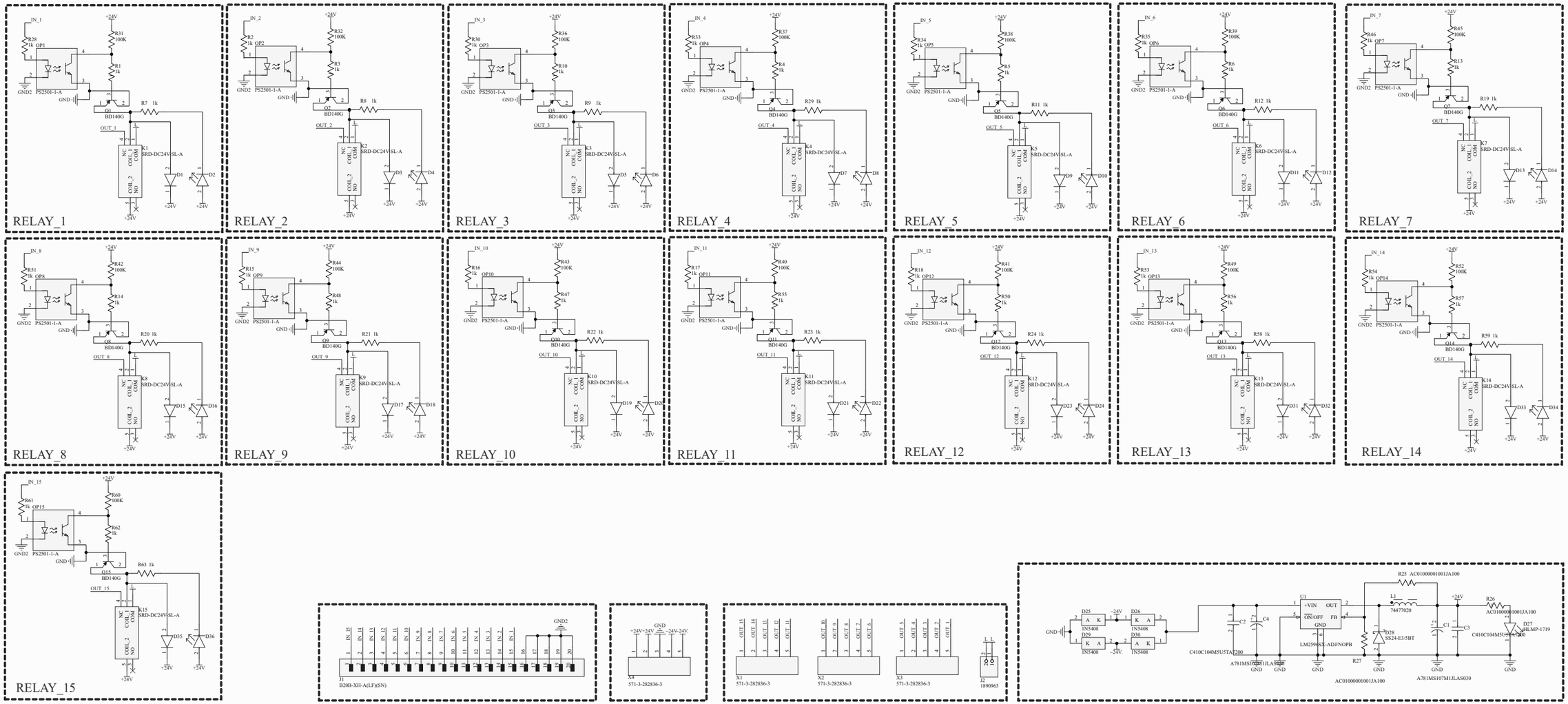
RELAY_1
RELAY_2
RELAY_3
RELAY_4
RELAY_5
RELAY_6
RELAY_7
RELAY_8
RELAY_9
RELAY_10
RELAY_11
RELAY_12
RELAY_13
RELAY_14
RELAY_15
PS2501-1-A
BD140G
SRD-DC24VSL-A
B20B-XH-A(LF)(SN)
571-3-282836-3
1890963
LM2596SX-ADJ/NOPB
SS24-E3/5BT
74477020
A781MS107M1JLAS030
C410C104M5U5TA7200
AC01000001001JA100
HLMP-1719