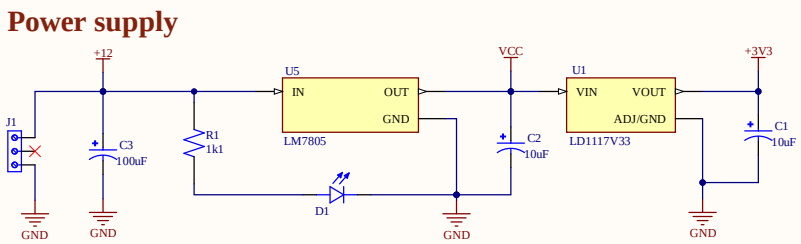

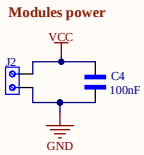

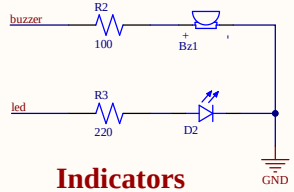

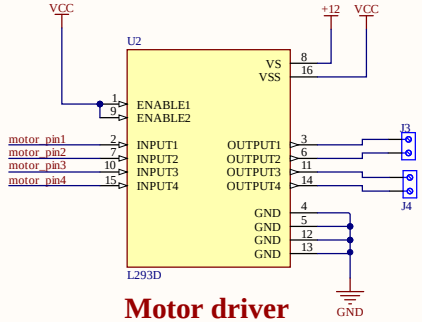

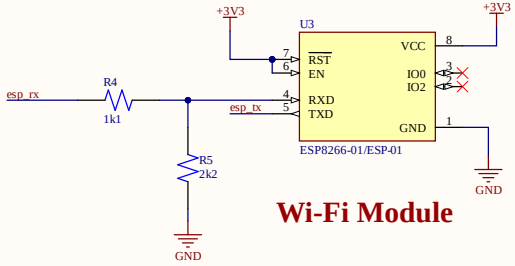

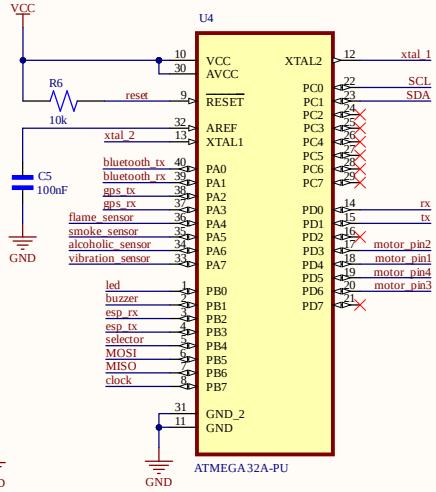

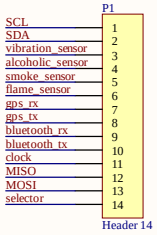

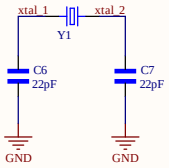

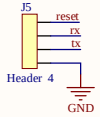

Title		
Size A4	Number	Revision
Date: 5-14-2023		Sheet of
File: V:\Office\...\schematic.SchDoc		Drawn By:

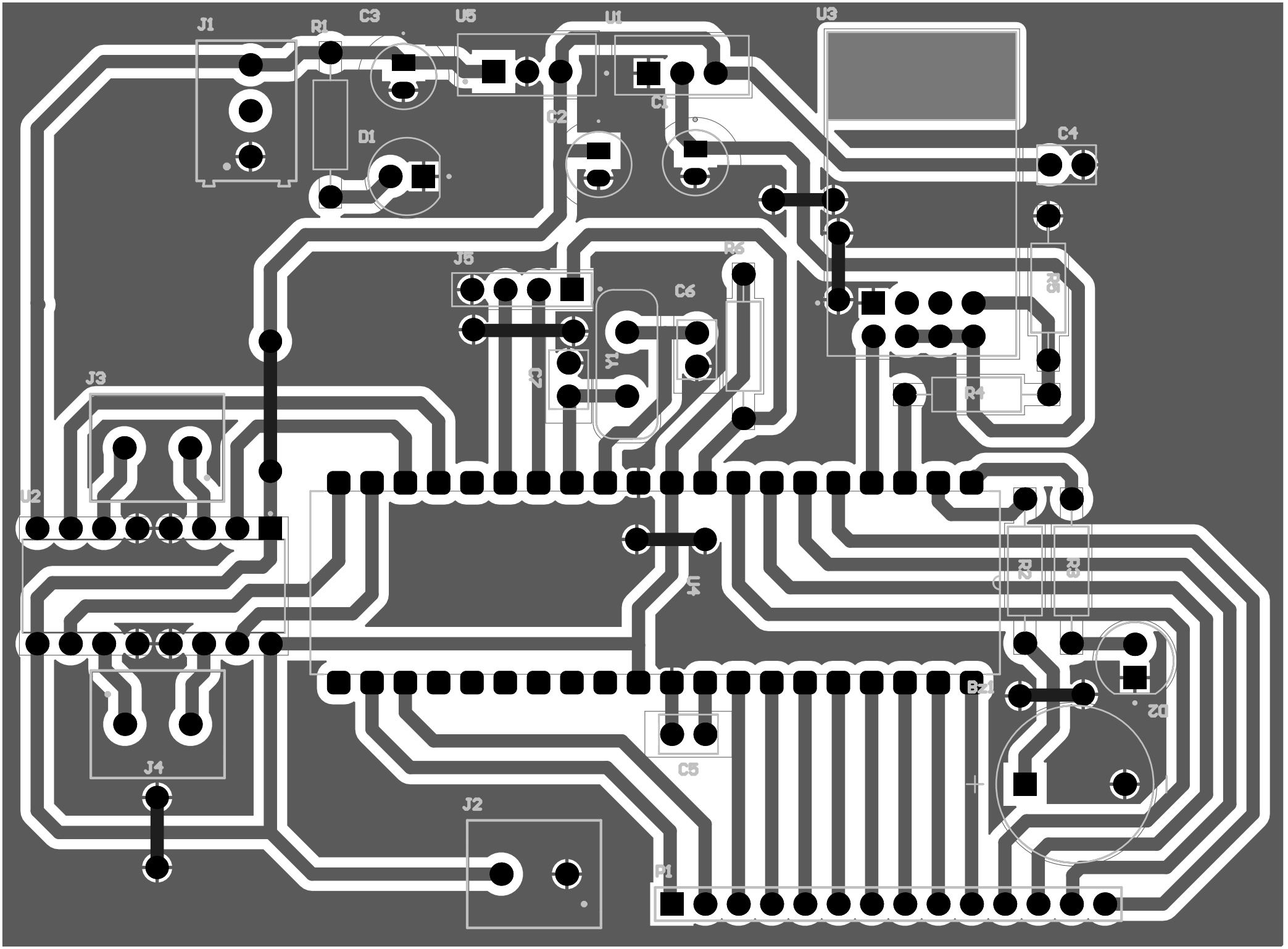
J1
R1
C3
U5
U1
U3
C1
C2
D1
C4
J5
R6
C6
R5
Y1
C7
R4
J3
U2
U4
R2
R3
B21
D2
C5
J4
J2
P1

Comment	Description	Designator	Footprint	LibRef	Quantity
AI-1223-TWT-12V-R	ELECTRO-MECHANICAL AUDIO INDICATOR	Bz1	XDCR_AI-1223-TWT-12V-R	Buzzer	1
10uF	FS-A	C1, C2	CAPPRD500W50D500H1100	Electrolytic capacitor	2
100uF	FS-A	C3	CAPPRD500W50D500H1100	Electrolytic capacitor	1
100nF	2200 pF Â±10% 250V Ceramic Capacitor X7R Radial	C4, C5	CAPRB500W50L450T300H550	Ceramic capacitor	2
22pF	2200 pF Â±10% 250V Ceramic Capacitor X7R Radial	C6, C7	CAPRB500W50L450T300H550	Ceramic capacitor	2
L08R5000Q1	LED, Orange, Through Hole, T-1 3/4 (5mm), 30 mA, 2.1 V, 635 nm	D1, D2	LEDRD254W57D500H1070	LED	2
691214110003	3 Position Wire to Board Terminal Block Horizontal with Board 0.138 (3.50mm) Through Hole	J1	691214110003	Terminal blocks - 3Pins (Small)	1
691111710002	2 Position Wire to Board Terminal Block Horizontal with Board 0.197 _5.00mm_ Through Hole	J2, J3, J4	691111710002	Terminal Block - 2Pins	3
Header 4	4 Position Header Connector Through Hole	J5	SULLINS_PPTC041LFBN-RC	Female header - 4Pins	1
Header 14	Header, 14-Pin	P1	HDR1X14	Header 14	1
1k1	(MFR-25FBF52-10K) 10,2 kOhm bei 1% 0,25W, 1/4W Durchbohrlochwiderstand Axial Metal Film	R1, R4	RESAD1100W55L680D260	Resistor (0.25W)	2
100	(MFR-25FBF52-10K) 10,2 kOhm bei 1% 0,25W, 1/4W Durchbohrlochwiderstand Axial Metal Film	R2	RESAD1100W55L680D260	Resistor (0.25W)	1
220	(MFR-25FBF52-10K) 10,2 kOhm bei 1% 0,25W, 1/4W Durchbohrlochwiderstand Axial Metal Film	R3	RESAD1100W55L680D260	Resistor (0.25W)	1
2k2	(MFR-25FBF52-10K) 10,2 kOhm bei 1% 0,25W, 1/4W Durchbohrlochwiderstand Axial Metal Film	R5	RESAD1100W55L680D260	Resistor (0.25W)	1
10k	(MFR-25FBF52-10K) 10,2 kOhm bei 1% 0,25W, 1/4W Durchbohrlochwiderstand Axial Metal Film	R6	RESAD1100W55L680D260	Resistor (0.25W)	1
LD1117V33		U1	TO255P1020X450X1968-3	LD1117V33	1
L293D	4-Channel Motor Driver 24V 16-Pin Power PDIP Tube	U2	DIP880W50P254L2000H510Q16	L293D	1
ESP8266-01/ESP-01	MakerFocus 4pcs ESP8266 ESP-01 Serial Wireless WiFi Transceiver Receiver Module 1MB SPI Flash DC3.0-3.6V Internet of Things WiFi Module Board Compatible with Arduino	U3	XCVR_ESP8266-01/ESP-01	ESP8266-01 Module	1
ATMEGA 32A-PU	AVR AVRÂ® ATmega Microcontroller IC 8-Bit 16MHz 16KB _8K x 32_ FLASH 40-PDIP	U4	DIP254P1524X482-40	ATMEGA16A-PU	1
LM7805		U5	TO254P1054X470X1955-3	LM7805	1
ECS-160-S-4	CRYSTAL T/H	Y1	XTAL_ECS-160-20-4X	Crystal oscilator	1