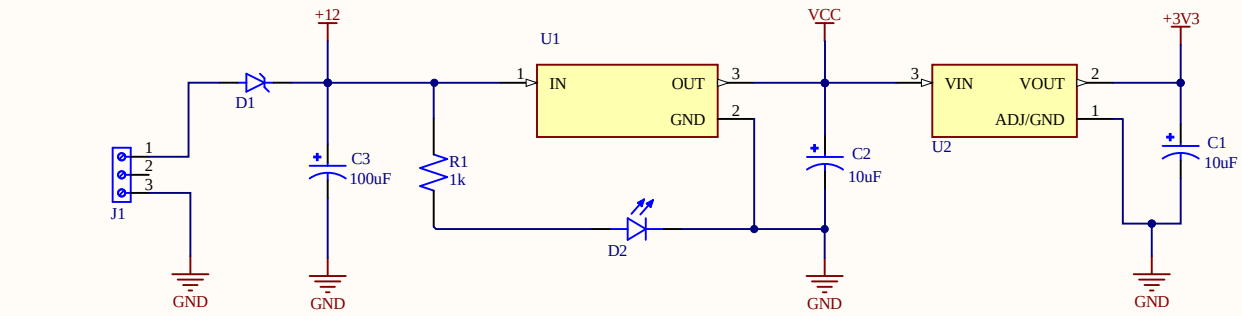

Power supply UNIT

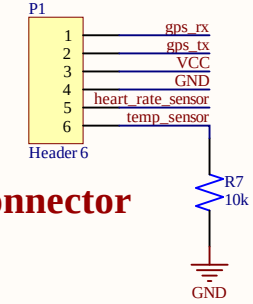

Connector

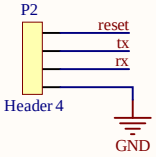

Programer pins

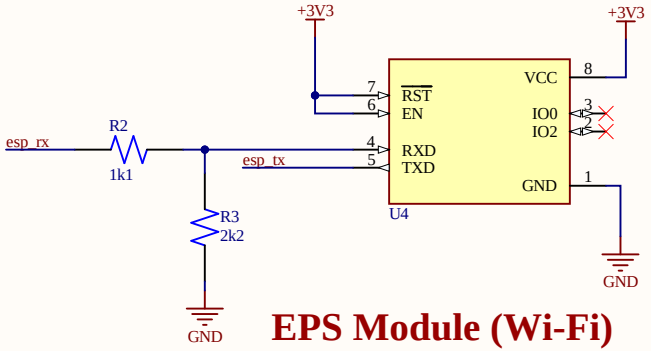

EPS Module (Wi-Fi)

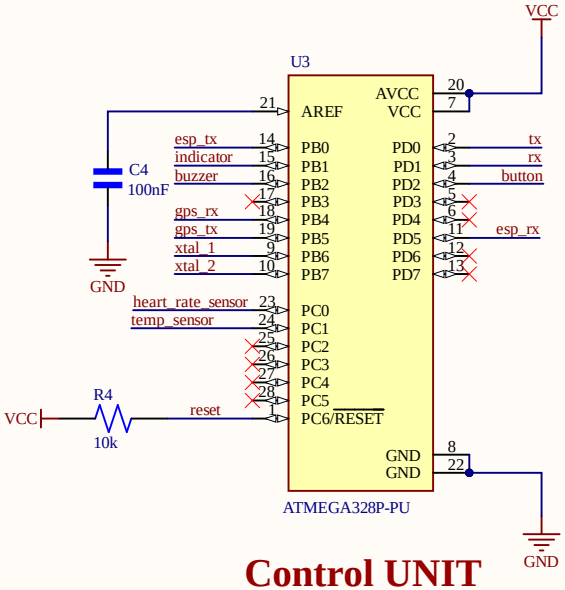

Control UNIT

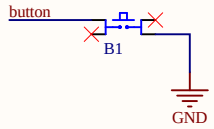

Emergency btn

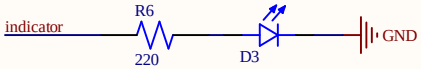

LED Indicator

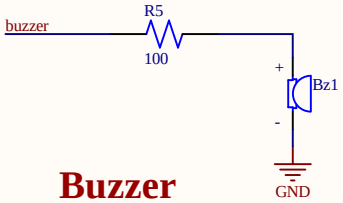

Buzzer

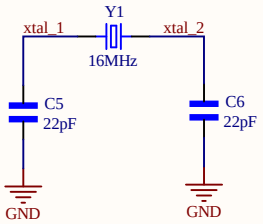

Title		
Size: A4	Number	Revision
Date: 5-23-2023		Sheet of
File: V:\Office\..\schematic.SchDoc		Drawn By:

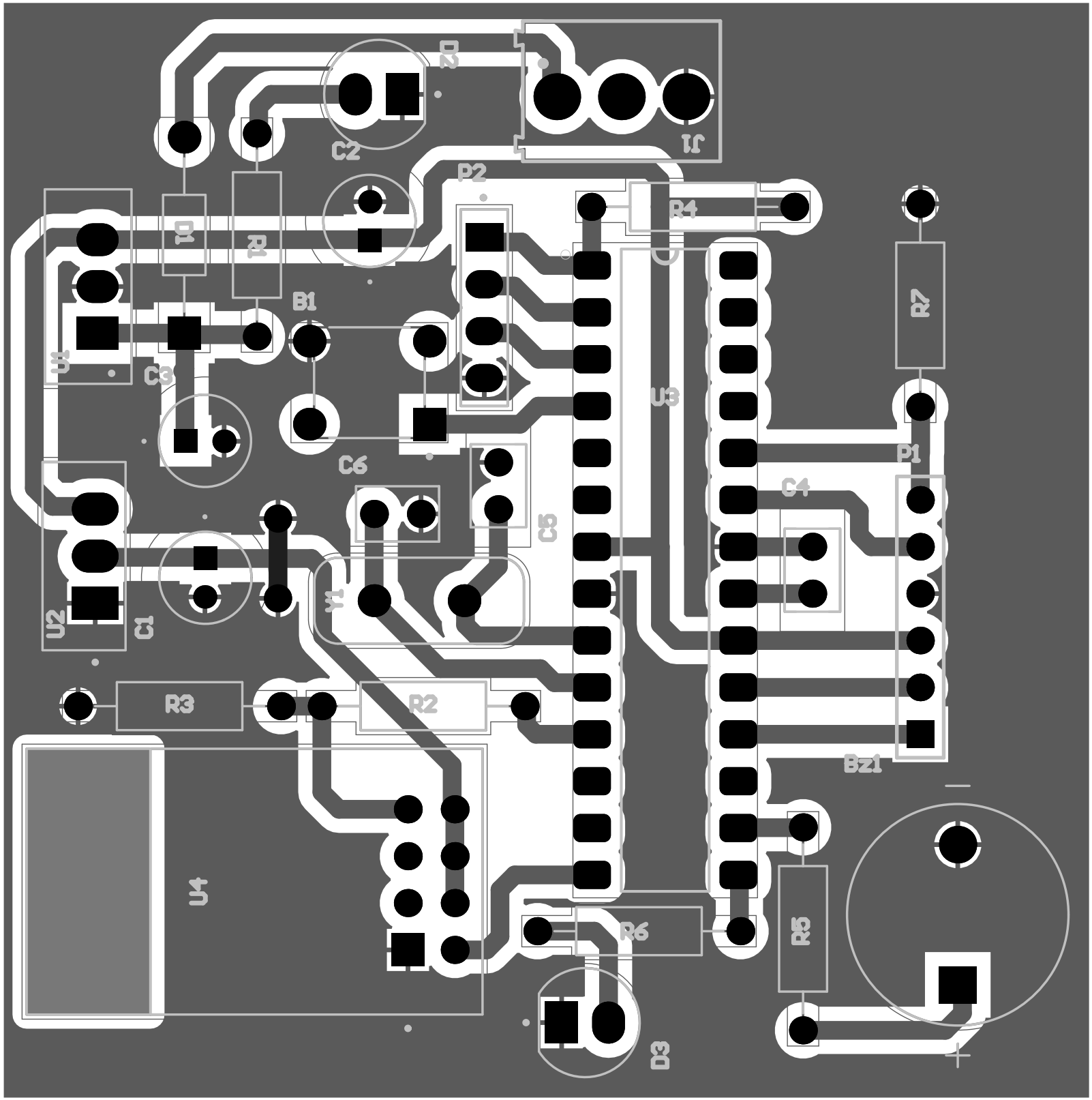
D2
J1
C2
P2
R4
D1
R1
B1
U1
C3
U3
R7
P1
C6
C4
C5
Y1
U2
C1
R3
R2
Bz1
U4
R6
R5
D3

Comment	Description	Designator	Footprint	LibRef	Quantity
Push button		B1	SW_TS02-66-95-BK-260-LCR-D	Push button	1
AI-1223-TWT-12V-R	ELECTRO-MECHANICAL AUDIO INDICATOR	Bz1	XDCR_AI-1223-TWT-12V-R	Buzzer	1
10uF	FS-A	C1, C2	CAPPRD500W50D500H1100	Electrolytic capacitor	2
100uF	FS-A	C3	CAPPRD500W50D500H1100	Electrolytic capacitor	1
100nF	2200 pF Â±10% 250V Ceramic Capacitor X7R Radial	C4	CAPRB500W50L450T300H550	Ceramic capacitor	1
22pF	2200 pF Â±10% 250V Ceramic Capacitor X7R Radial	C5, C6	CAPRB500W50L450T300H550	Ceramic capacitor	2
1N4745A	Zener Diode 16V 1W Â±5% Through Hole DO-204AL (DO-41)	D1	DIOAD1060W70L435D230	Zenner diode	1
L08R5000Q1	LED, Orange, Through Hole, T-1 3/4 (5mm), 30 mA, 2.1 V, 635 nm	D2, D3	LEDRD254W57D500H1070	LED	2
691214110003	3 Position Wire to Board Terminal Block Horizontal with Board 0.138 (3.50mm) Through Hole	J1	691214110003	Terminal blocks - 3Pins (Small)	1
Header 6	Header, 6-Pin	P1	HDR1X6	Header 6	1
Header 4	4 Position Header Connector Through Hole	P2	SULLINS_PPTC041LFBN-RC	Female header - 4Pins	1
1k	(MFR-25FBF52-10K) 10,2 kOhm bei 1% 0,25W, 1/4W Durchbohrlochwiderstand Axial Metal Film	R1	RESAD1100W55L680D260	Resistor (0.25W)	1
1k1	(MFR-25FBF52-10K) 10,2 kOhm bei 1% 0,25W, 1/4W Durchbohrlochwiderstand Axial Metal Film	R2	RESAD1100W55L680D260	Resistor (0.25W)	1
2k2	(MFR-25FBF52-10K) 10,2 kOhm bei 1% 0,25W, 1/4W Durchbohrlochwiderstand Axial Metal Film	R3	RESAD1100W55L680D260	Resistor (0.25W)	1
10k	(MFR-25FBF52-10K) 10,2 kOhm bei 1% 0,25W, 1/4W Durchbohrlochwiderstand Axial Metal Film	R4, R7	RESAD1100W55L680D260	Resistor (0.25W)	2
100	(MFR-25FBF52-10K) 10,2 kOhm bei 1% 0,25W, 1/4W Durchbohrlochwiderstand Axial Metal Film	R5	RESAD1100W55L680D260	Resistor (0.25W)	1
220	(MFR-25FBF52-10K) 10,2 kOhm bei 1% 0,25W, 1/4W Durchbohrlochwiderstand Axial Metal Film	R6	RESAD1100W55L680D260	Resistor (0.25W)	1
5V Regulator		U1	TO254P1054X470X1955-3	LM7805	1
3.3V Regulator		U2	TO255P1020X450X1968-3	LD1117V33	1
ATMEGA328P-PU	ATmega Series 20 MHz 32 KB Flash 2 KB SRAM 8-Bit Microcontroller - DIP-28	U3	DIP794W46P254L2967H457Q28B	ATMEGA328P-PU	1
ESP8266-01/ESP-01	MakerFocus 4pcs ESP8266 ESP-01 Serial Wireless WiFi Transceiver Receiver Module 1MB SPI Flash DC3.0-3.6V Internet of Things WiFi Module Board Compatible with Arduino	U4	XCVR_ESP8266-01/ESP-01	ESP8266-01 Module	1
16MHz	CRYSTAL T/H	Y1	XTAL_ECS-160-20-4X	Crystal oscilator	1