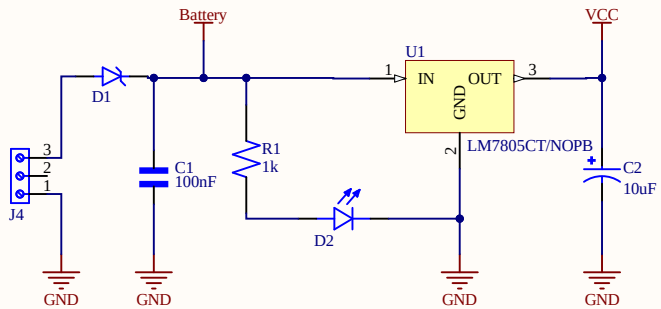

Power supply UNIT

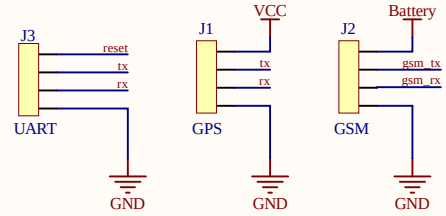

Connectors

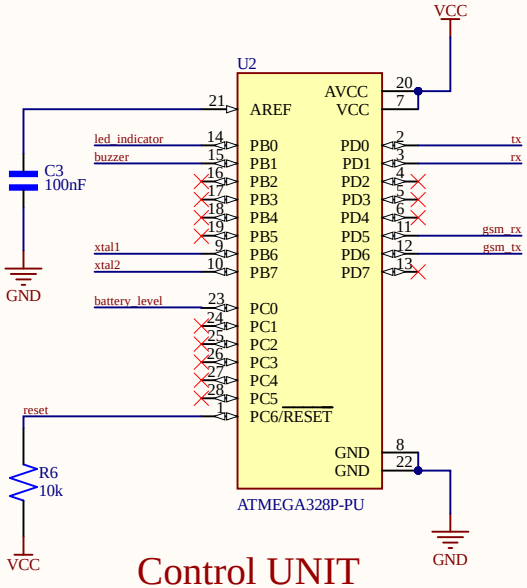

Control UNIT

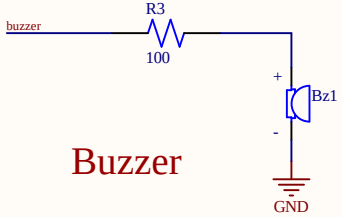

Buzzer

Battery meter

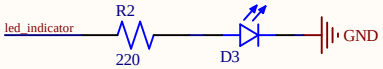

Indicator

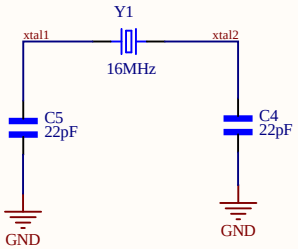

Oscilator

Title		
Size A4	Number	Revision
Date: 4-26-2023		Sheet of
File: V:\Office\..\schematic.SchDoc		Drawn By:

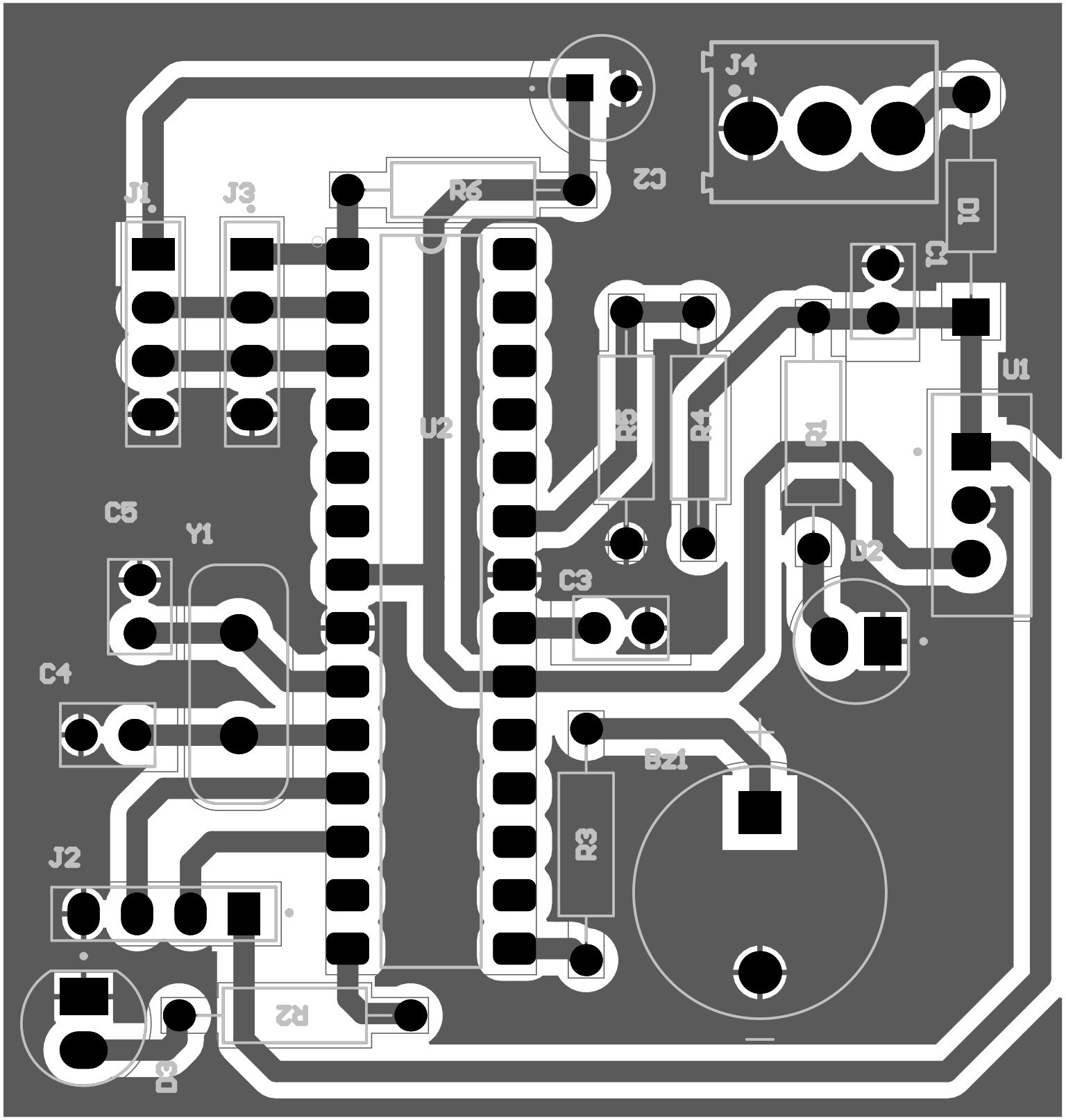
J4
C2
R6
J1
J3
Q1
Q1
U1
U2
R5
R4
R1
C5
Y1
D2
C3
C4
Bz1
R3
J2
R2
D3

Board Stack Report