NOT

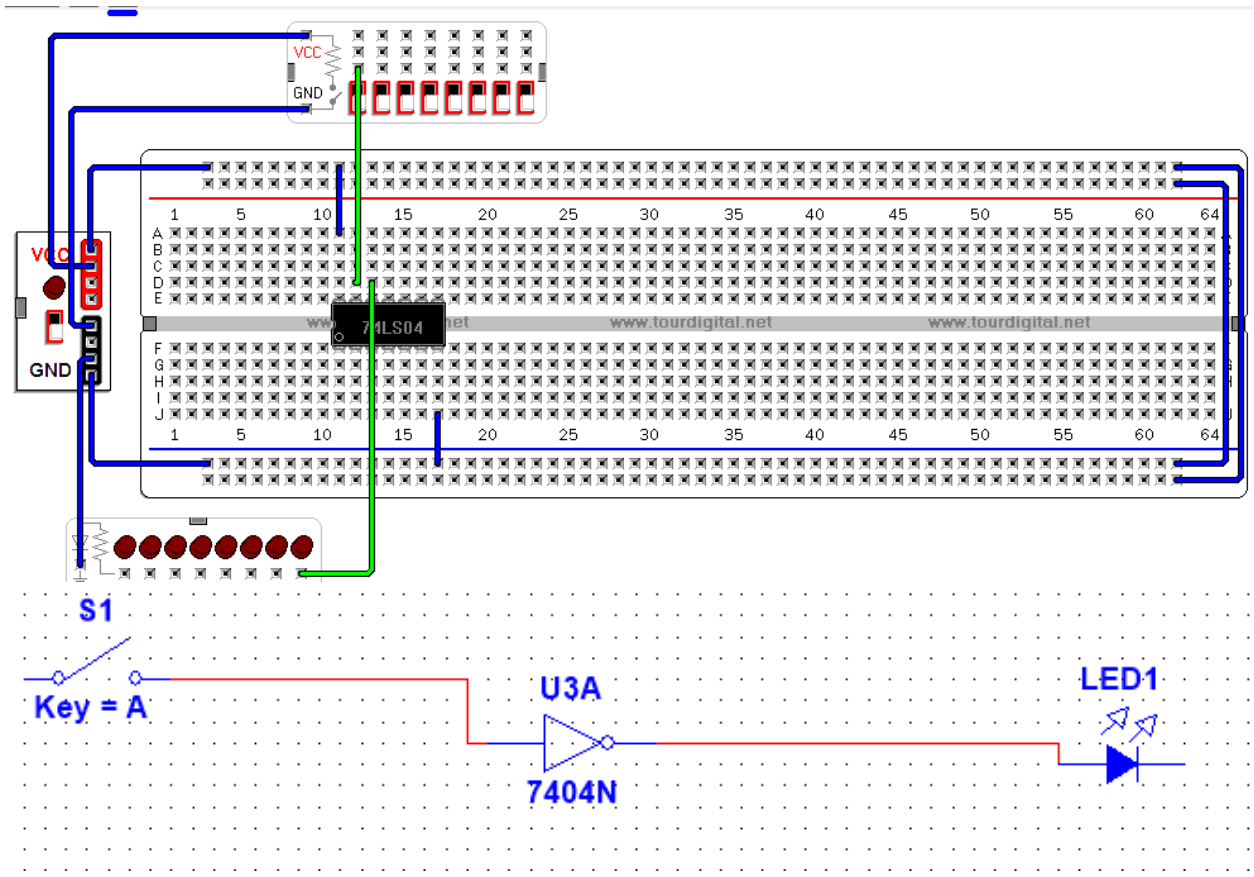

A	S
0	1
1	0

OR

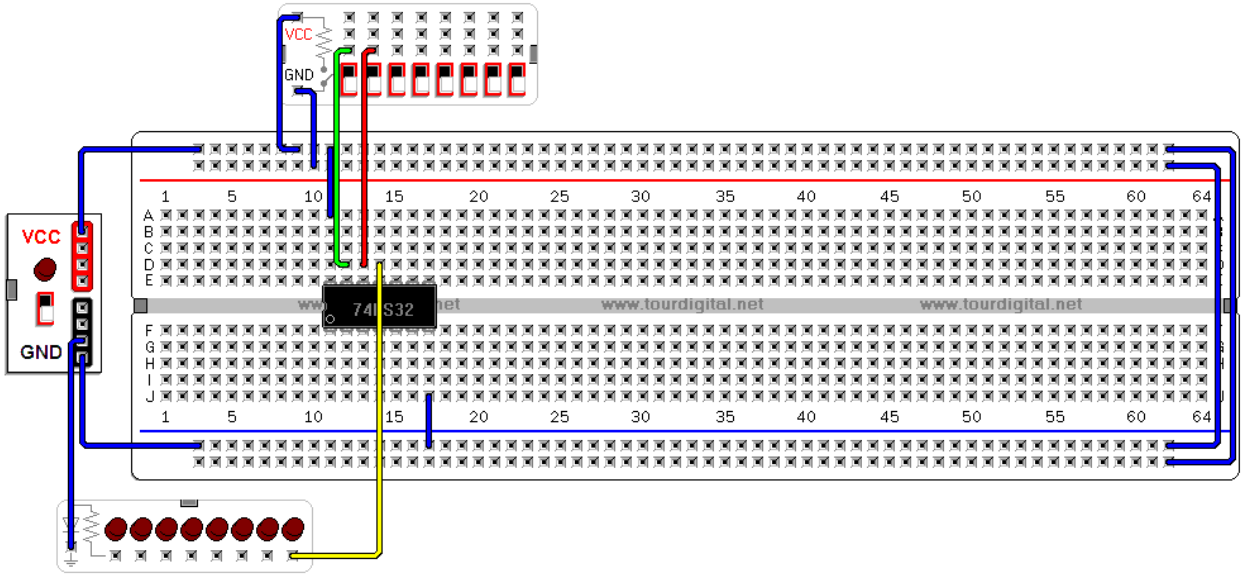

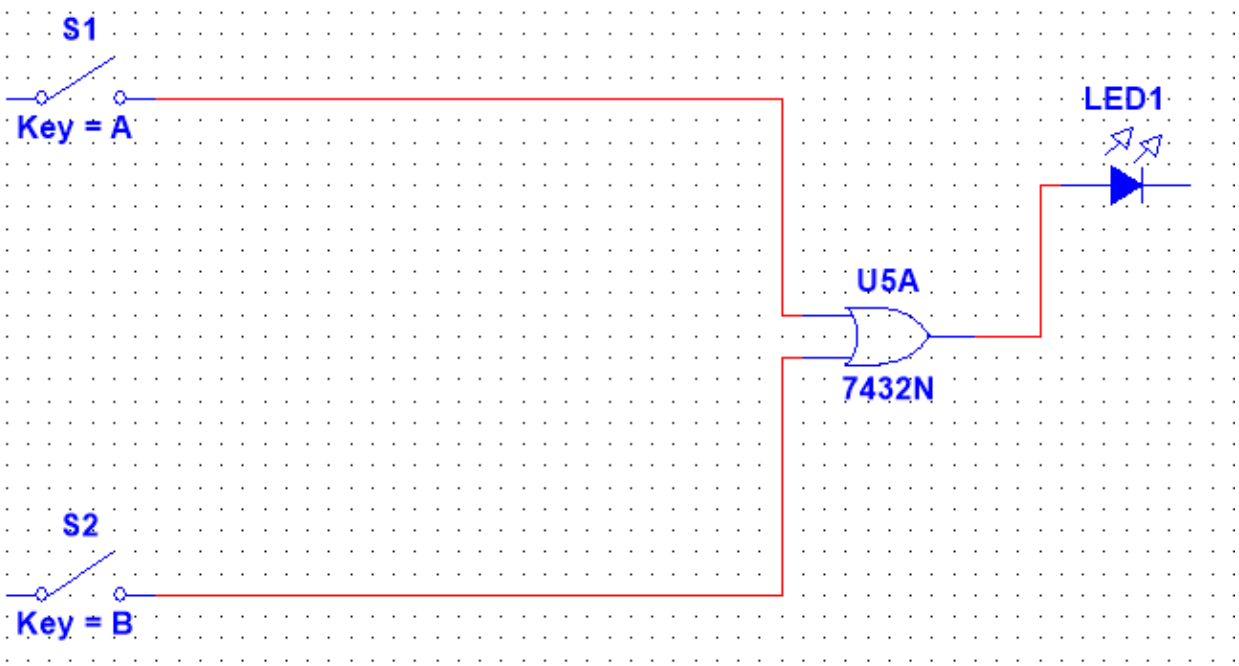

A	B	S
0	0	0
0	1	1
1	0	1
1	1	1

XOR

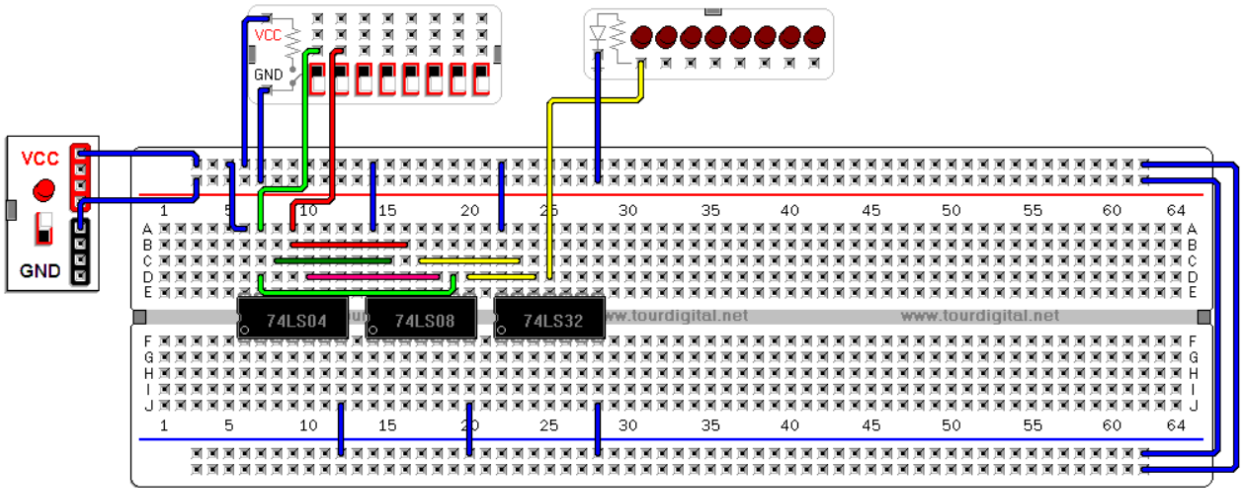

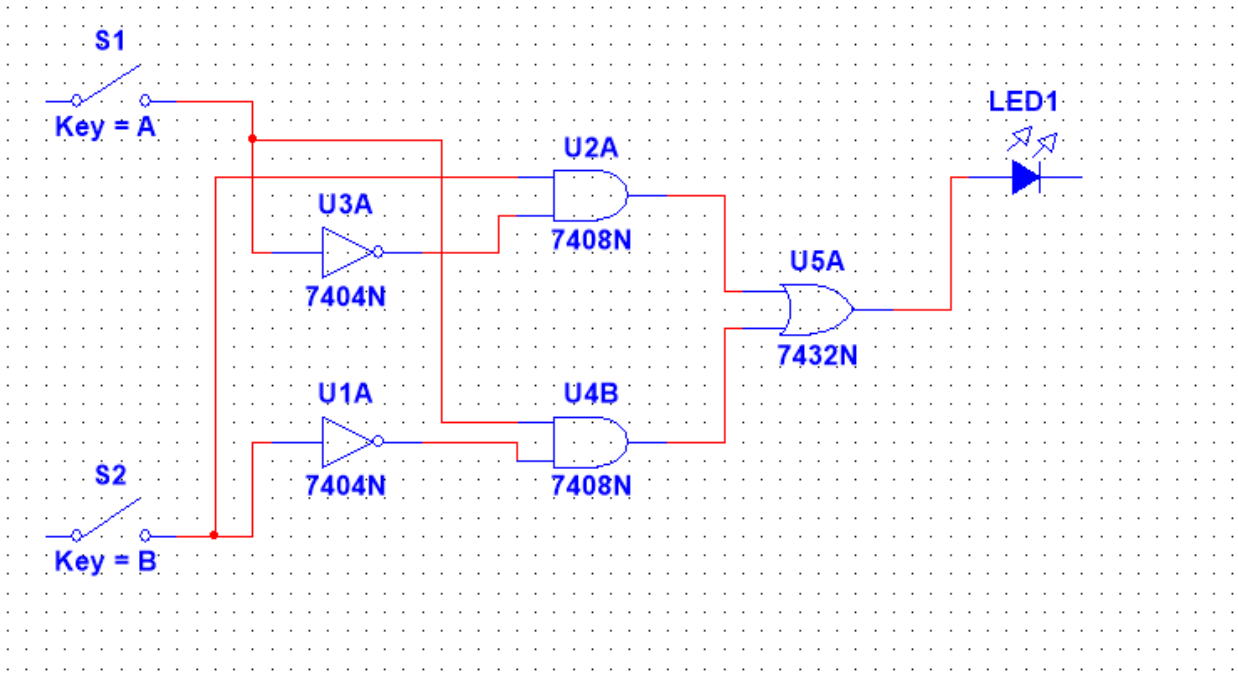

A	B	S
0	0	0
0	1	1
1	0	1
1	1	0

AND 2 entradas

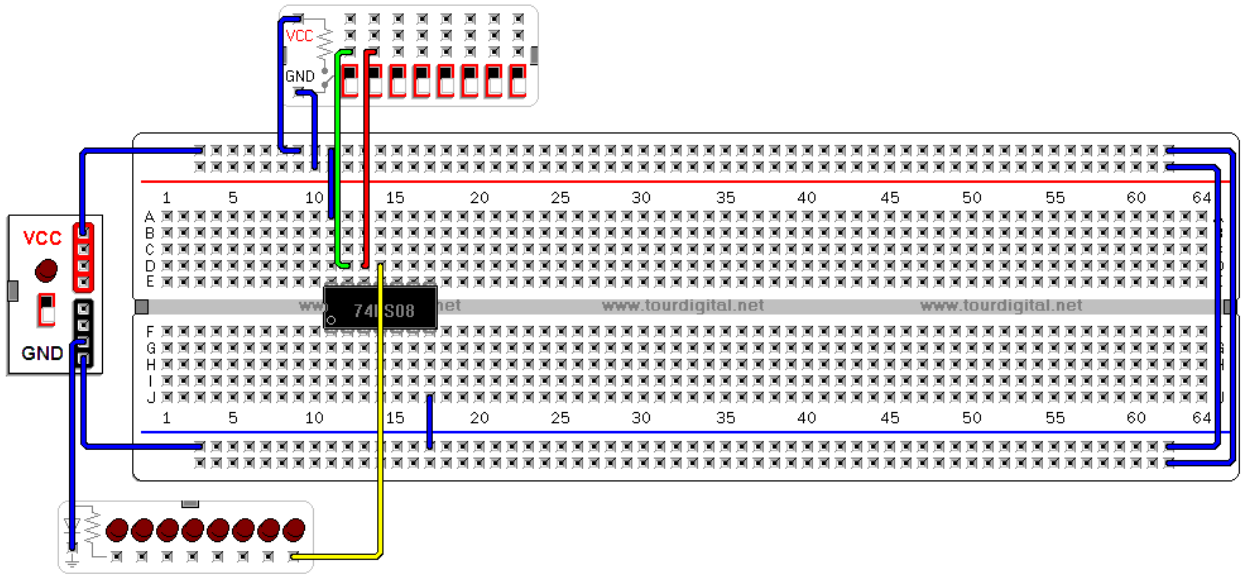

A	B	S
0	0	0
0	1	0
1	0	0
1	1	1

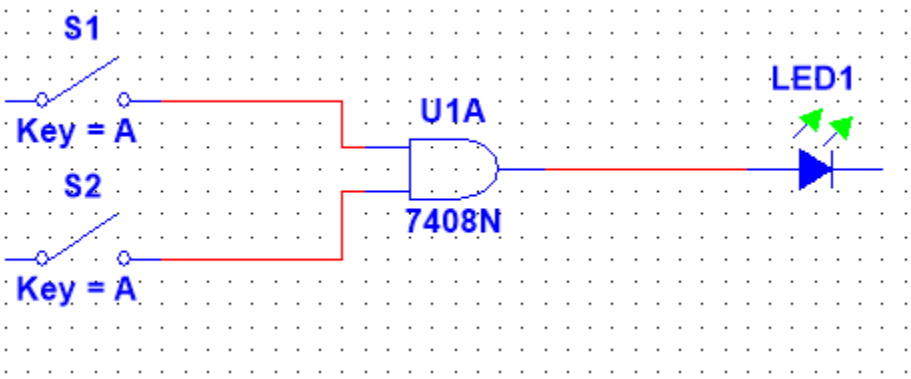

AND 3 entradas

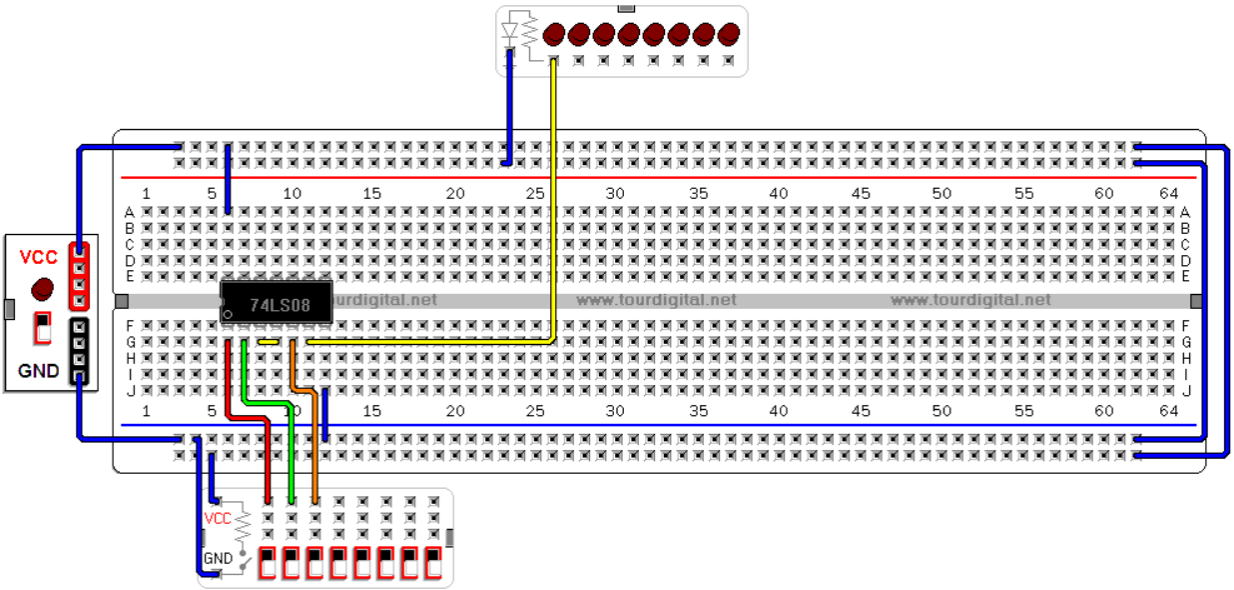

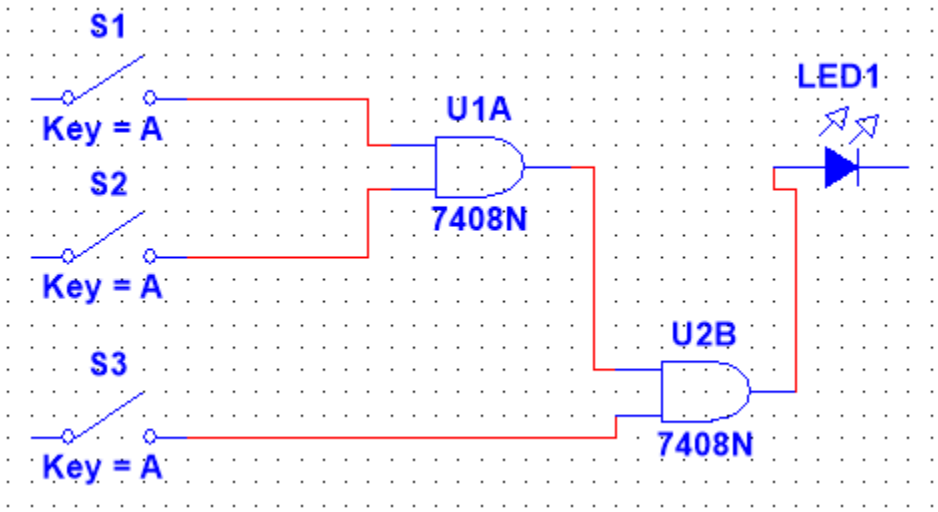

A	B	C	S
0	0	0	0
0	0	1	0
0	1	0	0
0	1	1	0
1	0	0	0
1	0	1	0
1	1	0	0
1	1	1	1

AND 4 entradas

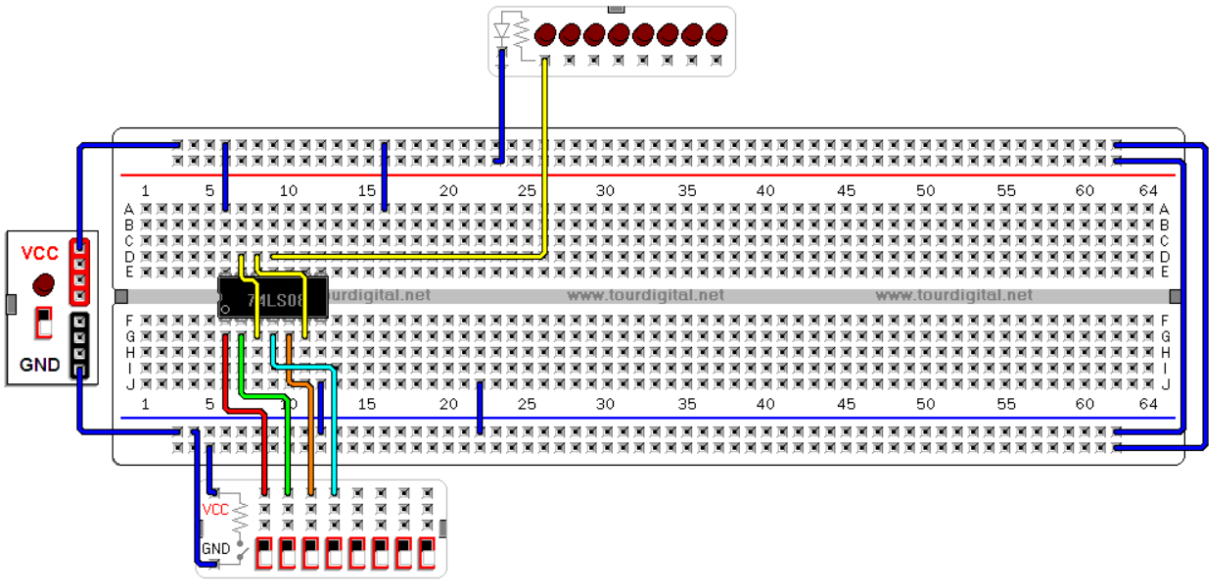

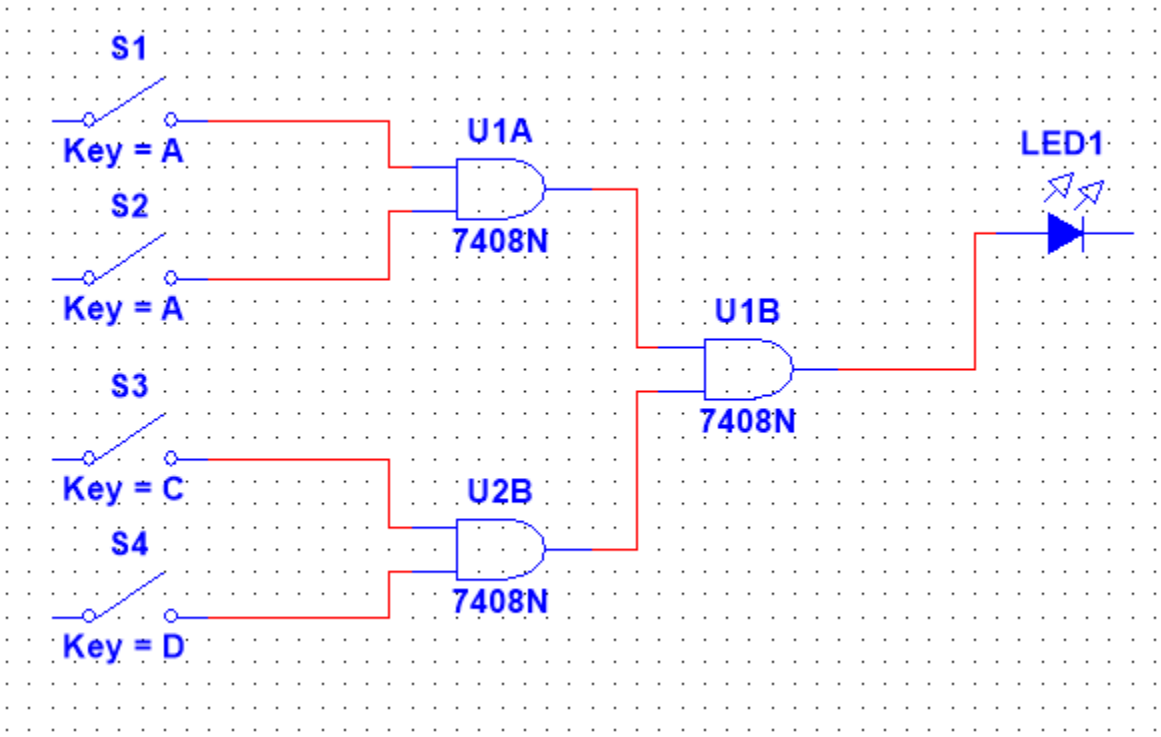

A	B	C	D	S
0	0	0	0	0
0	0	0	1	0
0	0	1	0	0

0	0	1	1	0
0	1	0	0	0
0	1	0	1	0
0	1	1	0	0
0	1	1	1	0
1	0	0	0	0
1	0	0	1	0
1	0	1	0	0
1	0	1	1	0
1	1	0	0	0
1	1	0	1	0
1	1	1	0	0
1	1	1	1	1

NOR 2 entradas

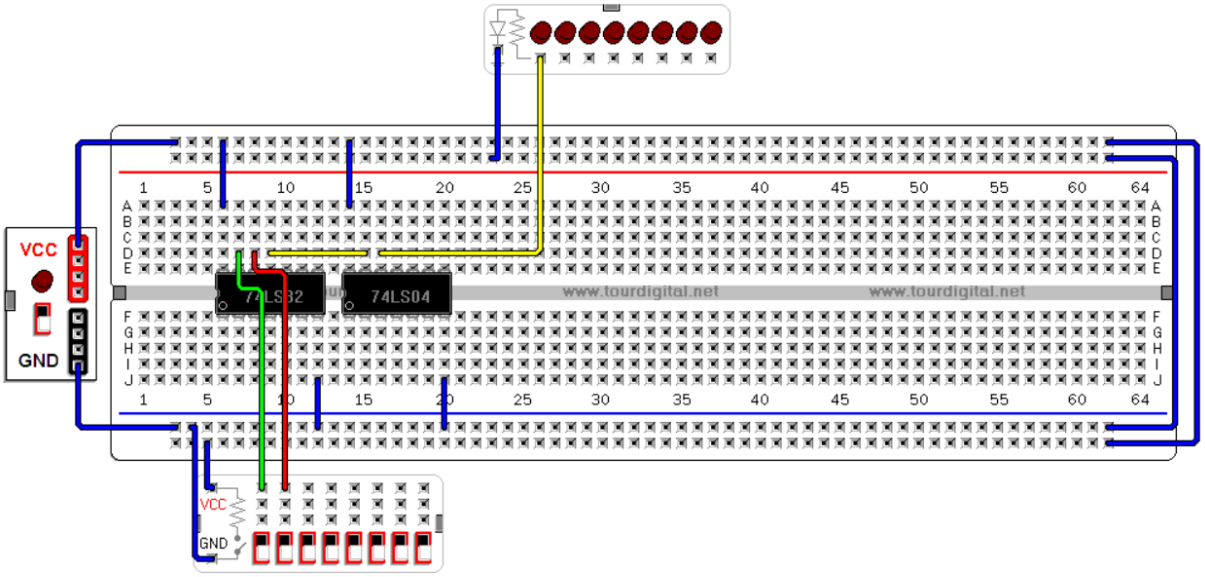

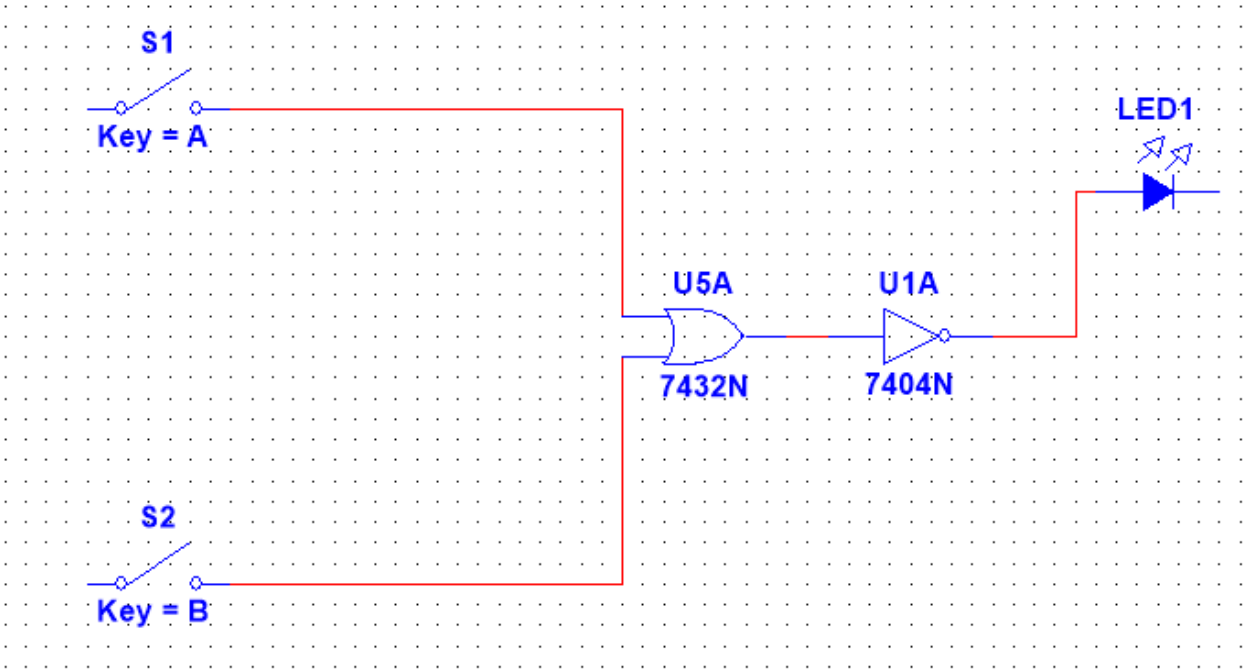

A	B	S
0	0	1
0	1	0
1	0	0
1	1	0

NOR 3 entradas

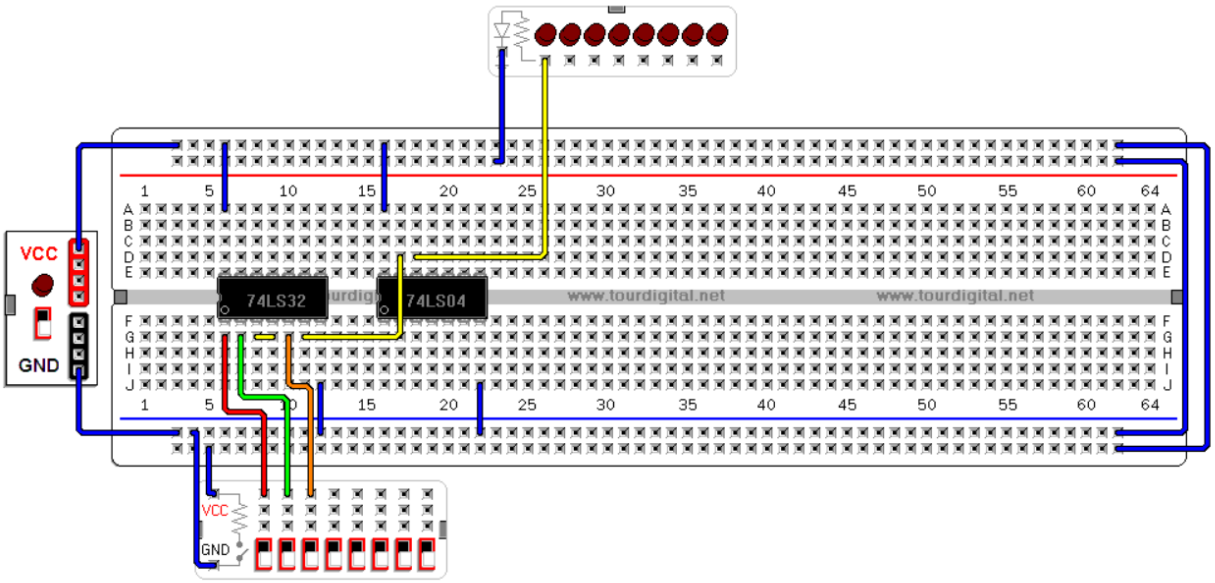

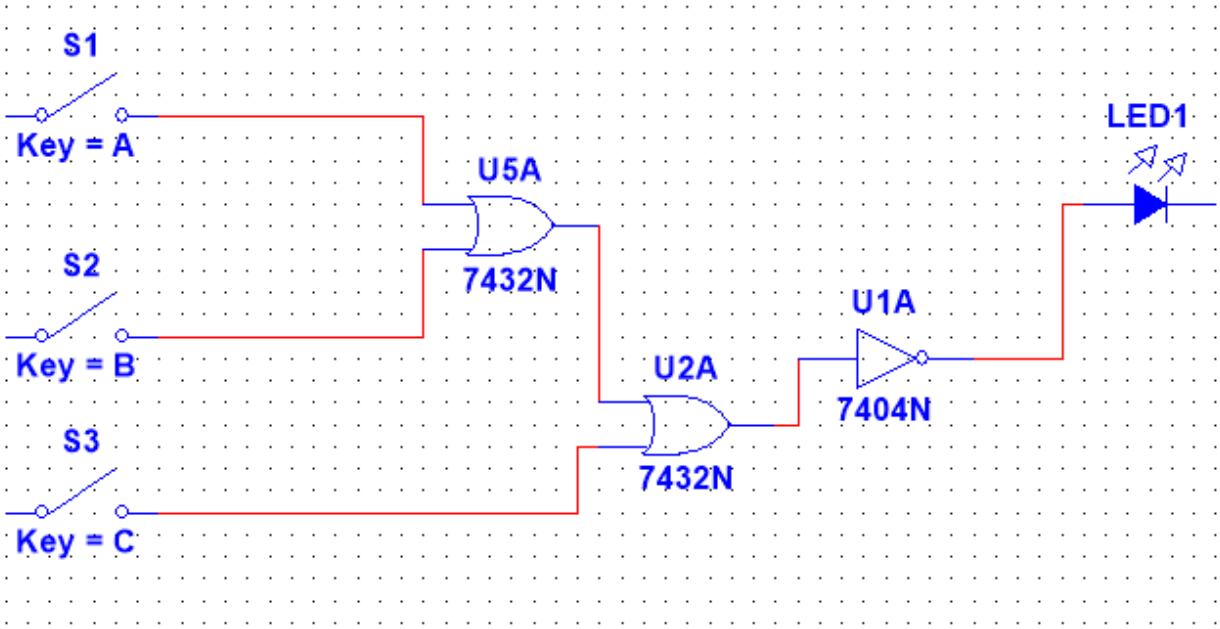

A	B	C	S
0	0	0	1
0	0	1	0
0	1	0	0
0	1	1	0
1	0	0	0
1	0	1	0
1	1	0	0
1	1	1	0

NOR 5 entradas

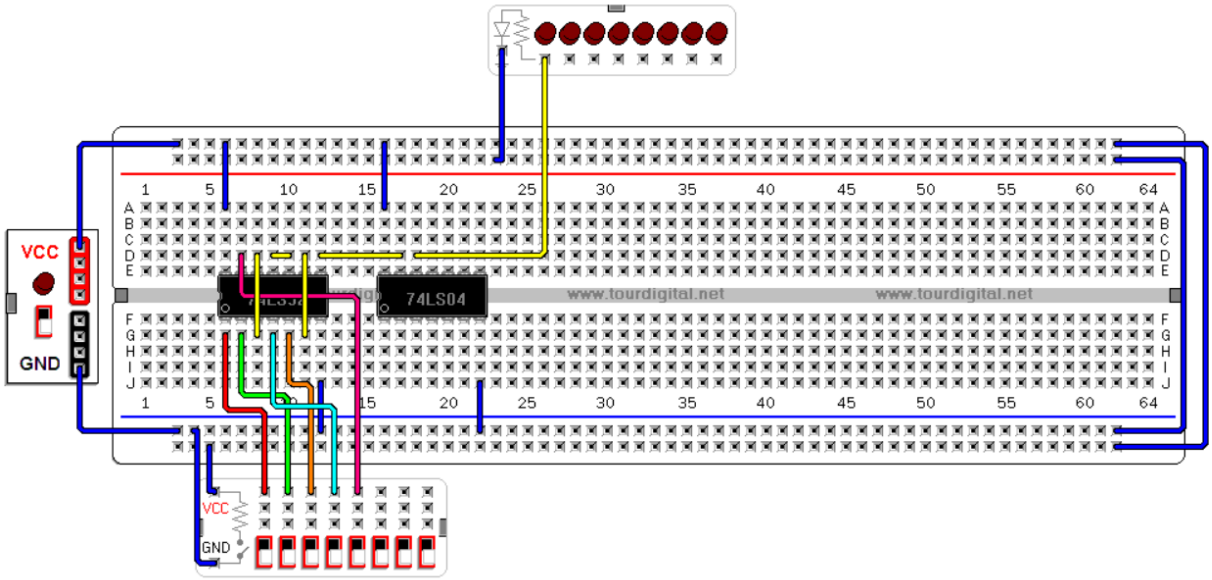

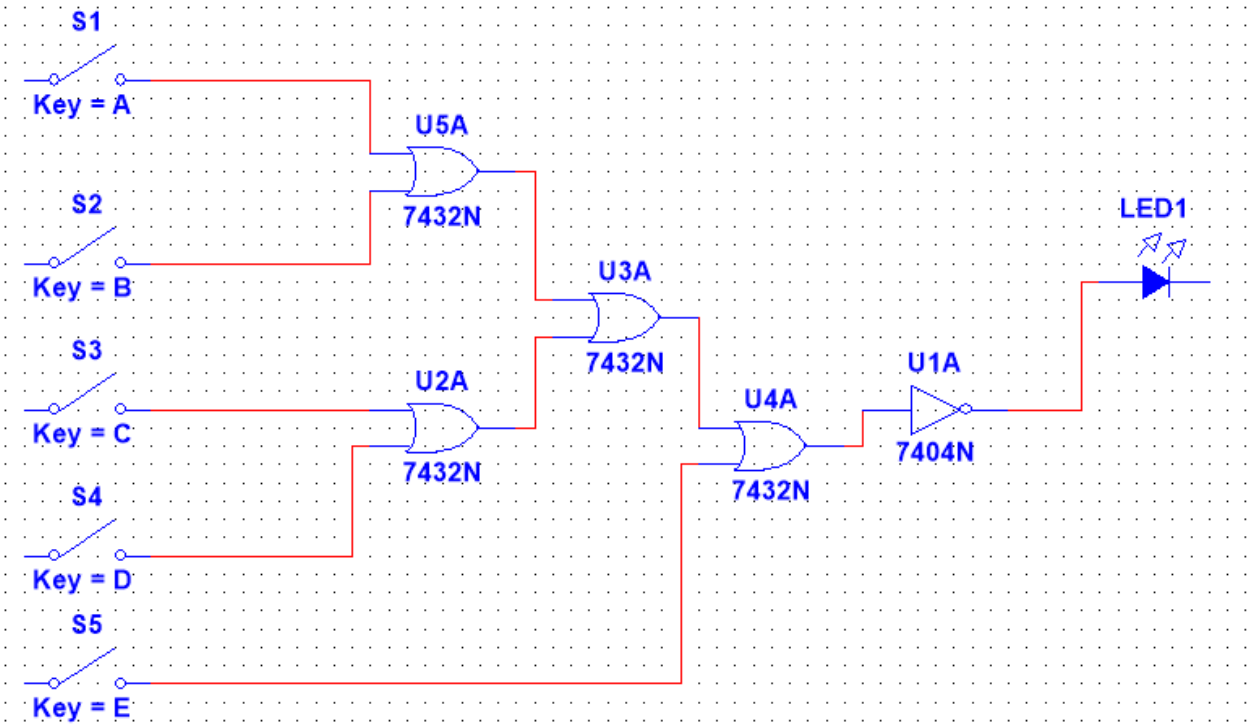

A	B	C	D	E	S
0	0	0	0	0	1
0	0	0	0	1	0

0	0	0	1	0	0
0	0	0	1	1	0
0	0	1	0	0	0
0	0	1	0	1	0
0	0	1	1	0	0
0	0	1	1	1	0
0	1	0	0	0	0
0	1	0	0	1	0
0	1	0	1	0	0
0	1	0	1	1	0
0	1	1	0	0	0
0	1	1	0	1	0
0	1	1	1	0	0
0	1	1	1	1	0
1	0	0	0	0	0
1	0	0	0	1	0
1	0	0	1	0	0
1	0	0	1	1	0
1	0	1	0	0	0
1	0	1	0	1	0
1	0	1	1	0	0
1	0	1	1	1	0
1	1	0	0	0	0
1	1	0	0	1	0
1	1	0	1	0	0
1	1	0	1	1	0
1	1	1	0	0	0
1	1	1	0	1	0
1	1	1	1	0	0
1	1	1	1	1	0

NAND 2

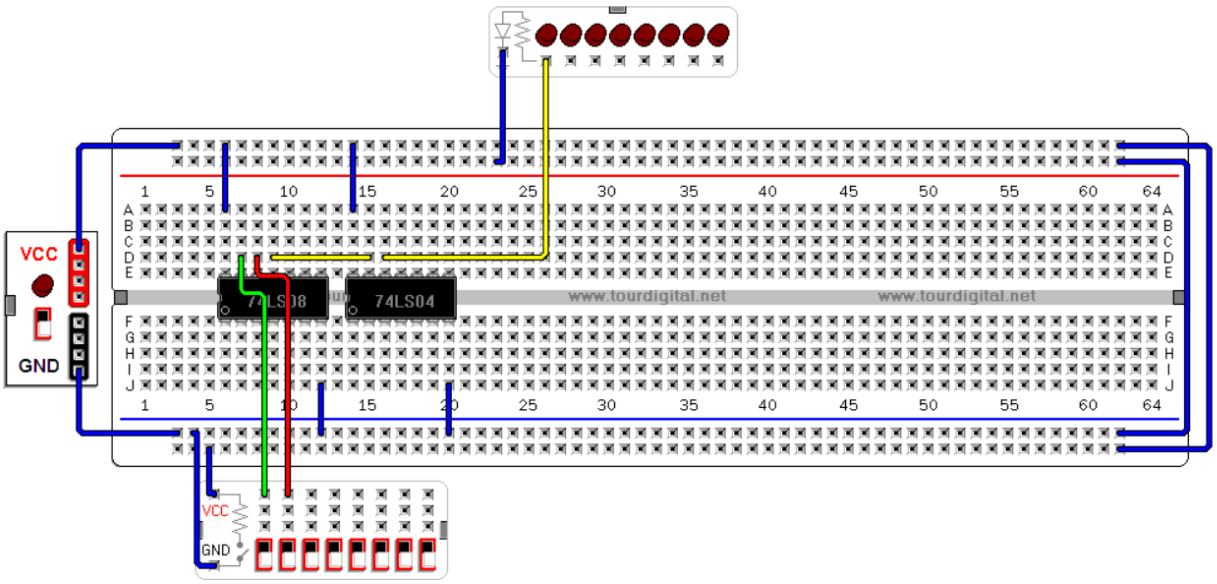

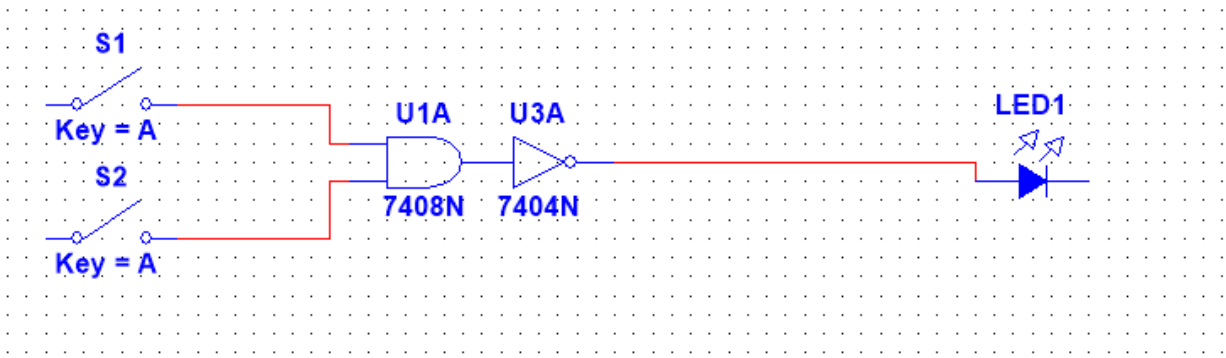

A	B	S
0	0	1
0	1	1
1	0	1
1	1	0

NAND 3

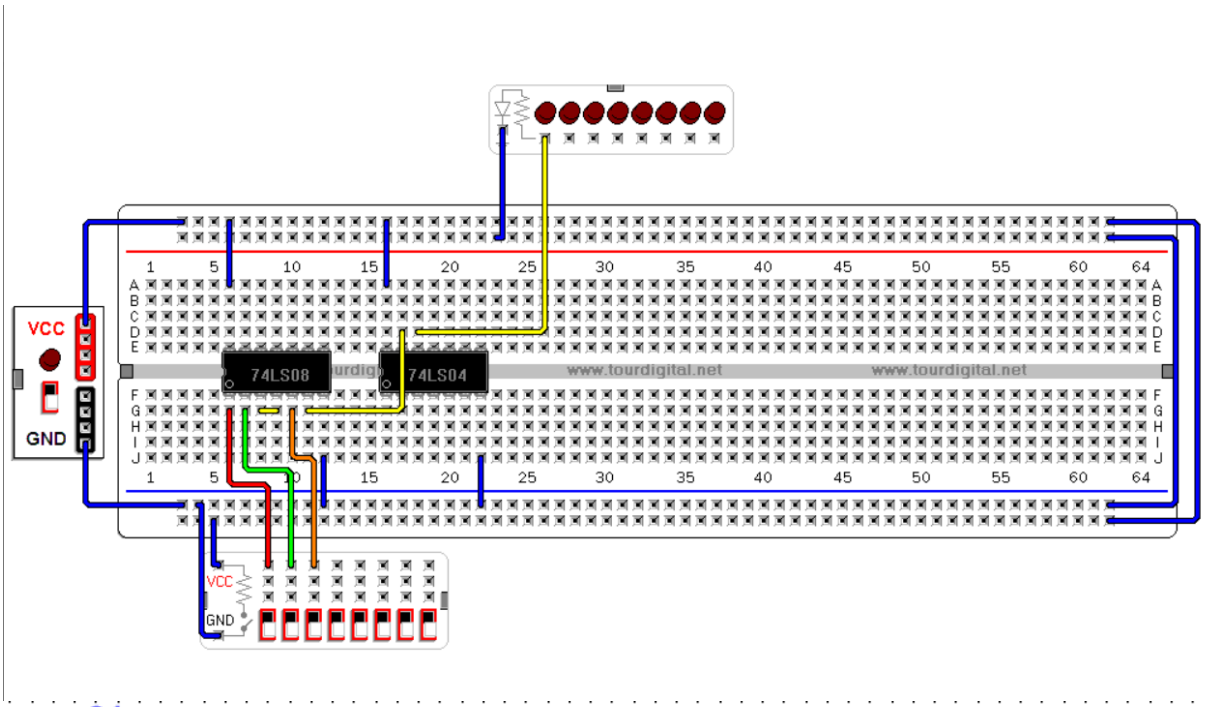

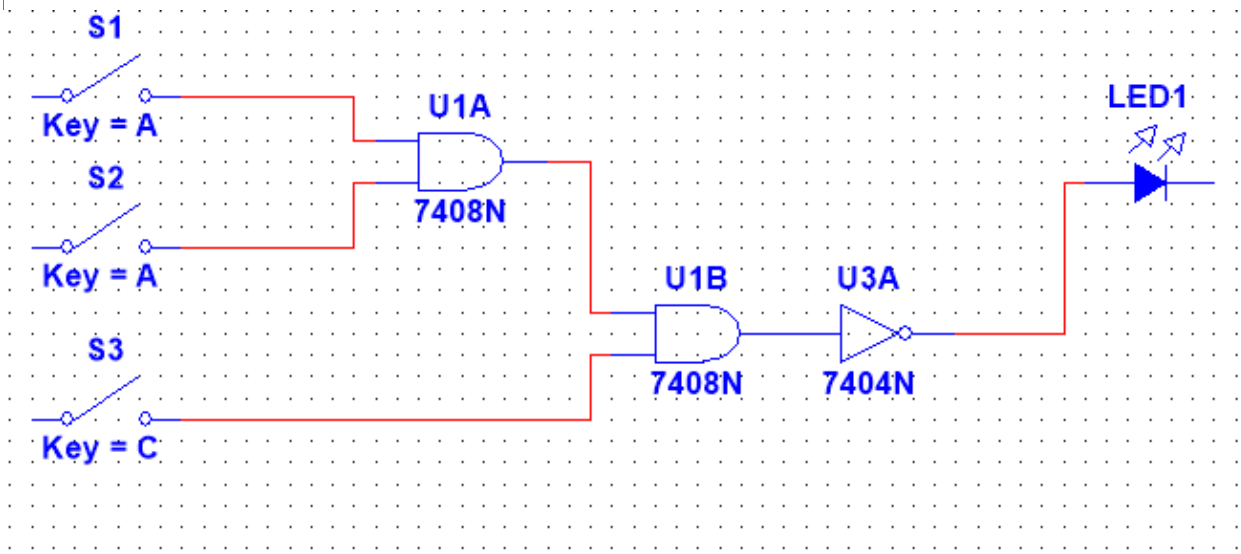

A	B	C	S
0	0	0	1
0	0	1	1
0	1	0	1
0	1	1	1
1	0	0	1
1	0	1	1
1	1	0	1
1	1	1	0

NAND 4

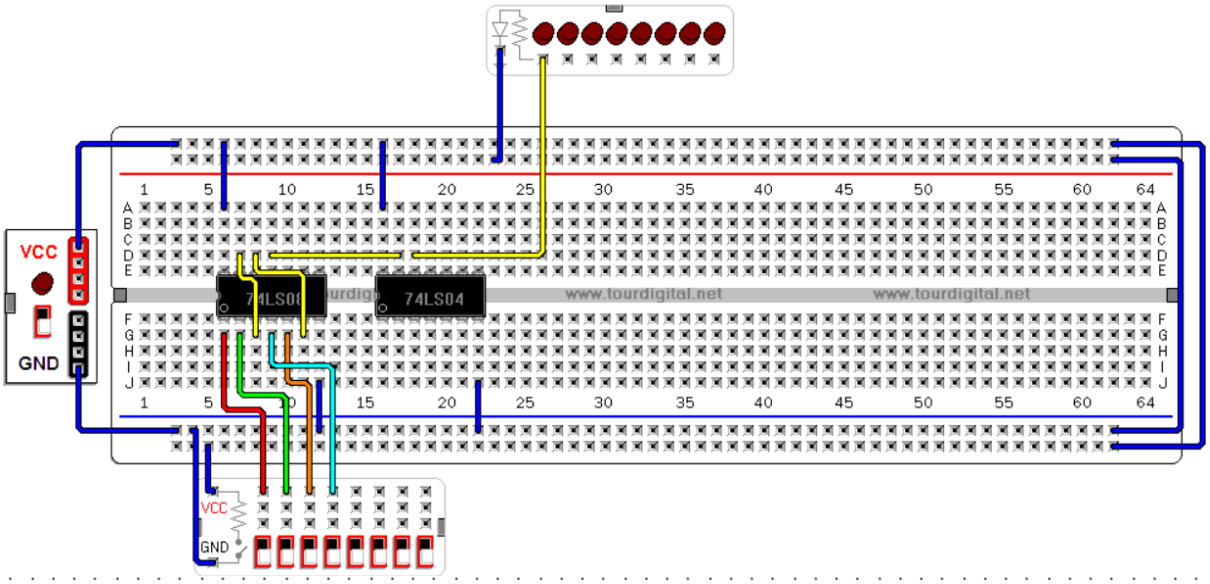

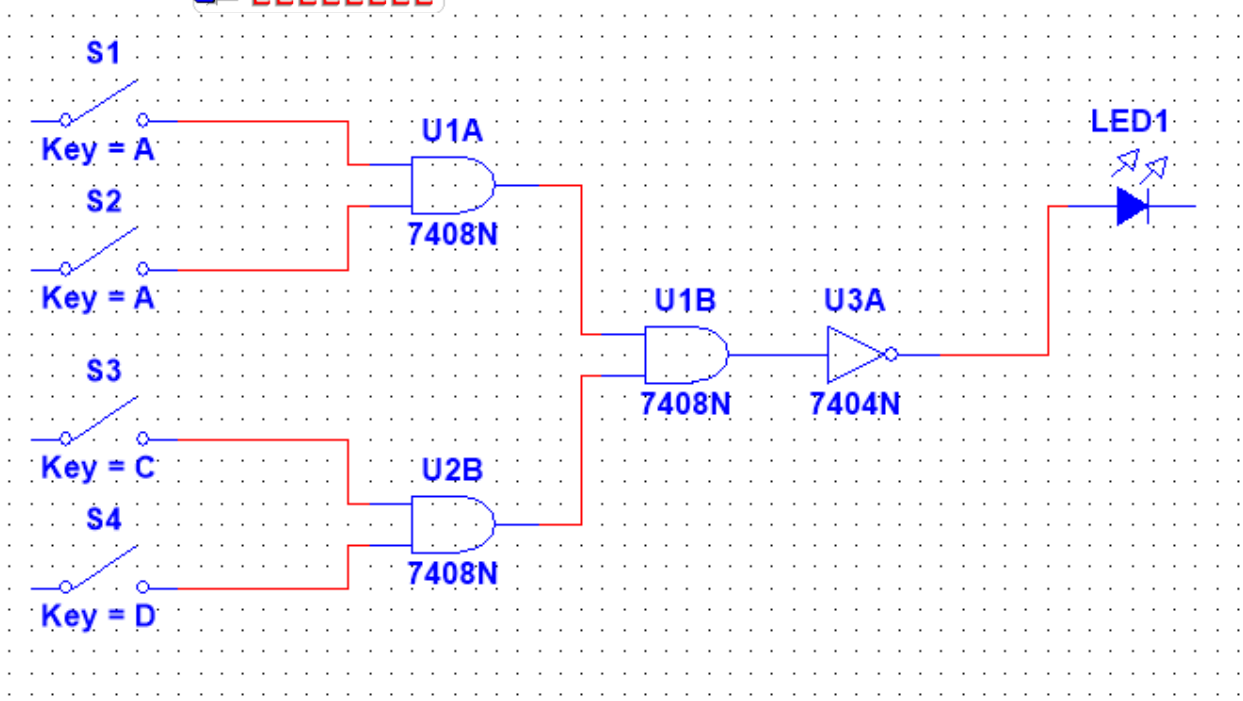

A	B	C	D	S
0	0	0	0	1
0	0	0	1	1
0	0	1	0	1
0	0	1	1	1
0	1	0	0	1

0	1	0	1	1
0	1	1	0	1
0	1	1	1	1
1	0	0	0	1
1	0	0	1	1
1	0	1	0	1
1	0	1	1	1
1	1	0	0	1
1	1	0	1	1
1	1	1	0	1
1	1	1	1	0

NAND 8

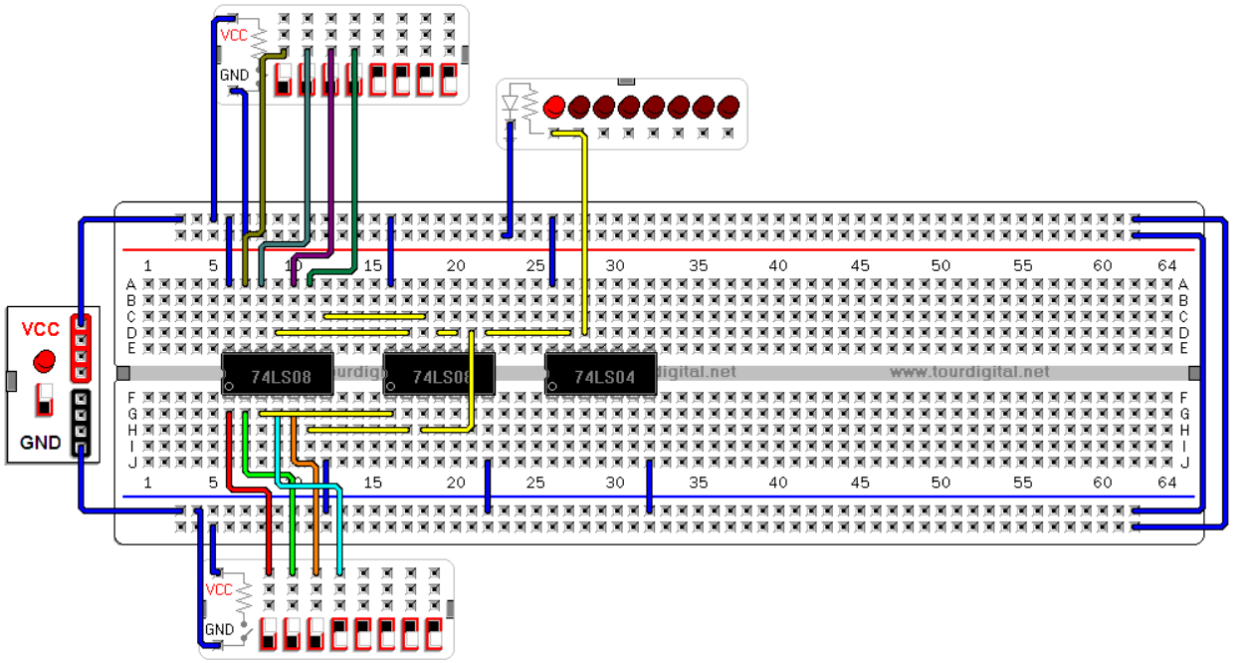
VCC
GND
74LS08
74LS08
74LS04
www.tourdigital.net

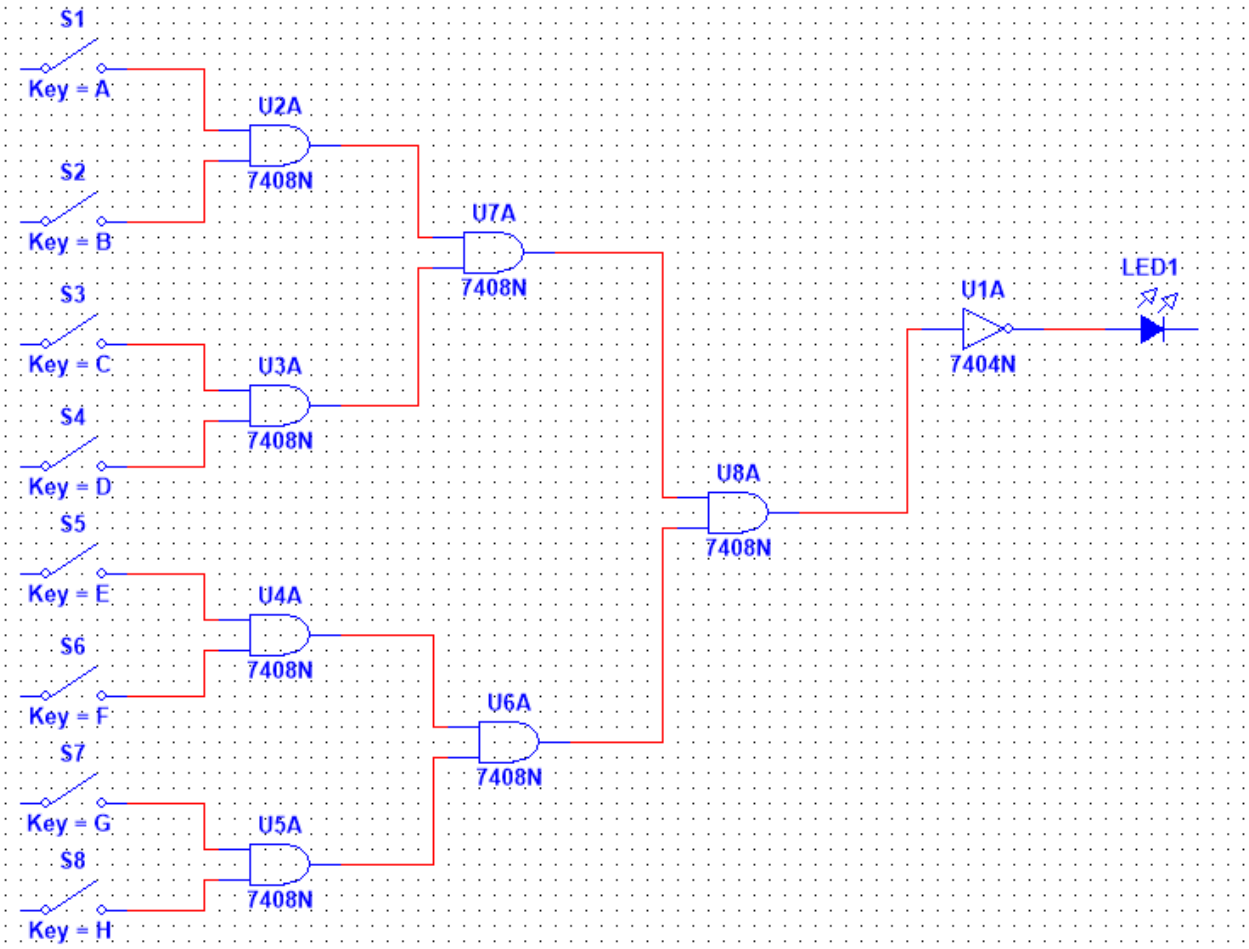
S1
Key = A
S2
Key = B
S3
Key = C
S4
Key = D
S5
Key = E
S6
Key = F
S7
Key = G
S8
Key = H
U2A
U3A
U4A
U5A
U6A
U7A
U8A
7408N
U1A
7404N
LED1

A	B	C	D	E	F	G	H	S
0	0	0	0	0	0	0	0	1
0	0	0	0	0	0	0	1	1
0	0	0	0	0	0	1	0	1
0	0	0	0	0	0	1	1	1
0	0	0	0	0	1	0	0	1
0	0	0	0	0	1	0	1	1
0	0	0	0	0	1	1	0	1
0	0	0	0	0	1	1	1	1
0	0	0	0	1	0	0	0	1
0	0	0	0	1	0	0	1	1
0	0	0	0	1	0	1	0	1
0	0	0	0	1	0	1	1	1
0	0	0	0	1	1	0	0	1
0	0	0	0	1	1	0	1	1
0	0	0	0	1	1	1	0	1
0	0	0	0	1	1	1	1	1
0	0	0	1	0	0	0	0	1
0	0	0	1	0	0	0	1	1
0	0	0	1	0	0	1	0	1
0	0	0	1	0	0	1	1	1
0	0	0	1	0	1	0	0	1
0	0	0	1	0	1	0	1	1
0	0	0	1	0	1	1	0	1
0	0	0	1	0	1	1	1	1
0	0	0	1	1	0	0	0	1
0	0	0	1	1	0	0	1	1
0	0	0	1	1	0	1	0	1
0	0	0	1	1	0	1	1	1
0	0	0	1	1	1	0	0	1
0	0	0	1	1	1	0	1	1
0	0	0	1	1	1	1	0	1
0	0	0	1	1	1	1	1	1
0	0	1	0	0	0	0	0	1
0	0	1	0	0	0	0	1	1
0	0	1	0	0	0	1	0	1
0	0	1	0	0	0	1	1	1
0	0	1	0	0	1	0	0	1
0	0	1	0	0	1	0	1	1
0	0	1	0	0	1	1	0	1
0	0	1	0	0	1	1	1	1

0	0	1	0	1	0	0	0	1
0	0	1	0	1	0	0	1	1
0	0	1	0	1	0	1	0	1
0	0	1	0	1	0	1	1	1
0	0	1	0	1	1	0	0	1
0	0	1	0	1	1	0	1	1
0	0	1	0	1	1	1	0	1
0	0	1	0	1	1	1	1	1
0	0	1	1	0	0	0	0	1
0	0	1	1	0	0	0	1	1
0	0	1	1	0	0	1	0	1
0	0	1	1	0	0	1	1	1
0	0	1	1	0	1	0	0	1
0	0	1	1	0	1	0	1	1
0	0	1	1	0	1	1	0	1
0	0	1	1	0	1	1	1	1
0	0	1	1	1	0	0	0	1
0	0	1	1	1	0	0	1	1
0	0	1	1	1	0	1	0	1
0	0	1	1	1	0	1	1	1
0	0	1	1	1	1	0	0	1
0	0	1	1	1	1	0	1	1
0	0	1	1	1	1	1	0	1
0	0	1	1	1	1	1	1	1
0	1	0	0	0	0	0	0	1
0	1	0	0	0	0	0	1	1
0	1	0	0	0	0	1	0	1
0	1	0	0	0	0	1	1	1
0	1	0	0	0	1	0	0	1
0	1	0	0	0	1	0	1	1
0	1	0	0	0	1	1	0	1
0	1	0	0	0	1	1	1	1
0	1	0	0	1	0	0	0	1
0	1	0	0	1	0	0	1	1
0	1	0	0	1	0	1	0	1
0	1	0	0	1	0	1	1	1
0	1	0	0	1	1	0	0	1
0	1	0	0	1	1	0	1	1
0	1	0	0	1	1	1	0	1
0	1	0	0	1	1	1	1	1
0	1	0	1	0	0	0	0	1

0	1	0	1	0	0	0	1	1
0	1	0	1	0	0	1	0	1
0	1	0	1	0	0	1	1	1
0	1	0	1	0	1	0	0	1
0	1	0	1	0	1	0	1	1
0	1	0	1	0	1	1	0	1
0	1	0	1	0	1	1	1	1
0	1	0	1	1	0	0	0	1
0	1	0	1	1	0	0	1	1
0	1	0	1	1	0	1	0	1
0	1	0	1	1	0	1	1	1
0	1	0	1	1	1	0	0	1
0	1	0	1	1	1	0	1	1
0	1	0	1	1	1	1	0	1
0	1	0	1	1	1	1	1	1
0	1	1	0	0	0	0	0	1
0	1	1	0	0	0	0	1	1
0	1	1	0	0	0	1	0	1
0	1	1	0	0	0	1	1	1
0	1	1	0	0	1	0	0	1
0	1	1	0	0	1	0	1	1
0	1	1	0	0	1	1	0	1
0	1	1	0	0	1	1	1	1
0	1	1	0	1	0	0	0	1
0	1	1	0	1	0	0	1	1
0	1	1	0	1	0	1	0	1
0	1	1	0	1	0	1	1	1
0	1	1	0	1	1	0	0	1
0	1	1	0	1	1	0	1	1
0	1	1	0	1	1	1	0	1
0	1	1	0	1	1	1	1	1
0	1	1	1	0	0	0	0	1
0	1	1	1	0	0	0	1	1
0	1	1	1	0	0	1	0	1
0	1	1	1	0	0	1	1	1
0	1	1	1	0	1	0	0	1
0	1	1	1	0	1	0	1	1
0	1	1	1	0	1	1	0	1
0	1	1	1	0	1	1	1	1
0	1	1	1	1	0	0	0	1
0	1	1	1	1	0	0	1	1

0	1	1	1	1	0	1	0	1
0	1	1	1	1	0	1	1	1
0	1	1	1	1	1	0	0	1
0	1	1	1	1	1	0	1	1
0	1	1	1	1	1	1	0	1
0	1	1	1	1	1	1	1	1
1	0	0	0	0	0	0	0	1
1	0	0	0	0	0	0	1	1
1	0	0	0	0	0	1	0	1
1	0	0	0	0	0	1	1	1
1	0	0	0	0	1	0	0	1
1	0	0	0	0	1	0	1	1
1	0	0	0	0	1	1	0	1
1	0	0	0	0	1	1	1	1
1	0	0	0	1	0	0	0	1
1	0	0	0	1	0	0	1	1
1	0	0	0	1	0	1	0	1
1	0	0	0	1	0	1	1	1
1	0	0	0	1	1	0	0	1
1	0	0	0	1	1	0	1	1
1	0	0	0	1	1	1	0	1
1	0	0	0	1	1	1	1	1
1	0	0	1	0	0	0	0	1
1	0	0	1	0	0	0	1	1
1	0	0	1	0	0	1	0	1
1	0	0	1	0	0	1	1	1
1	0	0	1	0	1	0	0	1
1	0	0	1	0	1	0	1	1
1	0	0	1	0	1	1	0	1
1	0	0	1	0	1	1	1	1
1	0	0	1	1	0	0	0	1
1	0	0	1	1	0	0	1	1
1	0	0	1	1	0	1	0	1
1	0	0	1	1	0	1	1	1
1	0	0	1	1	1	0	0	1
1	0	0	1	1	1	0	1	1
1	0	0	1	1	1	1	0	1
1	0	0	1	1	1	1	1	1
1	0	1	0	0	0	0	0	1
1	0	1	0	0	0	0	1	1
1	0	1	0	0	0	1	0	1

1	0	1	0	0	0	1	1	1
1	0	1	0	0	1	0	0	1
1	0	1	0	0	1	0	1	1
1	0	1	0	0	1	1	0	1
1	0	1	0	0	1	1	1	1
1	0	1	0	1	0	0	0	1
1	0	1	0	1	0	0	1	1
1	0	1	0	1	0	1	0	1
1	0	1	0	1	0	1	1	1
1	0	1	0	1	1	0	0	1
1	0	1	0	1	1	0	1	1
1	0	1	0	1	1	1	0	1
1	0	1	0	1	1	1	1	1
1	0	1	1	0	0	0	0	1
1	0	1	1	0	0	0	1	1
1	0	1	1	0	0	1	0	1
1	0	1	1	0	0	1	1	1
1	0	1	1	0	1	0	0	1
1	0	1	1	0	1	0	1	1
1	0	1	1	0	1	1	0	1
1	0	1	1	0	1	1	1	1
1	0	1	1	1	0	0	0	1
1	0	1	1	1	0	0	1	1
1	0	1	1	1	0	1	0	1
1	0	1	1	1	0	1	1	1
1	0	1	1	1	1	0	0	1
1	0	1	1	1	1	0	1	1
1	0	1	1	1	1	1	0	1
1	0	1	1	1	1	1	1	1
1	1	0	0	0	0	0	0	1
1	1	0	0	0	0	0	1	1
1	1	0	0	0	0	1	0	1
1	1	0	0	0	0	1	1	1
1	1	0	0	0	1	0	0	1
1	1	0	0	0	1	0	1	1
1	1	0	0	0	1	1	0	1
1	1	0	0	0	1	1	1	1
1	1	0	0	1	0	0	0	1
1	1	0	0	1	0	0	1	1
1	1	0	0	1	0	1	0	1
1	1	0	0	1	0	1	1	1

1	1	0	0	1	1	0	0	1
1	1	0	0	1	1	0	1	1
1	1	0	0	1	1	1	0	1
1	1	0	0	1	1	1	1	1
1	1	0	1	0	0	0	0	1
1	1	0	1	0	0	0	1	1
1	1	0	1	0	0	1	0	1
1	1	0	1	0	0	1	1	1
1	1	0	1	0	1	0	0	1
1	1	0	1	0	1	0	1	1
1	1	0	1	0	1	1	0	1
1	1	0	1	0	1	1	1	1
1	1	0	1	1	0	0	0	1
1	1	0	1	1	0	0	1	1
1	1	0	1	1	0	1	0	1
1	1	0	1	1	0	1	1	1
1	1	0	1	1	1	0	0	1
1	1	0	1	1	1	0	1	1
1	1	0	1	1	1	1	0	1
1	1	0	1	1	1	1	1	1
1	1	1	0	0	1	0	0	1
1	1	1	0	0	0	0	1	1
1	1	1	0	0	0	1	0	1
1	1	1	0	0	0	1	1	1
1	1	1	0	0	0	0	0	1
1	1	1	0	0	1	0	1	1
1	1	1	0	0	1	1	0	1
1	1	1	0	0	1	1	1	1
1	1	1	0	1	1	0	0	1
1	1	1	0	1	0	0	1	1
1	1	1	0	1	0	1	0	1
1	1	1	0	1	0	1	1	1
1	1	1	0	1	0	0	0	1
1	1	1	0	1	1	0	1	1
1	1	1	0	1	1	1	0	1
1	1	1	0	1	1	1	1	1
1	1	1	1	0	1	0	0	1
1	1	1	1	0	0	0	1	1
1	1	1	1	0	0	1	0	1
1	1	1	1	0	0	1	1	1
1	1	1	1	0	0	0	0	1

1	1	1	1	0	1	0	1	1
1	1	1	1	0	1	1	0	1
1	1	1	1	0	1	1	1	1
1	1	1	1	1	1	0	0	1
1	1	1	1	1	0	0	1	1
1	1	1	1	1	0	1	0	1
1	1	1	1	1	0	1	1	1
1	1	1	1	1	0	0	0	1
1	1	1	1	1	1	0	1	1
1	1	1	1	1	1	1	0	1
1	1	1	1	1	1	1	1	0

NAND 13

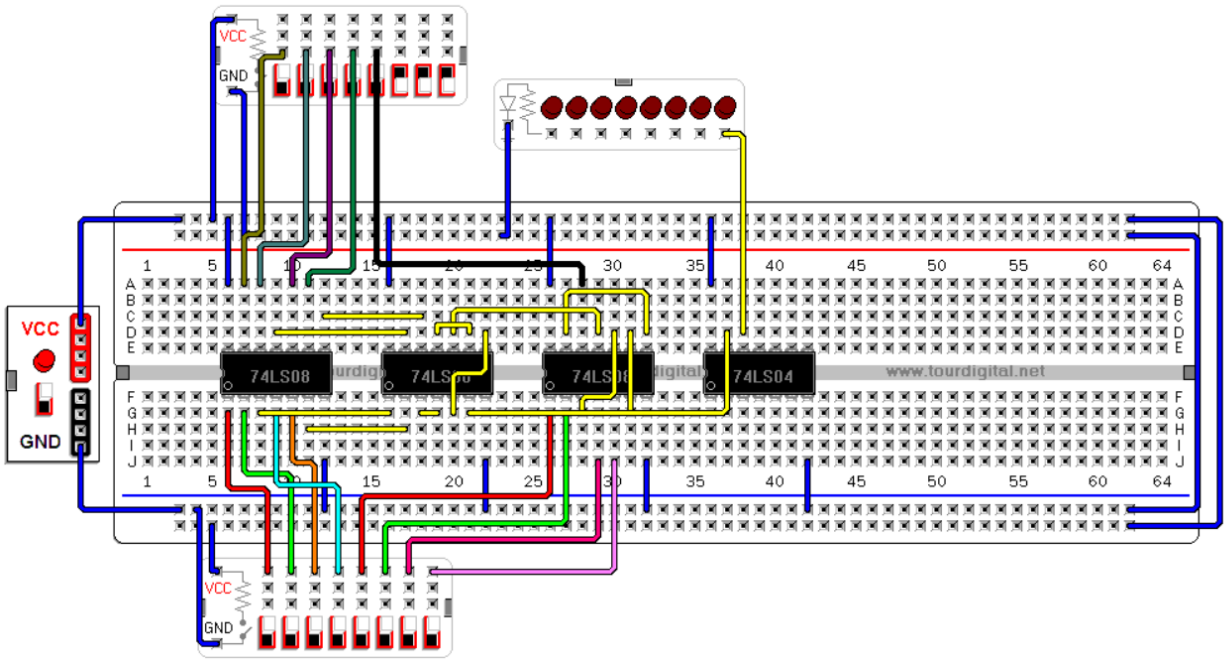
VCC
GND
74LS08
74LS04
www.tourdigital.net
VCC
GND

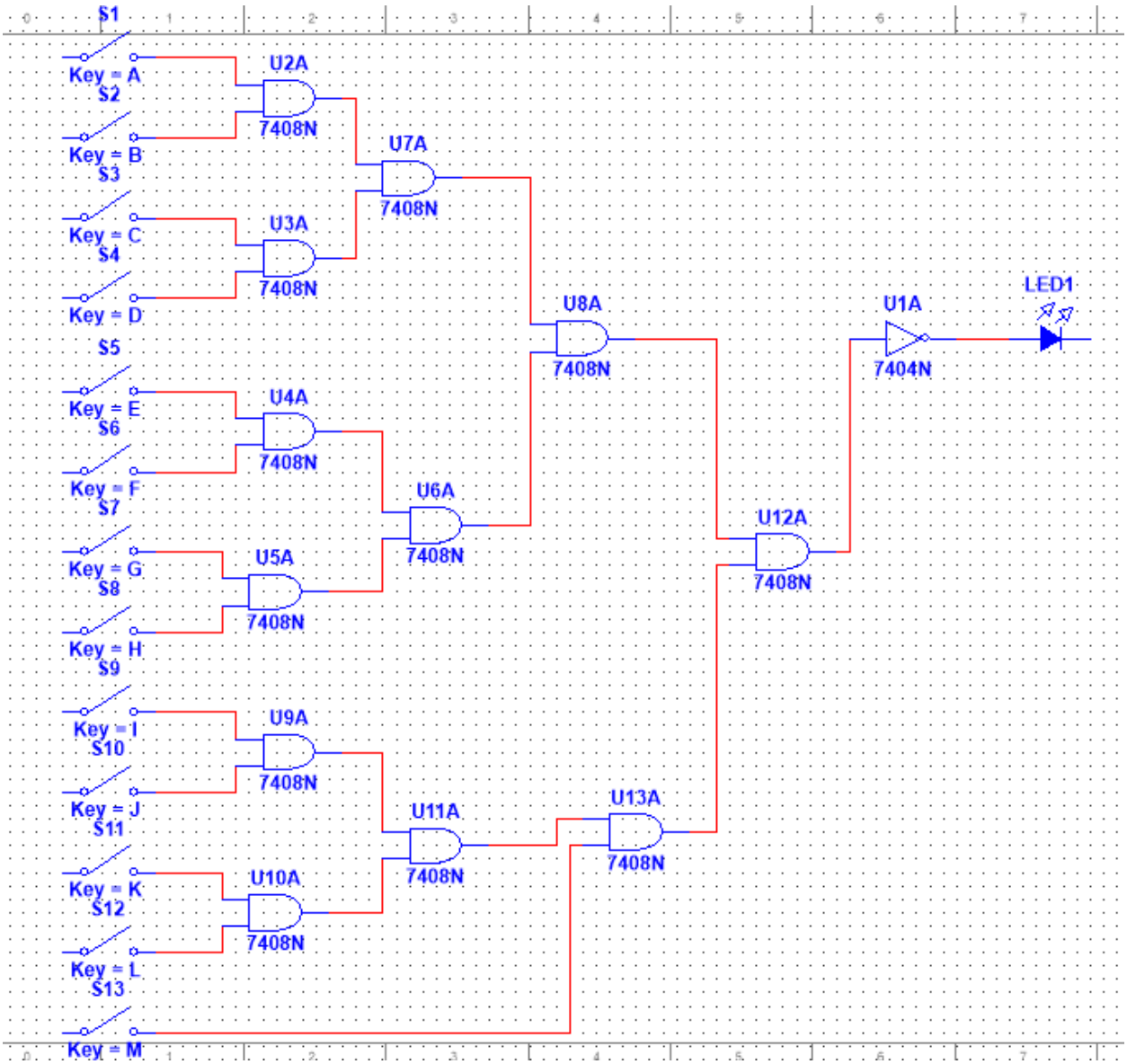

A	B	C	D	E	F	G	H	I	J	K	L	M	S
0	0	0	0	0	0	0	0	0	0	0	0	0	1
0	0	0	0	0	0	0	0	0	0	0	0	1	1
0	0	0	0	0	0	0	0	0	0	0	1	0	1
0	0	0	0	0	0	0	0	0	0	0	1	1	1
0	0	0	0	0	0	0	0	0	0	1	0	0	1
0	0	0	0	0	0	0	0	0	0	1	0	1	1
0	0	0	0	0	0	0	0	0	0	1	1	0	1
0	0	0	0	0	0	0	0	0	0	1	1	1	1
0	0	0	0	0	0	0	0	0	1	0	0	0	1
0	0	0	0	0	0	0	0	0	1	0	0	1	1
0	0	0	0	0	0	0	0	0	1	0	1	0	1
0	0	0	0	0	0	0	0	0	1	0	1	1	1
0	0	0	0	0	0	0	0	0	1	1	0	0	1

0	0	0	0	0	0	0	0	0	1	1	0	1	1
0	0	0	0	0	0	0	0	0	1	1	1	0	1
0	0	0	0	0	0	0	0	0	1	1	1	1	1
0	0	0	0	0	0	0	0	1	0	0	0	0	1
0	0	0	0	0	0	0	0	1	0	0	0	1	1
0	0	0	0	0	0	0	0	1	0	0	1	0	1
0	0	0	0	0	0	0	0	1	0	0	1	1	1
0	0	0	0	0	0	0	0	1	0	1	0	0	1
0	0	0	0	0	0	0	0	1	0	1	0	1	1
0	0	0	0	0	0	0	0	1	0	1	1	0	1
0	0	0	0	0	0	0	0	1	0	1	1	1	1
0	0	0	0	0	0	0	0	1	1	0	0	0	1
0	0	0	0	0	0	0	0	1	1	0	0	1	1
0	0	0	0	0	0	0	0	1	1	0	1	0	1
0	0	0	0	0	0	0	0	1	1	0	1	1	1
0	0	0	0	0	0	0	0	1	1	1	0	0	1
0	0	0	0	0	0	0	0	1	1	1	0	1	1
0	0	0	0	0	0	0	0	1	1	1	1	0	1
0	0	0	0	0	0	0	0	1	1	1	1	1	1
0	0	0	0	0	0	0	1	0	0	0	0	0	1
0	0	0	0	0	0	0	1	0	0	0	0	1	1
0	0	0	0	0	0	0	1	0	0	0	1	0	1
0	0	0	0	0	0	0	1	0	0	0	1	1	1
0	0	0	0	0	0	0	1	0	0	1	0	0	1
0	0	0	0	0	0	0	1	0	0	1	0	1	1
0	0	0	0	0	0	0	1	0	0	1	1	0	1
0	0	0	0	0	0	0	1	0	0	1	1	1	1
0	0	0	0	0	0	0	1	0	1	0	0	0	1
0	0	0	0	0	0	0	1	0	1	0	0	1	1
0	0	0	0	0	0	0	1	0	1	0	1	0	1
0	0	0	0	0	0	0	1	0	1	0	1	1	1
0	0	0	0	0	0	0	1	0	1	1	0	0	1
0	0	0	0	0	0	0	1	0	1	1	0	1	1
0	0	0	0	0	0	0	1	0	1	1	1	0	1
0	0	0	0	0	0	0	1	0	1	1	1	1	1
0	0	0	0	0	0	0	1	1	0	0	0	0	1
0	0	0	0	0	0	0	1	1	0	0	0	1	1
0	0	0	0	0	0	0	1	1	0	0	1	0	1
0	0	0	0	0	0	0	1	1	0	0	1	1	1
0	0	0	0	0	0	0	1	1	0	1	0	0	1
0	0	0	0	0	0	0	1	1	0	1	0	1	1
0	0	0	0	0	0	0	1	1	0	1	1	0	1
0	0	0	0	0	0	0	1	1	0	1	1	1	1
0	0	0	0	0	0	0	1	1	1	0	0	0	1
0	0	0	0	0	0	0	1	1	1	0	0	1	1
0	0	0	0	0	0	0	1	1	1	0	1	0	1

0	0	0	0	0	0	0	1	1	1	0	1	1	1
0	0	0	0	0	0	0	1	1	1	1	0	0	1
0	0	0	0	0	0	0	1	1	1	1	0	1	1
0	0	0	0	0	0	0	1	1	1	1	1	0	1
0	0	0	0	0	0	0	1	1	1	1	1	1	1
0	0	0	0	0	0	1	0	0	0	0	0	0	1
0	0	0	0	0	0	1	0	0	0	0	0	1	1
0	0	0	0	0	0	1	0	0	0	0	1	0	1
0	0	0	0	0	0	1	0	0	0	0	1	1	1
0	0	0	0	0	0	1	0	0	0	1	0	0	1
0	0	0	0	0	0	1	0	0	0	1	0	1	1
0	0	0	0	0	0	1	0	0	0	1	1	0	1
0	0	0	0	0	0	1	0	0	0	1	1	1	1
0	0	0	0	0	0	1	0	0	1	0	0	0	1
0	0	0	0	0	0	1	0	0	1	0	0	1	1
0	0	0	0	0	0	1	0	0	1	0	1	0	1
0	0	0	0	0	0	1	0	0	1	0	1	1	1
0	0	0	0	0	0	1	0	0	1	1	0	0	1
0	0	0	0	0	0	1	0	0	1	1	0	1	1
0	0	0	0	0	0	1	0	0	1	1	1	0	1
0	0	0	0	0	0	1	0	0	1	1	1	1	1
0	0	0	0	0	0	1	0	1	0	0	0	0	1
0	0	0	0	0	0	1	0	1	0	0	0	1	1
0	0	0	0	0	0	1	0	1	0	0	1	0	1
0	0	0	0	0	0	1	0	1	0	0	1	1	1
0	0	0	0	0	0	1	0	1	0	1	0	0	1
0	0	0	0	0	0	1	0	1	0	1	0	1	1
0	0	0	0	0	0	1	0	1	0	1	1	0	1
0	0	0	0	0	0	1	0	1	0	1	1	1	1
0	0	0	0	0	0	1	0	1	1	0	0	0	1
0	0	0	0	0	0	1	0	1	1	0	0	1	1
0	0	0	0	0	0	1	0	1	1	0	1	0	1
0	0	0	0	0	0	1	0	1	1	0	1	1	1
0	0	0	0	0	0	1	0	1	1	1	0	0	1
0	0	0	0	0	0	1	0	1	1	1	0	1	1
0	0	0	0	0	0	1	0	1	1	1	1	0	1
0	0	0	0	0	0	1	0	1	1	1	1	1	1
0	0	0	0	0	0	1	1	0	0	0	0	0	1
0	0	0	0	0	0	1	1	0	0	0	0	1	1
0	0	0	0	0	0	1	1	0	0	0	1	0	1
0	0	0	0	0	0	1	1	0	0	0	1	1	1
0	0	0	0	0	0	1	1	0	0	1	0	0	1
0	0	0	0	0	0	1	1	0	0	1	0	1	1
0	0	0	0	0	0	1	1	0	0	1	1	0	1
0	0	0	0	0	0	1	1	0	0	1	1	1	1
0	0	0	0	0	0	1	1	0	1	0	0	0	1

0	0	0	0	0	0	1	1	0	1	0	0	1	1
0	0	0	0	0	0	1	1	0	1	0	1	0	1
0	0	0	0	0	0	1	1	0	1	0	1	1	1
0	0	0	0	0	0	1	1	0	1	1	0	0	1
0	0	0	0	0	0	1	1	0	1	1	0	1	1
0	0	0	0	0	0	1	1	0	1	1	1	0	1
0	0	0	0	0	0	1	1	0	1	1	1	1	1
0	0	0	0	0	0	1	1	1	0	0	0	0	1
0	0	0	0	0	0	1	1	1	0	0	0	1	1
0	0	0	0	0	0	1	1	1	0	0	1	0	1
0	0	0	0	0	0	1	1	1	0	0	1	1	1
0	0	0	0	0	0	1	1	1	0	1	0	0	1
0	0	0	0	0	0	1	1	1	0	1	0	1	1
0	0	0	0	0	0	1	1	1	0	1	1	0	1
0	0	0	0	0	0	1	1	1	0	1	1	1	1
0	0	0	0	0	0	1	1	1	1	0	0	0	1
0	0	0	0	0	0	1	1	1	1	0	0	1	1
0	0	0	0	0	0	1	1	1	1	0	1	0	1
0	0	0	0	0	0	1	1	1	1	0	1	1	1
0	0	0	0	0	0	1	1	1	1	1	0	0	1
0	0	0	0	0	0	1	1	1	1	1	0	1	1
0	0	0	0	0	0	1	1	1	1	1	1	0	1
0	0	0	0	0	0	1	1	1	1	1	1	1	1
0	0	0	0	0	1	0	0	0	0	0	0	0	1
0	0	0	0	0	1	0	0	0	0	0	0	1	1
0	0	0	0	0	1	0	0	0	0	0	1	0	1
0	0	0	0	0	1	0	0	0	0	0	1	1	1
0	0	0	0	0	1	0	0	0	0	1	0	0	1
0	0	0	0	0	1	0	0	0	0	1	0	1	1
0	0	0	0	0	1	0	0	0	0	1	1	0	1
0	0	0	0	0	1	0	0	0	0	1	1	1	1
0	0	0	0	0	1	0	0	0	1	0	0	0	1
0	0	0	0	0	1	0	0	0	1	0	0	1	1
0	0	0	0	0	1	0	0	0	1	0	1	0	1
0	0	0	0	0	1	0	0	0	1	0	1	1	1
0	0	0	0	0	1	0	0	0	1	1	0	0	1
0	0	0	0	0	1	0	0	0	1	1	0	1	1
0	0	0	0	0	1	0	0	0	1	1	1	0	1
0	0	0	0	0	1	0	0	0	1	1	1	1	1
0	0	0	0	0	1	0	0	1	0	0	0	0	1
0	0	0	0	0	1	0	0	1	0	0	0	1	1
0	0	0	0	0	1	0	0	1	0	0	1	0	1
0	0	0	0	0	1	0	0	1	0	0	1	1	1
0	0	0	0	0	1	0	0	1	0	1	0	0	1
0	0	0	0	0	1	0	0	1	0	1	0	1	1
0	0	0	0	0	1	0	0	1	0	1	1	0	1

0	0	0	0	0	1	0	0	1	0	1	1	1	1
0	0	0	0	0	1	0	0	1	1	0	0	0	1
0	0	0	0	0	1	0	0	1	1	0	0	1	1
0	0	0	0	0	1	0	0	1	1	0	1	0	1
0	0	0	0	0	1	0	0	1	1	0	1	1	1
0	0	0	0	0	1	0	0	1	1	1	0	0	1
0	0	0	0	0	1	0	0	1	1	1	0	1	1
0	0	0	0	0	1	0	0	1	1	1	1	0	1
0	0	0	0	0	1	0	0	1	1	1	1	1	1
0	0	0	0	0	1	0	1	0	0	0	0	0	1
0	0	0	0	0	1	0	1	0	0	0	0	1	1
0	0	0	0	0	1	0	1	0	0	0	1	0	1
0	0	0	0	0	1	0	1	0	0	0	1	1	1
0	0	0	0	0	1	0	1	0	0	1	0	0	1
0	0	0	0	0	1	0	1	0	0	1	0	1	1
0	0	0	0	0	1	0	1	0	0	1	1	0	1
0	0	0	0	0	1	0	1	0	0	1	1	1	1
0	0	0	0	0	1	0	1	0	1	0	0	0	1
0	0	0	0	0	1	0	1	0	1	0	0	1	1
0	0	0	0	0	1	0	1	0	1	0	1	0	1
0	0	0	0	0	1	0	1	0	1	0	1	1	1
0	0	0	0	0	1	0	1	0	1	1	0	0	1
0	0	0	0	0	1	0	1	0	1	1	0	1	1
0	0	0	0	0	1	0	1	0	1	1	1	0	1
0	0	0	0	0	1	0	1	0	1	1	1	1	1
0	0	0	0	0	1	0	1	1	0	0	0	0	1
0	0	0	0	0	1	0	1	1	0	0	0	1	1
0	0	0	0	0	1	0	1	1	0	0	1	0	1
0	0	0	0	0	1	0	1	1	0	0	1	1	1
0	0	0	0	0	1	0	1	1	0	1	0	0	1
0	0	0	0	0	1	0	1	1	0	1	0	1	1
0	0	0	0	0	1	0	1	1	0	1	1	0	1
0	0	0	0	0	1	0	1	1	0	1	1	1	1
0	0	0	0	0	1	0	1	1	1	0	0	0	1
0	0	0	0	0	1	0	1	1	1	0	0	1	1
0	0	0	0	0	1	0	1	1	1	0	1	0	1
0	0	0	0	0	1	0	1	1	1	0	1	1	1
0	0	0	0	0	1	0	1	1	1	1	0	0	1
0	0	0	0	0	1	0	1	1	1	1	0	1	1
0	0	0	0	0	1	0	1	1	1	1	1	0	1
0	0	0	0	0	1	0	1	1	1	1	1	1	1
0	0	0	0	0	1	1	0	0	0	0	0	0	1
0	0	0	0	0	1	1	0	0	0	0	0	1	1
0	0	0	0	0	1	1	0	0	0	0	1	0	1
0	0	0	0	0	1	1	0	0	0	0	1	1	1
0	0	0	0	0	1	1	0	0	0	1	0	0	1

0	0	0	0	0	1	1	0	0	0	1	0	1	1
0	0	0	0	0	1	1	0	0	0	1	1	0	1
0	0	0	0	0	1	1	0	0	0	1	1	1	1
0	0	0	0	0	1	1	0	0	1	0	0	0	1
0	0	0	0	0	1	1	0	0	1	0	0	1	1
0	0	0	0	0	1	1	0	0	1	0	1	0	1
0	0	0	0	0	1	1	0	0	1	0	1	1	1
0	0	0	0	0	1	1	0	0	1	1	0	0	1
0	0	0	0	0	1	1	0	0	1	1	0	1	1
0	0	0	0	0	1	1	0	0	1	1	1	0	1
0	0	0	0	0	1	1	0	0	1	1	1	1	1
0	0	0	0	0	1	1	0	1	0	0	0	0	1
0	0	0	0	0	1	1	0	1	0	0	0	1	1
0	0	0	0	0	1	1	0	1	0	0	1	0	1
0	0	0	0	0	1	1	0	1	0	0	1	1	1
0	0	0	0	0	1	1	0	1	0	1	0	0	1
0	0	0	0	0	1	1	0	1	0	1	0	1	1
0	0	0	0	0	1	1	0	1	0	1	1	0	1
0	0	0	0	0	1	1	0	1	0	1	1	1	1
0	0	0	0	0	1	1	0	1	1	0	0	0	1
0	0	0	0	0	1	1	0	1	1	0	0	1	1
0	0	0	0	0	1	1	0	1	1	0	1	0	1
0	0	0	0	0	1	1	0	1	1	0	1	1	1
0	0	0	0	0	1	1	0	1	1	1	0	0	1
0	0	0	0	0	1	1	0	1	1	1	0	1	1
0	0	0	0	0	1	1	0	1	1	1	1	0	1
0	0	0	0	0	1	1	0	1	1	1	1	1	1
0	0	0	0	0	1	1	1	0	0	1	0	0	1
0	0	0	0	0	1	1	1	0	0	0	0	1	1
0	0	0	0	0	1	1	1	0	0	0	1	0	1
0	0	0	0	0	1	1	1	0	0	0	1	1	1
0	0	0	0	0	1	1	1	0	0	0	0	0	1
0	0	0	0	0	1	1	1	0	0	1	0	1	1
0	0	0	0	0	1	1	1	0	0	1	1	0	1
0	0	0	0	0	1	1	1	0	0	1	1	1	1
0	0	0	0	0	1	1	1	0	1	1	0	0	1
0	0	0	0	0	1	1	1	0	1	0	0	1	1
0	0	0	0	0	1	1	1	0	1	0	1	0	1
0	0	0	0	0	1	1	1	0	1	0	1	1	1
0	0	0	0	0	1	1	1	0	1	0	0	0	1
0	0	0	0	0	1	1	1	0	1	1	0	1	1
0	0	0	0	0	1	1	1	0	1	1	1	0	1
0	0	0	0	0	1	1	1	0	1	1	1	1	1
0	0	0	0	0	1	1	1	1	0	1	0	0	1
0	0	0	0	0	1	1	1	1	0	0	0	1	1
0	0	0	0	0	1	1	1	1	0	0	1	0	1

0	0	0	0	0	1	1	1	1	0	0	1	1	1
0	0	0	0	0	1	1	1	1	0	0	0	0	1
0	0	0	0	0	1	1	1	1	0	1	0	1	1
0	0	0	0	0	1	1	1	1	0	1	1	0	1
0	0	0	0	0	1	1	1	1	0	1	1	1	1
0	0	0	0	0	1	1	1	1	1	1	0	0	1
0	0	0	0	0	1	1	1	1	1	0	0	1	1
0	0	0	0	0	1	1	1	1	1	0	1	0	1
0	0	0	0	0	1	1	1	1	1	0	1	1	1
0	0	0	0	0	1	1	1	1	1	0	0	0	1
0	0	0	0	0	1	1	1	1	1	1	0	1	1
0	0	0	0	0	1	1	1	1	1	1	1	0	1
0	0	0	0	0	1	1	1	1	1	1	1	1	1
0	0	0	0	1	0	0	0	0	0	0	0	0	1
0	0	0	0	1	0	0	0	0	0	0	0	1	1
0	0	0	0	1	0	0	0	0	0	0	1	0	1
0	0	0	0	1	0	0	0	0	0	0	1	1	1
0	0	0	0	1	0	0	0	0	0	1	0	0	1
0	0	0	0	1	0	0	0	0	0	1	0	1	1
0	0	0	0	1	0	0	0	0	0	1	1	0	1
0	0	0	0	1	0	0	0	0	0	1	1	1	1
0	0	0	0	1	0	0	0	0	1	0	0	0	1
0	0	0	0	1	0	0	0	0	1	0	0	1	1
0	0	0	0	1	0	0	0	0	1	0	1	0	1
0	0	0	0	1	0	0	0	0	1	0	1	1	1
0	0	0	0	1	0	0	0	0	1	1	0	0	1
0	0	0	0	1	0	0	0	0	1	1	0	1	1
0	0	0	0	1	0	0	0	0	1	1	1	0	1
0	0	0	0	1	0	0	0	0	1	1	1	1	1
0	0	0	0	1	0	0	0	1	0	0	0	0	1
0	0	0	0	1	0	0	0	1	0	0	0	1	1
0	0	0	0	1	0	0	0	1	0	0	1	0	1
0	0	0	0	1	0	0	0	1	0	0	1	1	1
0	0	0	0	1	0	0	0	1	0	1	0	0	1
0	0	0	0	1	0	0	0	1	0	1	0	1	1
0	0	0	0	1	0	0	0	1	0	1	1	0	1
0	0	0	0	1	0	0	0	1	0	1	1	1	1
0	0	0	0	1	0	0	0	1	1	0	0	0	1
0	0	0	0	1	0	0	0	1	1	0	0	1	1
0	0	0	0	1	0	0	0	1	1	0	1	0	1
0	0	0	0	1	0	0	0	1	1	0	1	1	1
0	0	0	0	1	0	0	0	1	1	1	0	0	1
0	0	0	0	1	0	0	0	1	1	1	0	1	1
0	0	0	0	1	0	0	0	1	1	1	1	0	1
0	0	0	0	1	0	0	0	1	1	1	1	1	1
0	0	0	0	1	0	0	1	0	0	0	0	0	1

0	0	0	0	1	0	0	1	0	0	0	0	1	1
0	0	0	0	1	0	0	1	0	0	0	1	0	1
0	0	0	0	1	0	0	1	0	0	0	1	1	1
0	0	0	0	1	0	0	1	0	0	1	0	0	1
0	0	0	0	1	0	0	1	0	0	1	0	1	1
0	0	0	0	1	0	0	1	0	0	1	1	0	1
0	0	0	0	1	0	0	1	0	0	1	1	1	1
0	0	0	0	1	0	0	1	0	1	0	0	0	1
0	0	0	0	1	0	0	1	0	1	0	0	1	1
0	0	0	0	1	0	0	1	0	1	0	1	0	1
0	0	0	0	1	0	0	1	0	1	0	1	1	1
0	0	0	0	1	0	0	1	0	1	1	0	0	1
0	0	0	0	1	0	0	1	0	1	1	0	1	1
0	0	0	0	1	0	0	1	0	1	1	1	0	1
0	0	0	0	1	0	0	1	0	1	1	1	1	1
0	0	0	0	1	0	0	1	1	0	0	0	0	1
0	0	0	0	1	0	0	1	1	0	0	0	1	1
0	0	0	0	1	0	0	1	1	0	0	1	0	1
0	0	0	0	1	0	0	1	1	0	0	1	1	1
0	0	0	0	1	0	0	1	1	0	1	0	0	1
0	0	0	0	1	0	0	1	1	0	1	0	1	1
0	0	0	0	1	0	0	1	1	0	1	1	0	1
0	0	0	0	1	0	0	1	1	0	1	1	1	1
0	0	0	0	1	0	0	1	1	1	0	0	0	1
0	0	0	0	1	0	0	1	1	1	0	0	1	1
0	0	0	0	1	0	0	1	1	1	0	1	0	1
0	0	0	0	1	0	0	1	1	1	0	1	1	1
0	0	0	0	1	0	0	1	1	1	1	0	0	1
0	0	0	0	1	0	0	1	1	1	1	0	1	1
0	0	0	0	1	0	0	1	1	1	1	1	0	1
0	0	0	0	1	0	0	1	1	1	1	1	1	1
0	0	0	0	1	0	1	0	0	0	0	0	0	1
0	0	0	0	1	0	1	0	0	0	0	0	1	1
0	0	0	0	1	0	1	0	0	0	0	1	0	1
0	0	0	0	1	0	1	0	0	0	0	1	1	1
0	0	0	0	1	0	1	0	0	0	1	0	0	1
0	0	0	0	1	0	1	0	0	0	1	0	1	1
0	0	0	0	1	0	1	0	0	0	1	1	0	1
0	0	0	0	1	0	1	0	0	0	1	1	1	1
0	0	0	0	1	0	1	0	0	1	0	0	0	1
0	0	0	0	1	0	1	0	0	1	0	0	1	1
0	0	0	0	1	0	1	0	0	1	0	1	0	1
0	0	0	0	1	0	1	0	0	1	0	1	1	1
0	0	0	0	1	0	1	0	0	1	1	0	0	1
0	0	0	0	1	0	1	0	0	1	1	0	1	1
0	0	0	0	1	0	1	0	0	1	1	1	0	1

0	0	0	0	1	0	1	0	0	1	1	1	1	1
0	0	0	0	1	0	1	0	1	0	0	0	0	1
0	0	0	0	1	0	1	0	1	0	0	0	1	1
0	0	0	0	1	0	1	0	1	0	0	1	0	1
0	0	0	0	1	0	1	0	1	0	0	1	1	1
0	0	0	0	1	0	1	0	1	0	1	0	0	1
0	0	0	0	1	0	1	0	1	0	1	0	1	1
0	0	0	0	1	0	1	0	1	0	1	1	0	1
0	0	0	0	1	0	1	0	1	0	1	1	1	1
0	0	0	0	1	0	1	0	1	1	0	0	0	1
0	0	0	0	1	0	1	0	1	1	0	0	1	1
0	0	0	0	1	0	1	0	1	1	0	1	0	1
0	0	0	0	1	0	1	0	1	1	0	1	1	1
0	0	0	0	1	0	1	0	1	1	1	0	0	1
0	0	0	0	1	0	1	0	1	1	1	0	1	1
0	0	0	0	1	0	1	0	1	1	1	1	0	1
0	0	0	0	1	0	1	0	1	1	1	1	1	1
0	0	0	0	1	0	1	1	0	0	0	0	0	1
0	0	0	0	1	0	1	1	0	0	0	0	1	1
0	0	0	0	1	0	1	1	0	0	0	1	0	1
0	0	0	0	1	0	1	1	0	0	0	1	1	1
0	0	0	0	1	0	1	1	0	0	1	0	0	1
0	0	0	0	1	0	1	1	0	0	1	0	1	1
0	0	0	0	1	0	1	1	0	0	1	1	0	1
0	0	0	0	1	0	1	1	0	0	1	1	1	1
0	0	0	0	1	0	1	1	0	1	0	0	0	1
0	0	0	0	1	0	1	1	0	1	0	0	1	1
0	0	0	0	1	0	1	1	0	1	0	1	0	1
0	0	0	0	1	0	1	1	0	1	0	1	1	1
0	0	0	0	1	0	1	1	0	1	1	0	0	1
0	0	0	0	1	0	1	1	0	1	1	0	1	1
0	0	0	0	1	0	1	1	0	1	1	1	0	1
0	0	0	0	1	0	1	1	0	1	1	1	1	1
0	0	0	0	1	0	1	1	1	0	0	0	0	1
0	0	0	0	1	0	1	1	1	0	0	0	1	1
0	0	0	0	1	0	1	1	1	0	0	1	0	1
0	0	0	0	1	0	1	1	1	0	0	1	1	1
0	0	0	0	1	0	1	1	1	0	1	0	0	1
0	0	0	0	1	0	1	1	1	0	1	0	1	1
0	0	0	0	1	0	1	1	1	0	1	1	0	1
0	0	0	0	1	0	1	1	1	0	1	1	1	1
0	0	0	0	1	0	1	1	1	1	0	0	0	1
0	0	0	0	1	0	1	1	1	1	0	0	1	1
0	0	0	0	1	0	1	1	1	1	0	1	0	1
0	0	0	0	1	0	1	1	1	1	0	1	1	1
0	0	0	0	1	0	1	1	1	1	1	0	0	1

0	0	0	0	1	0	1	1	1	1	1	0	1	1
0	0	0	0	1	0	1	1	1	1	1	1	0	1
0	0	0	0	1	0	1	1	1	1	1	1	1	1
0	0	0	0	1	1	0	0	0	0	0	0	0	1
0	0	0	0	1	1	0	0	0	0	0	0	1	1
0	0	0	0	1	1	0	0	0	0	0	1	0	1
0	0	0	0	1	1	0	0	0	0	0	1	1	1
0	0	0	0	1	1	0	0	0	0	1	0	0	1
0	0	0	0	1	1	0	0	0	0	1	0	1	1
0	0	0	0	1	1	0	0	0	0	1	1	0	1
0	0	0	0	1	1	0	0	0	0	1	1	1	1
0	0	0	0	1	1	0	0	0	1	0	0	0	1
0	0	0	0	1	1	0	0	0	1	0	0	1	1
0	0	0	0	1	1	0	0	0	1	0	1	0	1
0	0	0	0	1	1	0	0	0	1	0	1	1	1
0	0	0	0	1	1	0	0	0	1	1	0	0	1
0	0	0	0	1	1	0	0	0	1	1	0	1	1
0	0	0	0	1	1	0	0	0	1	1	1	0	1
0	0	0	0	1	1	0	0	0	1	1	1	1	1
0	0	0	0	1	1	0	0	1	0	0	0	0	1
0	0	0	0	1	1	0	0	1	0	0	0	1	1
0	0	0	0	1	1	0	0	1	0	0	1	0	1
0	0	0	0	1	1	0	0	1	0	0	1	1	1
0	0	0	0	1	1	0	0	1	0	1	0	0	1
0	0	0	0	1	1	0	0	1	0	1	0	1	1
0	0	0	0	1	1	0	0	1	0	1	1	0	1
0	0	0	0	1	1	0	0	1	0	1	1	1	1
0	0	0	0	1	1	0	0	1	1	0	0	0	1
0	0	0	0	1	1	0	0	1	1	0	0	1	1
0	0	0	0	1	1	0	0	1	1	0	1	0	1
0	0	0	0	1	1	0	0	1	1	0	1	1	1
0	0	0	0	1	1	0	0	1	1	1	0	0	1
0	0	0	0	1	1	0	0	1	1	1	0	1	1
0	0	0	0	1	1	0	0	1	1	1	1	0	1
0	0	0	0	1	1	0	0	1	1	1	1	1	1
0	0	0	0	1	1	0	1	0	0	0	0	0	1
0	0	0	0	1	1	0	1	0	0	0	0	1	1
0	0	0	0	1	1	0	1	0	0	0	1	0	1
0	0	0	0	1	1	0	1	0	0	0	1	1	1
0	0	0	0	1	1	0	1	0	0	1	0	0	1
0	0	0	0	1	1	0	1	0	0	1	0	1	1
0	0	0	0	1	1	0	1	0	0	1	1	0	1
0	0	0	0	1	1	0	1	0	0	1	1	1	1
0	0	0	0	1	1	0	1	0	1	0	0	0	1
0	0	0	0	1	1	0	1	0	1	0	0	1	1
0	0	0	0	1	1	0	1	0	1	0	1	0	1

0	0	0	0	1	1	0	1	0	1	0	1	1	1
0	0	0	0	1	1	0	1	0	1	1	0	0	1
0	0	0	0	1	1	0	1	0	1	1	0	1	1
0	0	0	0	1	1	0	1	0	1	1	1	0	1
0	0	0	0	1	1	0	1	0	1	1	1	1	1
0	0	0	0	1	1	0	1	1	0	0	0	0	1
0	0	0	0	1	1	0	1	1	0	0	0	1	1
0	0	0	0	1	1	0	1	1	0	0	1	0	1
0	0	0	0	1	1	0	1	1	0	0	1	1	1
0	0	0	0	1	1	0	1	1	0	1	0	0	1
0	0	0	0	1	1	0	1	1	0	1	0	1	1
0	0	0	0	1	1	0	1	1	0	1	1	0	1
0	0	0	0	1	1	0	1	1	0	1	1	1	1
0	0	0	0	1	1	0	1	1	1	0	0	0	1
0	0	0	0	1	1	0	1	1	1	0	0	1	1
0	0	0	0	1	1	0	1	1	1	0	1	0	1
0	0	0	0	1	1	0	1	1	1	0	1	1	1
0	0	0	0	1	1	0	1	1	1	1	0	0	1
0	0	0	0	1	1	0	1	1	1	1	0	1	1
0	0	0	0	1	1	0	1	1	1	1	1	0	1
0	0	0	0	1	1	0	1	1	1	1	1	1	1
0	0	0	0	1	1	1	0	0	0	0	0	0	1
0	0	0	0	1	1	1	0	0	0	0	0	1	1
0	0	0	0	1	1	1	0	0	0	0	1	0	1
0	0	0	0	1	1	1	0	0	0	0	1	1	1
0	0	0	0	1	1	1	0	0	0	1	0	0	1
0	0	0	0	1	1	1	0	0	0	1	0	1	1
0	0	0	0	1	1	1	0	0	0	1	1	0	1
0	0	0	0	1	1	1	0	0	0	1	1	1	1
0	0	0	0	1	1	1	0	0	1	0	0	0	1
0	0	0	0	1	1	1	0	0	1	0	0	1	1
0	0	0	0	1	1	1	0	0	1	0	1	0	1
0	0	0	0	1	1	1	0	0	1	0	1	1	1
0	0	0	0	1	1	1	0	0	1	1	0	0	1
0	0	0	0	1	1	1	0	0	1	1	0	1	1
0	0	0	0	1	1	1	0	0	1	1	1	0	1
0	0	0	0	1	1	1	0	0	1	1	1	1	1
0	0	0	0	1	1	1	0	1	0	0	0	0	1
0	0	0	0	1	1	1	0	1	0	0	0	1	1
0	0	0	0	1	1	1	0	1	0	0	1	0	1
0	0	0	0	1	1	1	0	1	0	0	1	1	1
0	0	0	0	1	1	1	0	1	0	1	0	0	1
0	0	0	0	1	1	1	0	1	0	1	0	1	1
0	0	0	0	1	1	1	0	1	0	1	1	0	1
0	0	0	0	1	1	1	0	1	0	1	1	1	1
0	0	0	0	1	1	1	0	1	1	0	0	0	1

0	0	0	0	1	1	1	0	1	1	0	0	1	1
0	0	0	0	1	1	1	0	1	1	0	1	0	1
0	0	0	0	1	1	1	0	1	1	0	1	1	1
0	0	0	0	1	1	1	0	1	1	1	0	0	1
0	0	0	0	1	1	1	0	1	1	1	0	1	1
0	0	0	0	1	1	1	0	1	1	1	1	0	1
0	0	0	0	1	1	1	0	1	1	1	1	1	1
0	0	0	0	1	1	1	1	0	0	1	0	0	1
0	0	0	0	1	1	1	1	0	0	0	0	1	1
0	0	0	0	1	1	1	1	0	0	0	1	0	1
0	0	0	0	1	1	1	1	0	0	0	1	1	1
0	0	0	0	1	1	1	1	0	0	0	0	0	1
0	0	0	0	1	1	1	1	0	0	1	0	1	1
0	0	0	0	1	1	1	1	0	0	1	1	0	1
0	0	0	0	1	1	1	1	0	0	1	1	1	1
0	0	0	0	1	1	1	1	0	1	1	0	0	1
0	0	0	0	1	1	1	1	0	1	0	0	1	1
0	0	0	0	1	1	1	1	0	1	0	1	0	1
0	0	0	0	1	1	1	1	0	1	0	1	1	1
0	0	0	0	1	1	1	1	0	1	0	0	0	1
0	0	0	0	1	1	1	1	0	1	1	0	1	1
0	0	0	0	1	1	1	1	0	1	1	1	0	1
0	0	0	0	1	1	1	1	0	1	1	1	1	1
0	0	0	0	1	1	1	1	1	0	1	0	0	1
0	0	0	0	1	1	1	1	1	0	0	0	1	1
0	0	0	0	1	1	1	1	1	0	0	1	0	1
0	0	0	0	1	1	1	1	1	0	0	1	1	1
0	0	0	0	1	1	1	1	1	0	0	0	0	1
0	0	0	0	1	1	1	1	1	0	1	0	1	1
0	0	0	0	1	1	1	1	1	0	1	1	0	1
0	0	0	0	1	1	1	1	1	0	1	1	1	1
0	0	0	0	1	1	1	1	1	1	1	0	0	1
0	0	0	0	1	1	1	1	1	1	0	0	1	1
0	0	0	0	1	1	1	1	1	1	0	1	0	1
0	0	0	0	1	1	1	1	1	1	0	1	1	1
0	0	0	0	1	1	1	1	1	1	0	0	0	1
0	0	0	0	1	1	1	1	1	1	1	0	1	1
0	0	0	0	1	1	1	1	1	1	1	1	0	1
0	0	0	0	1	1	1	1	1	1	1	1	1	1
0	0	0	1	0	0	0	0	0	0	0	0	0	1
0	0	0	1	0	0	0	0	0	0	0	0	1	1
0	0	0	1	0	0	0	0	0	0	0	1	0	1
0	0	0	1	0	0	0	0	0	0	0	1	1	1
0	0	0	1	0	0	0	0	0	0	1	0	0	1
0	0	0	1	0	0	0	0	0	0	1	0	1	1
0	0	0	1	0	0	0	0	0	0	1	1	0	1

0	0	0	1	0	0	0	0	0	0	1	1	1	1
0	0	0	1	0	0	0	0	0	1	0	0	0	1
0	0	0	1	0	0	0	0	0	1	0	0	1	1
0	0	0	1	0	0	0	0	0	1	0	1	0	1
0	0	0	1	0	0	0	0	0	1	0	1	1	1
0	0	0	1	0	0	0	0	0	1	1	0	0	1
0	0	0	1	0	0	0	0	0	1	1	0	1	1
0	0	0	1	0	0	0	0	0	1	1	1	0	1
0	0	0	1	0	0	0	0	0	1	1	1	1	1
0	0	0	1	0	0	0	0	1	0	0	0	0	1
0	0	0	1	0	0	0	0	1	0	0	0	1	1
0	0	0	1	0	0	0	0	1	0	0	1	0	1
0	0	0	1	0	0	0	0	1	0	0	1	1	1
0	0	0	1	0	0	0	0	1	0	1	0	0	1
0	0	0	1	0	0	0	0	1	0	1	0	1	1
0	0	0	1	0	0	0	0	1	0	1	1	0	1
0	0	0	1	0	0	0	0	1	0	1	1	1	1
0	0	0	1	0	0	0	0	1	1	0	0	0	1
0	0	0	1	0	0	0	0	1	1	0	0	1	1
0	0	0	1	0	0	0	0	1	1	0	1	0	1
0	0	0	1	0	0	0	0	1	1	0	1	1	1
0	0	0	1	0	0	0	0	1	1	1	0	0	1
0	0	0	1	0	0	0	0	1	1	1	0	1	1
0	0	0	1	0	0	0	0	1	1	1	1	0	1
0	0	0	1	0	0	0	0	1	1	1	1	1	1
0	0	0	1	0	0	0	1	0	0	0	0	0	1
0	0	0	1	0	0	0	1	0	0	0	0	1	1
0	0	0	1	0	0	0	1	0	0	0	1	0	1
0	0	0	1	0	0	0	1	0	0	0	1	1	1
0	0	0	1	0	0	0	1	0	0	1	0	0	1
0	0	0	1	0	0	0	1	0	0	1	0	1	1
0	0	0	1	0	0	0	1	0	0	1	1	0	1
0	0	0	1	0	0	0	1	0	0	1	1	1	1
0	0	0	1	0	0	0	1	0	1	0	0	0	1
0	0	0	1	0	0	0	1	0	1	0	0	1	1
0	0	0	1	0	0	0	1	0	1	0	1	0	1
0	0	0	1	0	0	0	1	0	1	0	1	1	1
0	0	0	1	0	0	0	1	0	1	1	0	0	1
0	0	0	1	0	0	0	1	0	1	1	0	1	1
0	0	0	1	0	0	0	1	0	1	1	1	0	1
0	0	0	1	0	0	0	1	0	1	1	1	1	1
0	0	0	1	0	0	0	1	1	0	0	0	0	1
0	0	0	1	0	0	0	1	1	0	0	0	1	1
0	0	0	1	0	0	0	1	1	0	0	1	0	1
0	0	0	1	0	0	0	1	1	0	0	1	1	1
0	0	0	1	0	0	0	1	1	0	1	0	0	1

0	0	0	1	0	0	0	1	1	0	1	0	1	1
0	0	0	1	0	0	0	1	1	0	1	1	0	1
0	0	0	1	0	0	0	1	1	0	1	1	1	1
0	0	0	1	0	0	0	1	1	1	0	0	0	1
0	0	0	1	0	0	0	1	1	1	0	0	1	1
0	0	0	1	0	0	0	1	1	1	0	1	0	1
0	0	0	1	0	0	0	1	1	1	0	1	1	1
0	0	0	1	0	0	0	1	1	1	1	0	0	1
0	0	0	1	0	0	0	1	1	1	1	0	1	1
0	0	0	1	0	0	0	1	1	1	1	1	0	1
0	0	0	1	0	0	0	1	1	1	1	1	1	1
0	0	0	1	0	0	1	0	0	0	0	0	0	1
0	0	0	1	0	0	1	0	0	0	0	0	1	1
0	0	0	1	0	0	1	0	0	0	0	1	0	1
0	0	0	1	0	0	1	0	0	0	0	1	1	1
0	0	0	1	0	0	1	0	0	0	1	0	0	1
0	0	0	1	0	0	1	0	0	0	1	0	1	1
0	0	0	1	0	0	1	0	0	0	1	1	0	1
0	0	0	1	0	0	1	0	0	0	1	1	1	1
0	0	0	1	0	0	1	0	0	1	0	0	0	1
0	0	0	1	0	0	1	0	0	1	0	0	1	1
0	0	0	1	0	0	1	0	0	1	0	1	0	1
0	0	0	1	0	0	1	0	0	1	0	1	1	1
0	0	0	1	0	0	1	0	0	1	1	0	0	1
0	0	0	1	0	0	1	0	0	1	1	0	1	1
0	0	0	1	0	0	1	0	0	1	1	1	0	1
0	0	0	1	0	0	1	0	0	1	1	1	1	1
0	0	0	1	0	0	1	0	1	0	0	0	0	1
0	0	0	1	0	0	1	0	1	0	0	0	1	1
0	0	0	1	0	0	1	0	1	0	0	1	0	1
0	0	0	1	0	0	1	0	1	0	0	1	1	1
0	0	0	1	0	0	1	0	1	0	1	0	0	1
0	0	0	1	0	0	1	0	1	0	1	0	1	1
0	0	0	1	0	0	1	0	1	0	1	1	0	1
0	0	0	1	0	0	1	0	1	0	1	1	1	1
0	0	0	1	0	0	1	0	1	1	0	0	0	1
0	0	0	1	0	0	1	0	1	1	0	0	1	1
0	0	0	1	0	0	1	0	1	1	0	1	0	1
0	0	0	1	0	0	1	0	1	1	0	1	1	1
0	0	0	1	0	0	1	0	1	1	1	0	0	1
0	0	0	1	0	0	1	0	1	1	1	0	1	1
0	0	0	1	0	0	1	0	1	1	1	1	0	1
0	0	0	1	0	0	1	0	1	1	1	1	1	1
0	0	0	1	0	0	1	1	0	0	0	0	0	1
0	0	0	1	0	0	1	1	0	0	0	0	1	1
0	0	0	1	0	0	1	1	0	0	0	1	0	1

0	0	0	1	0	0	1	1	0	0	0	1	1	1
0	0	0	1	0	0	1	1	0	0	1	0	0	1
0	0	0	1	0	0	1	1	0	0	1	0	1	1
0	0	0	1	0	0	1	1	0	0	1	1	0	1
0	0	0	1	0	0	1	1	0	0	1	1	1	1
0	0	0	1	0	0	1	1	0	1	0	0	0	1
0	0	0	1	0	0	1	1	0	1	0	0	1	1
0	0	0	1	0	0	1	1	0	1	0	1	0	1
0	0	0	1	0	0	1	1	0	1	0	1	1	1
0	0	0	1	0	0	1	1	0	1	1	0	0	1
0	0	0	1	0	0	1	1	0	1	1	0	1	1
0	0	0	1	0	0	1	1	0	1	1	1	0	1
0	0	0	1	0	0	1	1	0	1	1	1	1	1
0	0	0	1	0	0	1	1	1	0	0	0	0	1
0	0	0	1	0	0	1	1	1	0	0	0	1	1
0	0	0	1	0	0	1	1	1	0	0	1	0	1
0	0	0	1	0	0	1	1	1	0	0	1	1	1
0	0	0	1	0	0	1	1	1	0	1	0	0	1
0	0	0	1	0	0	1	1	1	0	1	0	1	1
0	0	0	1	0	0	1	1	1	0	1	1	0	1
0	0	0	1	0	0	1	1	1	0	1	1	1	1
0	0	0	1	0	0	1	1	1	1	0	0	0	1
0	0	0	1	0	0	1	1	1	1	0	0	1	1
0	0	0	1	0	0	1	1	1	1	0	1	0	1
0	0	0	1	0	0	1	1	1	1	0	1	1	1
0	0	0	1	0	0	1	1	1	1	1	0	0	1
0	0	0	1	0	0	1	1	1	1	1	0	1	1
0	0	0	1	0	0	1	1	1	1	1	1	0	1
0	0	0	1	0	0	1	1	1	1	1	1	1	1
0	0	0	1	0	1	0	0	0	0	0	0	0	1
0	0	0	1	0	1	0	0	0	0	0	0	1	1
0	0	0	1	0	1	0	0	0	0	0	1	0	1
0	0	0	1	0	1	0	0	0	0	0	1	1	1
0	0	0	1	0	1	0	0	0	0	1	0	0	1
0	0	0	1	0	1	0	0	0	0	1	0	1	1
0	0	0	1	0	1	0	0	0	0	1	1	0	1
0	0	0	1	0	1	0	0	0	0	1	1	1	1
0	0	0	1	0	1	0	0	0	1	0	0	0	1
0	0	0	1	0	1	0	0	0	1	0	0	1	1
0	0	0	1	0	1	0	0	0	1	0	1	0	1
0	0	0	1	0	1	0	0	0	1	0	1	1	1
0	0	0	1	0	1	0	0	0	1	1	0	0	1
0	0	0	1	0	1	0	0	0	1	1	0	1	1
0	0	0	1	0	1	0	0	0	1	1	1	0	1
0	0	0	1	0	1	0	0	0	1	1	1	1	1
0	0	0	1	0	1	0	0	1	0	0	0	0	1

0	0	0	1	0	1	0	0	1	0	0	0	1	1
0	0	0	1	0	1	0	0	1	0	0	1	0	1
0	0	0	1	0	1	0	0	1	0	0	1	1	1
0	0	0	1	0	1	0	0	1	0	1	0	0	1
0	0	0	1	0	1	0	0	1	0	1	0	1	1
0	0	0	1	0	1	0	0	1	0	1	1	0	1
0	0	0	1	0	1	0	0	1	0	1	1	1	1
0	0	0	1	0	1	0	0	1	1	0	0	0	1
0	0	0	1	0	1	0	0	1	1	0	0	1	1
0	0	0	1	0	1	0	0	1	1	0	1	0	1
0	0	0	1	0	1	0	0	1	1	0	1	1	1
0	0	0	1	0	1	0	0	1	1	1	0	0	1
0	0	0	1	0	1	0	0	1	1	1	0	1	1
0	0	0	1	0	1	0	0	1	1	1	1	0	1
0	0	0	1	0	1	0	0	1	1	1	1	1	1
0	0	0	1	0	1	0	1	0	0	0	0	0	1
0	0	0	1	0	1	0	1	0	0	0	0	1	1
0	0	0	1	0	1	0	1	0	0	0	1	0	1
0	0	0	1	0	1	0	1	0	0	0	1	1	1
0	0	0	1	0	1	0	1	0	0	1	0	0	1
0	0	0	1	0	1	0	1	0	0	1	0	1	1
0	0	0	1	0	1	0	1	0	0	1	1	0	1
0	0	0	1	0	1	0	1	0	0	1	1	1	1
0	0	0	1	0	1	0	1	0	1	0	0	0	1
0	0	0	1	0	1	0	1	0	1	0	0	1	1
0	0	0	1	0	1	0	1	0	1	0	1	0	1
0	0	0	1	0	1	0	1	0	1	0	1	1	1
0	0	0	1	0	1	0	1	0	1	1	0	0	1
0	0	0	1	0	1	0	1	0	1	1	0	1	1
0	0	0	1	0	1	0	1	0	1	1	1	0	1
0	0	0	1	0	1	0	1	0	1	1	1	1	1
0	0	0	1	0	1	0	1	1	0	0	0	0	1
0	0	0	1	0	1	0	1	1	0	0	0	1	1
0	0	0	1	0	1	0	1	1	0	0	1	0	1
0	0	0	1	0	1	0	1	1	0	0	1	1	1
0	0	0	1	0	1	0	1	1	0	1	0	0	1
0	0	0	1	0	1	0	1	1	0	1	0	1	1
0	0	0	1	0	1	0	1	1	0	1	1	0	1
0	0	0	1	0	1	0	1	1	0	1	1	1	1
0	0	0	1	0	1	0	1	1	1	0	0	0	1
0	0	0	1	0	1	0	1	1	1	0	0	1	1
0	0	0	1	0	1	0	1	1	1	0	1	0	1
0	0	0	1	0	1	0	1	1	1	0	1	1	1
0	0	0	1	0	1	0	1	1	1	1	0	0	1
0	0	0	1	0	1	0	1	1	1	1	0	1	1
0	0	0	1	0	1	0	1	1	1	1	1	0	1

0	0	0	1	0	1	0	1	1	1	1	1	1	1
0	0	0	1	0	1	1	0	0	0	0	0	0	1
0	0	0	1	0	1	1	0	0	0	0	0	1	1
0	0	0	1	0	1	1	0	0	0	0	1	0	1
0	0	0	1	0	1	1	0	0	0	0	1	1	1
0	0	0	1	0	1	1	0	0	0	1	0	0	1
0	0	0	1	0	1	1	0	0	0	1	0	1	1
0	0	0	1	0	1	1	0	0	0	1	1	0	1
0	0	0	1	0	1	1	0	0	0	1	1	1	1
0	0	0	1	0	1	1	0	0	1	0	0	0	1
0	0	0	1	0	1	1	0	0	1	0	0	1	1
0	0	0	1	0	1	1	0	0	1	0	1	0	1
0	0	0	1	0	1	1	0	0	1	0	1	1	1
0	0	0	1	0	1	1	0	0	1	1	0	0	1
0	0	0	1	0	1	1	0	0	1	1	0	1	1
0	0	0	1	0	1	1	0	0	1	1	1	0	1
0	0	0	1	0	1	1	0	0	1	1	1	1	1
0	0	0	1	0	1	1	0	1	0	0	0	0	1
0	0	0	1	0	1	1	0	1	0	0	0	1	1
0	0	0	1	0	1	1	0	1	0	0	1	0	1
0	0	0	1	0	1	1	0	1	0	0	1	1	1
0	0	0	1	0	1	1	0	1	0	1	0	0	1
0	0	0	1	0	1	1	0	1	0	1	0	1	1
0	0	0	1	0	1	1	0	1	0	1	1	0	1
0	0	0	1	0	1	1	0	1	0	1	1	1	1
0	0	0	1	0	1	1	0	1	1	0	0	0	1
0	0	0	1	0	1	1	0	1	1	0	0	1	1
0	0	0	1	0	1	1	0	1	1	0	1	0	1
0	0	0	1	0	1	1	0	1	1	0	1	1	1
0	0	0	1	0	1	1	0	1	1	1	0	0	1
0	0	0	1	0	1	1	0	1	1	1	0	1	1
0	0	0	1	0	1	1	0	1	1	1	1	0	1
0	0	0	1	0	1	1	0	1	1	1	1	1	1
0	0	0	1	0	1	1	1	0	0	1	0	0	1
0	0	0	1	0	1	1	1	0	0	0	0	1	1
0	0	0	1	0	1	1	1	0	0	0	1	0	1
0	0	0	1	0	1	1	1	0	0	0	1	1	1
0	0	0	1	0	1	1	1	0	0	0	0	0	1
0	0	0	1	0	1	1	1	0	0	1	0	1	1
0	0	0	1	0	1	1	1	0	0	1	1	0	1
0	0	0	1	0	1	1	1	0	0	1	1	1	1
0	0	0	1	0	1	1	1	0	1	1	0	0	1
0	0	0	1	0	1	1	1	0	1	0	0	1	1
0	0	0	1	0	1	1	1	0	1	0	1	0	1
0	0	0	1	0	1	1	1	0	1	0	1	1	1
0	0	0	1	0	1	1	1	0	1	0	0	0	1

0	0	0	1	0	1	1	1	0	1	1	0	1	1
0	0	0	1	0	1	1	1	0	1	1	1	0	1
0	0	0	1	0	1	1	1	0	1	1	1	1	1
0	0	0	1	0	1	1	1	1	0	1	0	0	1
0	0	0	1	0	1	1	1	1	0	0	0	1	1
0	0	0	1	0	1	1	1	1	0	0	1	0	1
0	0	0	1	0	1	1	1	1	0	0	1	1	1
0	0	0	1	0	1	1	1	1	0	0	0	0	1
0	0	0	1	0	1	1	1	1	0	1	0	1	1
0	0	0	1	0	1	1	1	1	0	1	1	0	1
0	0	0	1	0	1	1	1	1	0	1	1	1	1
0	0	0	1	0	1	1	1	1	1	1	0	0	1
0	0	0	1	0	1	1	1	1	1	0	0	1	1
0	0	0	1	0	1	1	1	1	1	0	1	0	1
0	0	0	1	0	1	1	1	1	1	0	1	1	1
0	0	0	1	0	1	1	1	1	1	0	0	0	1
0	0	0	1	0	1	1	1	1	1	1	0	1	1
0	0	0	1	0	1	1	1	1	1	1	1	0	1
0	0	0	1	0	1	1	1	1	1	1	1	1	1
0	0	0	1	1	0	0	0	0	0	0	0	0	1
0	0	0	1	1	0	0	0	0	0	0	0	1	1
0	0	0	1	1	0	0	0	0	0	0	1	0	1
0	0	0	1	1	0	0	0	0	0	0	1	1	1
0	0	0	1	1	0	0	0	0	0	1	0	0	1
0	0	0	1	1	0	0	0	0	0	1	0	1	1
0	0	0	1	1	0	0	0	0	0	1	1	0	1
0	0	0	1	1	0	0	0	0	0	1	1	1	1
0	0	0	1	1	0	0	0	0	1	0	0	0	1
0	0	0	1	1	0	0	0	0	1	0	0	1	1
0	0	0	1	1	0	0	0	0	1	0	1	0	1
0	0	0	1	1	0	0	0	0	1	0	1	1	1
0	0	0	1	1	0	0	0	0	1	1	0	0	1
0	0	0	1	1	0	0	0	0	1	1	0	1	1
0	0	0	1	1	0	0	0	0	1	1	1	0	1
0	0	0	1	1	0	0	0	0	1	1	1	1	1
0	0	0	1	1	0	0	0	1	0	0	0	0	1
0	0	0	1	1	0	0	0	1	0	0	0	1	1
0	0	0	1	1	0	0	0	1	0	0	1	0	1
0	0	0	1	1	0	0	0	1	0	0	1	1	1
0	0	0	1	1	0	0	0	1	0	1	0	0	1
0	0	0	1	1	0	0	0	1	0	1	0	1	1
0	0	0	1	1	0	0	0	1	0	1	1	0	1
0	0	0	1	1	0	0	0	1	0	1	1	1	1
0	0	0	1	1	0	0	0	1	1	0	0	0	1
0	0	0	1	1	0	0	0	1	1	0	0	1	1
0	0	0	1	1	0	0	0	1	1	0	1	0	1

0	0	0	1	1	0	0	0	1	1	0	1	1	1
0	0	0	1	1	0	0	0	1	1	1	0	0	1
0	0	0	1	1	0	0	0	1	1	1	0	1	1
0	0	0	1	1	0	0	0	1	1	1	1	0	1
0	0	0	1	1	0	0	0	1	1	1	1	1	1
0	0	0	1	1	0	0	1	0	0	0	0	0	1
0	0	0	1	1	0	0	1	0	0	0	0	1	1
0	0	0	1	1	0	0	1	0	0	0	1	0	1
0	0	0	1	1	0	0	1	0	0	0	1	1	1
0	0	0	1	1	0	0	1	0	0	1	0	0	1
0	0	0	1	1	0	0	1	0	0	1	0	1	1
0	0	0	1	1	0	0	1	0	0	1	1	0	1
0	0	0	1	1	0	0	1	0	0	1	1	1	1
0	0	0	1	1	0	0	1	0	1	0	0	0	1
0	0	0	1	1	0	0	1	0	1	0	0	1	1
0	0	0	1	1	0	0	1	0	1	0	1	0	1
0	0	0	1	1	0	0	1	0	1	0	1	1	1
0	0	0	1	1	0	0	1	0	1	1	0	0	1
0	0	0	1	1	0	0	1	0	1	1	0	1	1
0	0	0	1	1	0	0	1	0	1	1	1	0	1
0	0	0	1	1	0	0	1	0	1	1	1	1	1
0	0	0	1	1	0	0	1	1	0	0	0	0	1
0	0	0	1	1	0	0	1	1	0	0	0	1	1
0	0	0	1	1	0	0	1	1	0	0	1	0	1
0	0	0	1	1	0	0	1	1	0	0	1	1	1
0	0	0	1	1	0	0	1	1	0	1	0	0	1
0	0	0	1	1	0	0	1	1	0	1	0	1	1
0	0	0	1	1	0	0	1	1	0	1	1	0	1
0	0	0	1	1	0	0	1	1	0	1	1	1	1
0	0	0	1	1	0	0	1	1	1	0	0	0	1
0	0	0	1	1	0	0	1	1	1	0	0	1	1
0	0	0	1	1	0	0	1	1	1	0	1	0	1
0	0	0	1	1	0	0	1	1	1	0	1	1	1
0	0	0	1	1	0	0	1	1	1	1	0	0	1
0	0	0	1	1	0	0	1	1	1	1	0	1	1
0	0	0	1	1	0	0	1	1	1	1	1	0	1
0	0	0	1	1	0	0	1	1	1	1	1	1	1
0	0	0	1	1	0	1	0	0	0	0	0	0	1
0	0	0	1	1	0	1	0	0	0	0	0	1	1
0	0	0	1	1	0	1	0	0	0	0	1	0	1
0	0	0	1	1	0	1	0	0	0	0	1	1	1
0	0	0	1	1	0	1	0	0	0	1	0	0	1
0	0	0	1	1	0	1	0	0	0	1	0	1	1
0	0	0	1	1	0	1	0	0	0	1	1	0	1
0	0	0	1	1	0	1	0	0	0	1	1	1	1
0	0	0	1	1	0	1	0	0	1	0	0	0	1

0	0	0	1	1	0	1	0	0	1	0	0	1	1
0	0	0	1	1	0	1	0	0	1	0	1	0	1
0	0	0	1	1	0	1	0	0	1	0	1	1	1
0	0	0	1	1	0	1	0	0	1	1	0	0	1
0	0	0	1	1	0	1	0	0	1	1	0	1	1
0	0	0	1	1	0	1	0	0	1	1	1	0	1
0	0	0	1	1	0	1	0	0	1	1	1	1	1
0	0	0	1	1	0	1	0	1	0	0	0	0	1
0	0	0	1	1	0	1	0	1	0	0	0	1	1
0	0	0	1	1	0	1	0	1	0	0	1	0	1
0	0	0	1	1	0	1	0	1	0	0	1	1	1
0	0	0	1	1	0	1	0	1	0	1	0	0	1
0	0	0	1	1	0	1	0	1	0	1	0	1	1
0	0	0	1	1	0	1	0	1	0	1	1	0	1
0	0	0	1	1	0	1	0	1	0	1	1	1	1
0	0	0	1	1	0	1	0	1	1	0	0	0	1
0	0	0	1	1	0	1	0	1	1	0	0	1	1
0	0	0	1	1	0	1	0	1	1	0	1	0	1
0	0	0	1	1	0	1	0	1	1	0	1	1	1
0	0	0	1	1	0	1	0	1	1	1	0	0	1
0	0	0	1	1	0	1	0	1	1	1	0	1	1
0	0	0	1	1	0	1	0	1	1	1	1	0	1
0	0	0	1	1	0	1	0	1	1	1	1	1	1
0	0	0	1	1	0	1	1	0	0	0	0	0	1
0	0	0	1	1	0	1	1	0	0	0	0	1	1
0	0	0	1	1	0	1	1	0	0	0	1	0	1
0	0	0	1	1	0	1	1	0	0	0	1	1	1
0	0	0	1	1	0	1	1	0	0	1	0	0	1
0	0	0	1	1	0	1	1	0	0	1	0	1	1
0	0	0	1	1	0	1	1	0	0	1	1	0	1
0	0	0	1	1	0	1	1	0	0	1	1	1	1
0	0	0	1	1	0	1	1	0	1	0	0	0	1
0	0	0	1	1	0	1	1	0	1	0	0	1	1
0	0	0	1	1	0	1	1	0	1	0	1	0	1
0	0	0	1	1	0	1	1	0	1	0	1	1	1
0	0	0	1	1	0	1	1	0	1	1	0	0	1
0	0	0	1	1	0	1	1	0	1	1	0	1	1
0	0	0	1	1	0	1	1	0	1	1	1	0	1
0	0	0	1	1	0	1	1	0	1	1	1	1	1
0	0	0	1	1	0	1	1	1	0	0	0	0	1
0	0	0	1	1	0	1	1	1	0	0	0	1	1
0	0	0	1	1	0	1	1	1	0	0	1	0	1
0	0	0	1	1	0	1	1	1	0	0	1	1	1
0	0	0	1	1	0	1	1	1	0	1	0	0	1
0	0	0	1	1	0	1	1	1	0	1	0	1	1
0	0	0	1	1	0	1	1	1	0	1	1	0	1

0	0	0	1	1	0	1	1	1	0	1	1	1	1
0	0	0	1	1	0	1	1	1	1	0	0	0	1
0	0	0	1	1	0	1	1	1	1	0	0	1	1
0	0	0	1	1	0	1	1	1	1	0	1	0	1
0	0	0	1	1	0	1	1	1	1	0	1	1	1
0	0	0	1	1	0	1	1	1	1	1	0	0	1
0	0	0	1	1	0	1	1	1	1	1	0	1	1
0	0	0	1	1	0	1	1	1	1	1	1	0	1
0	0	0	1	1	0	1	1	1	1	1	1	1	1
0	0	0	1	1	1	0	0	0	0	0	0	0	1
0	0	0	1	1	1	0	0	0	0	0	0	1	1
0	0	0	1	1	1	0	0	0	0	0	1	0	1
0	0	0	1	1	1	0	0	0	0	0	1	1	1
0	0	0	1	1	1	0	0	0	0	1	0	0	1
0	0	0	1	1	1	0	0	0	0	1	0	1	1
0	0	0	1	1	1	0	0	0	0	1	1	0	1
0	0	0	1	1	1	0	0	0	0	1	1	1	1
0	0	0	1	1	1	0	0	0	1	0	0	0	1
0	0	0	1	1	1	0	0	0	1	0	0	1	1
0	0	0	1	1	1	0	0	0	1	0	1	0	1
0	0	0	1	1	1	0	0	0	1	0	1	1	1
0	0	0	1	1	1	0	0	0	1	1	0	0	1
0	0	0	1	1	1	0	0	0	1	1	0	1	1
0	0	0	1	1	1	0	0	0	1	1	1	0	1
0	0	0	1	1	1	0	0	0	1	1	1	1	1
0	0	0	1	1	1	0	0	1	0	0	0	0	1
0	0	0	1	1	1	0	0	1	0	0	0	1	1
0	0	0	1	1	1	0	0	1	0	0	1	0	1
0	0	0	1	1	1	0	0	1	0	0	1	1	1
0	0	0	1	1	1	0	0	1	0	1	0	0	1
0	0	0	1	1	1	0	0	1	0	1	0	1	1
0	0	0	1	1	1	0	0	1	0	1	1	0	1
0	0	0	1	1	1	0	0	1	0	1	1	1	1
0	0	0	1	1	1	0	0	1	1	0	0	0	1
0	0	0	1	1	1	0	0	1	1	0	0	1	1
0	0	0	1	1	1	0	0	1	1	0	1	0	1
0	0	0	1	1	1	0	0	1	1	0	1	1	1
0	0	0	1	1	1	0	0	1	1	1	0	0	1
0	0	0	1	1	1	0	0	1	1	1	0	1	1
0	0	0	1	1	1	0	0	1	1	1	1	0	1
0	0	0	1	1	1	0	0	1	1	1	1	1	1
0	0	0	1	1	1	0	1	0	0	0	0	0	1
0	0	0	1	1	1	0	1	0	0	0	0	1	1
0	0	0	1	1	1	0	1	0	0	0	1	0	1
0	0	0	1	1	1	0	1	0	0	0	1	1	1
0	0	0	1	1	1	0	1	0	0	1	0	0	1

0	0	0	1	1	1	0	1	0	0	1	0	1	1
0	0	0	1	1	1	0	1	0	0	1	1	0	1
0	0	0	1	1	1	0	1	0	0	1	1	1	1
0	0	0	1	1	1	0	1	0	1	0	0	0	1
0	0	0	1	1	1	0	1	0	1	0	0	1	1
0	0	0	1	1	1	0	1	0	1	0	1	0	1
0	0	0	1	1	1	0	1	0	1	0	1	1	1
0	0	0	1	1	1	0	1	0	1	1	0	0	1
0	0	0	1	1	1	0	1	0	1	1	0	1	1
0	0	0	1	1	1	0	1	0	1	1	1	0	1
0	0	0	1	1	1	0	1	0	1	1	1	1	1
0	0	0	1	1	1	0	1	1	0	0	0	0	1
0	0	0	1	1	1	0	1	1	0	0	0	1	1
0	0	0	1	1	1	0	1	1	0	0	1	0	1
0	0	0	1	1	1	0	1	1	0	0	1	1	1
0	0	0	1	1	1	0	1	1	0	1	0	0	1
0	0	0	1	1	1	0	1	1	0	1	0	1	1
0	0	0	1	1	1	0	1	1	0	1	1	0	1
0	0	0	1	1	1	0	1	1	0	1	1	1	1
0	0	0	1	1	1	0	1	1	1	0	0	0	1
0	0	0	1	1	1	0	1	1	1	0	0	1	1
0	0	0	1	1	1	0	1	1	1	0	1	0	1
0	0	0	1	1	1	0	1	1	1	0	1	1	1
0	0	0	1	1	1	0	1	1	1	1	0	0	1
0	0	0	1	1	1	0	1	1	1	1	0	1	1
0	0	0	1	1	1	0	1	1	1	1	1	0	1
0	0	0	1	1	1	0	1	1	1	1	1	1	1
0	0	0	1	1	1	1	0	0	0	0	0	0	1
0	0	0	1	1	1	1	0	0	0	0	0	1	1
0	0	0	1	1	1	1	0	0	0	0	1	0	1
0	0	0	1	1	1	1	0	0	0	0	1	1	1
0	0	0	1	1	1	1	0	0	0	1	0	0	1
0	0	0	1	1	1	1	0	0	0	1	0	1	1
0	0	0	1	1	1	1	0	0	0	1	1	0	1
0	0	0	1	1	1	1	0	0	0	1	1	1	1
0	0	0	1	1	1	1	0	0	1	0	0	0	1
0	0	0	1	1	1	1	0	0	1	0	0	1	1
0	0	0	1	1	1	1	0	0	1	0	1	0	1
0	0	0	1	1	1	1	0	0	1	0	1	1	1
0	0	0	1	1	1	1	0	0	1	1	0	0	1
0	0	0	1	1	1	1	0	0	1	1	0	1	1
0	0	0	1	1	1	1	0	0	1	1	1	0	1
0	0	0	1	1	1	1	0	0	1	1	1	1	1
0	0	0	1	1	1	1	0	1	0	0	0	0	1
0	0	0	1	1	1	1	0	1	0	0	0	1	1
0	0	0	1	1	1	1	0	1	0	0	1	0	1

0	0	0	1	1	1	1	0	1	0	0	1	1	1
0	0	0	1	1	1	1	0	1	0	1	0	0	1
0	0	0	1	1	1	1	0	1	0	1	0	1	1
0	0	0	1	1	1	1	0	1	0	1	1	0	1
0	0	0	1	1	1	1	0	1	0	1	1	1	1
0	0	0	1	1	1	1	0	1	1	0	0	0	1
0	0	0	1	1	1	1	0	1	1	0	0	1	1
0	0	0	1	1	1	1	0	1	1	0	1	0	1
0	0	0	1	1	1	1	0	1	1	0	1	1	1
0	0	0	1	1	1	1	0	1	1	1	0	0	1
0	0	0	1	1	1	1	0	1	1	1	0	1	1
0	0	0	1	1	1	1	0	1	1	1	1	0	1
0	0	0	1	1	1	1	0	1	1	1	1	1	1
0	0	0	1	1	1	1	1	0	0	1	0	0	1
0	0	0	1	1	1	1	1	0	0	0	0	1	1
0	0	0	1	1	1	1	1	0	0	0	1	0	1
0	0	0	1	1	1	1	1	0	0	0	1	1	1
0	0	0	1	1	1	1	1	0	0	0	0	0	1
0	0	0	1	1	1	1	1	0	0	1	0	1	1
0	0	0	1	1	1	1	1	0	0	1	1	0	1
0	0	0	1	1	1	1	1	0	0	1	1	1	1
0	0	0	1	1	1	1	1	0	1	1	0	0	1
0	0	0	1	1	1	1	1	0	1	0	0	1	1
0	0	0	1	1	1	1	1	0	1	0	1	0	1
0	0	0	1	1	1	1	1	0	1	0	1	1	1
0	0	0	1	1	1	1	1	0	1	0	0	0	1
0	0	0	1	1	1	1	1	0	1	1	0	1	1
0	0	0	1	1	1	1	1	0	1	1	1	0	1
0	0	0	1	1	1	1	1	0	1	1	1	1	1
0	0	0	1	1	1	1	1	1	0	1	0	0	1
0	0	0	1	1	1	1	1	1	0	0	0	1	1
0	0	0	1	1	1	1	1	1	0	0	1	0	1
0	0	0	1	1	1	1	1	1	0	0	1	1	1
0	0	0	1	1	1	1	1	1	0	0	0	0	1
0	0	0	1	1	1	1	1	1	0	1	0	1	1
0	0	0	1	1	1	1	1	1	0	1	1	0	1
0	0	0	1	1	1	1	1	1	0	1	1	1	1
0	0	0	1	1	1	1	1	1	1	1	0	0	1
0	0	0	1	1	1	1	1	1	1	0	0	1	1
0	0	0	1	1	1	1	1	1	1	0	1	0	1
0	0	0	1	1	1	1	1	1	1	0	1	1	1
0	0	0	1	1	1	1	1	1	1	0	0	0	1
0	0	0	1	1	1	1	1	1	1	1	0	1	1
0	0	0	1	1	1	1	1	1	1	1	1	0	1
0	0	0	1	1	1	1	1	1	1	1	1	1	1
0	0	1	0	0	0	0	0	0	0	0	0	0	1

0	0	1	0	0	0	0	0	0	0	0	0	1	1
0	0	1	0	0	0	0	0	0	0	0	1	0	1
0	0	1	0	0	0	0	0	0	0	0	1	1	1
0	0	1	0	0	0	0	0	0	0	1	0	0	1
0	0	1	0	0	0	0	0	0	0	1	0	1	1
0	0	1	0	0	0	0	0	0	0	1	1	0	1
0	0	1	0	0	0	0	0	0	0	1	1	1	1
0	0	1	0	0	0	0	0	0	1	0	0	0	1
0	0	1	0	0	0	0	0	0	1	0	0	1	1
0	0	1	0	0	0	0	0	0	1	0	1	0	1
0	0	1	0	0	0	0	0	0	1	0	1	1	1
0	0	1	0	0	0	0	0	0	1	1	0	0	1
0	0	1	0	0	0	0	0	0	1	1	0	1	1
0	0	1	0	0	0	0	0	0	1	1	1	0	1
0	0	1	0	0	0	0	0	0	1	1	1	1	1
0	0	1	0	0	0	0	0	1	0	0	0	0	1
0	0	1	0	0	0	0	0	1	0	0	0	1	1
0	0	1	0	0	0	0	0	1	0	0	1	0	1
0	0	1	0	0	0	0	0	1	0	0	1	1	1
0	0	1	0	0	0	0	0	1	0	1	0	0	1
0	0	1	0	0	0	0	0	1	0	1	0	1	1
0	0	1	0	0	0	0	0	1	0	1	1	0	1
0	0	1	0	0	0	0	0	1	0	1	1	1	1
0	0	1	0	0	0	0	0	1	1	0	0	0	1
0	0	1	0	0	0	0	0	1	1	0	0	1	1
0	0	1	0	0	0	0	0	1	1	0	1	0	1
0	0	1	0	0	0	0	0	1	1	0	1	1	1
0	0	1	0	0	0	0	0	1	1	1	0	0	1
0	0	1	0	0	0	0	0	1	1	1	0	1	1
0	0	1	0	0	0	0	0	1	1	1	1	0	1
0	0	1	0	0	0	0	0	1	1	1	1	1	1
0	0	1	0	0	0	0	1	0	0	0	0	0	1
0	0	1	0	0	0	0	1	0	0	0	0	1	1
0	0	1	0	0	0	0	1	0	0	0	1	0	1
0	0	1	0	0	0	0	1	0	0	0	1	1	1
0	0	1	0	0	0	0	1	0	0	1	0	0	1
0	0	1	0	0	0	0	1	0	0	1	0	1	1
0	0	1	0	0	0	0	1	0	0	1	1	0	1
0	0	1	0	0	0	0	1	0	0	1	1	1	1
0	0	1	0	0	0	0	1	0	1	0	0	0	1
0	0	1	0	0	0	0	1	0	1	0	0	1	1
0	0	1	0	0	0	0	1	0	1	0	1	0	1
0	0	1	0	0	0	0	1	0	1	0	1	1	1
0	0	1	0	0	0	0	1	0	1	1	0	0	1
0	0	1	0	0	0	0	1	0	1	1	0	1	1
0	0	1	0	0	0	0	1	0	1	1	1	0	1

0	0	1	0	0	0	0	1	0	1	1	1	1	1
0	0	1	0	0	0	0	1	1	0	0	0	0	1
0	0	1	0	0	0	0	1	1	0	0	0	1	1
0	0	1	0	0	0	0	1	1	0	0	1	0	1
0	0	1	0	0	0	0	1	1	0	0	1	1	1
0	0	1	0	0	0	0	1	1	0	1	0	0	1
0	0	1	0	0	0	0	1	1	0	1	0	1	1
0	0	1	0	0	0	0	1	1	0	1	1	0	1
0	0	1	0	0	0	0	1	1	0	1	1	1	1
0	0	1	0	0	0	0	1	1	1	0	0	0	1
0	0	1	0	0	0	0	1	1	1	0	0	1	1
0	0	1	0	0	0	0	1	1	1	0	1	0	1
0	0	1	0	0	0	0	1	1	1	0	1	1	1
0	0	1	0	0	0	0	1	1	1	1	0	0	1
0	0	1	0	0	0	0	1	1	1	1	0	1	1
0	0	1	0	0	0	0	1	1	1	1	1	0	1
0	0	1	0	0	0	0	1	1	1	1	1	1	1
0	0	1	0	0	0	1	0	0	0	0	0	0	1
0	0	1	0	0	0	1	0	0	0	0	0	1	1
0	0	1	0	0	0	1	0	0	0	0	1	0	1
0	0	1	0	0	0	1	0	0	0	0	1	1	1
0	0	1	0	0	0	1	0	0	0	1	0	0	1
0	0	1	0	0	0	1	0	0	0	1	0	1	1
0	0	1	0	0	0	1	0	0	0	1	1	0	1
0	0	1	0	0	0	1	0	0	0	1	1	1	1
0	0	1	0	0	0	1	0	0	1	0	0	0	1
0	0	1	0	0	0	1	0	0	1	0	0	1	1
0	0	1	0	0	0	1	0	0	1	0	1	0	1
0	0	1	0	0	0	1	0	0	1	0	1	1	1
0	0	1	0	0	0	1	0	0	1	1	0	0	1
0	0	1	0	0	0	1	0	0	1	1	0	1	1
0	0	1	0	0	0	1	0	0	1	1	1	0	1
0	0	1	0	0	0	1	0	0	1	1	1	1	1
0	0	1	0	0	0	1	0	1	0	0	0	0	1
0	0	1	0	0	0	1	0	1	0	0	0	1	1
0	0	1	0	0	0	1	0	1	0	0	1	0	1
0	0	1	0	0	0	1	0	1	0	0	1	1	1
0	0	1	0	0	0	1	0	1	0	1	0	0	1
0	0	1	0	0	0	1	0	1	0	1	0	1	1
0	0	1	0	0	0	1	0	1	0	1	1	0	1
0	0	1	0	0	0	1	0	1	0	1	1	1	1
0	0	1	0	0	0	1	0	1	1	0	0	0	1
0	0	1	0	0	0	1	0	1	1	0	0	1	1
0	0	1	0	0	0	1	0	1	1	0	1	0	1
0	0	1	0	0	0	1	0	1	1	0	1	1	1
0	0	1	0	0	0	1	0	1	1	1	0	0	1

0	0	1	0	0	0	1	0	1	1	1	0	1	1
0	0	1	0	0	0	1	0	1	1	1	1	0	1
0	0	1	0	0	0	1	0	1	1	1	1	1	1
0	0	1	0	0	0	1	1	0	0	0	0	0	1
0	0	1	0	0	0	1	1	0	0	0	0	1	1
0	0	1	0	0	0	1	1	0	0	0	1	0	1
0	0	1	0	0	0	1	1	0	0	0	1	1	1
0	0	1	0	0	0	1	1	0	0	1	0	0	1
0	0	1	0	0	0	1	1	0	0	1	0	1	1
0	0	1	0	0	0	1	1	0	0	1	1	0	1
0	0	1	0	0	0	1	1	0	0	1	1	1	1
0	0	1	0	0	0	1	1	0	1	0	0	0	1
0	0	1	0	0	0	1	1	0	1	0	0	1	1
0	0	1	0	0	0	1	1	0	1	0	1	0	1
0	0	1	0	0	0	1	1	0	1	0	1	1	1
0	0	1	0	0	0	1	1	0	1	1	0	0	1
0	0	1	0	0	0	1	1	0	1	1	0	1	1
0	0	1	0	0	0	1	1	0	1	1	1	0	1
0	0	1	0	0	0	1	1	0	1	1	1	1	1
0	0	1	0	0	0	1	1	1	0	0	0	0	1
0	0	1	0	0	0	1	1	1	0	0	0	1	1
0	0	1	0	0	0	1	1	1	0	0	1	0	1
0	0	1	0	0	0	1	1	1	0	0	1	1	1
0	0	1	0	0	0	1	1	1	0	1	0	0	1
0	0	1	0	0	0	1	1	1	0	1	0	1	1
0	0	1	0	0	0	1	1	1	0	1	1	0	1
0	0	1	0	0	0	1	1	1	0	1	1	1	1
0	0	1	0	0	0	1	1	1	1	0	0	0	1
0	0	1	0	0	0	1	1	1	1	0	0	1	1
0	0	1	0	0	0	1	1	1	1	0	1	0	1
0	0	1	0	0	0	1	1	1	1	0	1	1	1
0	0	1	0	0	0	1	1	1	1	1	0	0	1
0	0	1	0	0	0	1	1	1	1	1	0	1	1
0	0	1	0	0	0	1	1	1	1	1	1	0	1
0	0	1	0	0	0	1	1	1	1	1	1	1	1
0	0	1	0	0	1	0	0	0	0	0	0	0	1
0	0	1	0	0	1	0	0	0	0	0	0	1	1
0	0	1	0	0	1	0	0	0	0	0	1	0	1
0	0	1	0	0	1	0	0	0	0	0	1	1	1
0	0	1	0	0	1	0	0	0	0	1	0	0	1
0	0	1	0	0	1	0	0	0	0	1	0	1	1
0	0	1	0	0	1	0	0	0	0	1	1	0	1
0	0	1	0	0	1	0	0	0	0	1	1	1	1
0	0	1	0	0	1	0	0	0	1	0	0	0	1
0	0	1	0	0	1	0	0	0	1	0	0	1	1
0	0	1	0	0	1	0	0	0	1	0	1	0	1

0	0	1	0	0	1	0	0	0	1	0	1	1	1
0	0	1	0	0	1	0	0	0	1	1	0	0	1
0	0	1	0	0	1	0	0	0	1	1	0	1	1
0	0	1	0	0	1	0	0	0	1	1	1	0	1
0	0	1	0	0	1	0	0	0	1	1	1	1	1
0	0	1	0	0	1	0	0	1	0	0	0	0	1
0	0	1	0	0	1	0	0	1	0	0	0	1	1
0	0	1	0	0	1	0	0	1	0	0	1	0	1
0	0	1	0	0	1	0	0	1	0	0	1	1	1
0	0	1	0	0	1	0	0	1	0	1	0	0	1
0	0	1	0	0	1	0	0	1	0	1	0	1	1
0	0	1	0	0	1	0	0	1	0	1	1	0	1
0	0	1	0	0	1	0	0	1	0	1	1	1	1
0	0	1	0	0	1	0	0	1	1	0	0	0	1
0	0	1	0	0	1	0	0	1	1	0	0	1	1
0	0	1	0	0	1	0	0	1	1	0	1	0	1
0	0	1	0	0	1	0	0	1	1	0	1	1	1
0	0	1	0	0	1	0	0	1	1	1	0	0	1
0	0	1	0	0	1	0	0	1	1	1	0	1	1
0	0	1	0	0	1	0	0	1	1	1	1	0	1
0	0	1	0	0	1	0	0	1	1	1	1	1	1
0	0	1	0	0	1	0	1	0	0	0	0	0	1
0	0	1	0	0	1	0	1	0	0	0	0	1	1
0	0	1	0	0	1	0	1	0	0	0	1	0	1
0	0	1	0	0	1	0	1	0	0	0	1	1	1
0	0	1	0	0	1	0	1	0	0	1	0	0	1
0	0	1	0	0	1	0	1	0	0	1	0	1	1
0	0	1	0	0	1	0	1	0	0	1	1	0	1
0	0	1	0	0	1	0	1	0	0	1	1	1	1
0	0	1	0	0	1	0	1	0	1	0	0	0	1
0	0	1	0	0	1	0	1	0	1	0	0	1	1
0	0	1	0	0	1	0	1	0	1	0	1	0	1
0	0	1	0	0	1	0	1	0	1	0	1	1	1
0	0	1	0	0	1	0	1	0	1	1	0	0	1
0	0	1	0	0	1	0	1	0	1	1	0	1	1
0	0	1	0	0	1	0	1	0	1	1	1	0	1
0	0	1	0	0	1	0	1	0	1	1	1	1	1
0	0	1	0	0	1	0	1	1	0	0	0	0	1
0	0	1	0	0	1	0	1	1	0	0	0	1	1
0	0	1	0	0	1	0	1	1	0	0	1	0	1
0	0	1	0	0	1	0	1	1	0	0	1	1	1
0	0	1	0	0	1	0	1	1	0	1	0	0	1
0	0	1	0	0	1	0	1	1	0	1	0	1	1
0	0	1	0	0	1	0	1	1	0	1	1	0	1
0	0	1	0	0	1	0	1	1	0	1	1	1	1
0	0	1	0	0	1	0	1	1	1	0	0	0	1

0	0	1	0	0	1	0	1	1	1	0	0	1	1
0	0	1	0	0	1	0	1	1	1	0	1	0	1
0	0	1	0	0	1	0	1	1	1	0	1	1	1
0	0	1	0	0	1	0	1	1	1	1	0	0	1
0	0	1	0	0	1	0	1	1	1	1	0	1	1
0	0	1	0	0	1	0	1	1	1	1	1	0	1
0	0	1	0	0	1	0	1	1	1	1	1	1	1
0	0	1	0	0	1	1	0	0	0	0	0	0	1
0	0	1	0	0	1	1	0	0	0	0	0	1	1
0	0	1	0	0	1	1	0	0	0	0	1	0	1
0	0	1	0	0	1	1	0	0	0	0	1	1	1
0	0	1	0	0	1	1	0	0	0	1	0	0	1
0	0	1	0	0	1	1	0	0	0	1	0	1	1
0	0	1	0	0	1	1	0	0	0	1	1	0	1
0	0	1	0	0	1	1	0	0	0	1	1	1	1
0	0	1	0	0	1	1	0	0	1	0	0	0	1
0	0	1	0	0	1	1	0	0	1	0	0	1	1
0	0	1	0	0	1	1	0	0	1	0	1	0	1
0	0	1	0	0	1	1	0	0	1	0	1	1	1
0	0	1	0	0	1	1	0	0	1	1	0	0	1
0	0	1	0	0	1	1	0	0	1	1	0	1	1
0	0	1	0	0	1	1	0	0	1	1	1	0	1
0	0	1	0	0	1	1	0	0	1	1	1	1	1
0	0	1	0	0	1	1	0	1	0	0	0	0	1
0	0	1	0	0	1	1	0	1	0	0	0	1	1
0	0	1	0	0	1	1	0	1	0	0	1	0	1
0	0	1	0	0	1	1	0	1	0	0	1	1	1
0	0	1	0	0	1	1	0	1	0	1	0	0	1
0	0	1	0	0	1	1	0	1	0	1	0	1	1
0	0	1	0	0	1	1	0	1	0	1	1	0	1
0	0	1	0	0	1	1	0	1	0	1	1	1	1
0	0	1	0	0	1	1	0	1	1	0	0	0	1
0	0	1	0	0	1	1	0	1	1	0	0	1	1
0	0	1	0	0	1	1	0	1	1	0	1	0	1
0	0	1	0	0	1	1	0	1	1	0	1	1	1
0	0	1	0	0	1	1	0	1	1	1	0	0	1
0	0	1	0	0	1	1	0	1	1	1	0	1	1
0	0	1	0	0	1	1	0	1	1	1	1	0	1
0	0	1	0	0	1	1	0	1	1	1	1	1	1
0	0	1	0	0	1	1	1	0	0	1	0	0	1
0	0	1	0	0	1	1	1	0	0	0	0	1	1
0	0	1	0	0	1	1	1	0	0	0	1	0	1
0	0	1	0	0	1	1	1	0	0	0	1	1	1
0	0	1	0	0	1	1	1	0	0	0	0	0	1
0	0	1	0	0	1	1	1	0	0	1	0	1	1
0	0	1	0	0	1	1	1	0	0	1	1	0	1

0	0	1	0	0	1	1	1	0	0	1	1	1	1
0	0	1	0	0	1	1	1	0	1	1	0	0	1
0	0	1	0	0	1	1	1	0	1	0	0	1	1
0	0	1	0	0	1	1	1	0	1	0	1	0	1
0	0	1	0	0	1	1	1	0	1	0	1	1	1
0	0	1	0	0	1	1	1	0	1	0	0	0	1
0	0	1	0	0	1	1	1	0	1	1	0	1	1
0	0	1	0	0	1	1	1	0	1	1	1	0	1
0	0	1	0	0	1	1	1	0	1	1	1	1	1
0	0	1	0	0	1	1	1	1	0	1	0	0	1
0	0	1	0	0	1	1	1	1	0	0	0	1	1
0	0	1	0	0	1	1	1	1	0	0	1	0	1
0	0	1	0	0	1	1	1	1	0	0	1	1	1
0	0	1	0	0	1	1	1	1	0	0	0	0	1
0	0	1	0	0	1	1	1	1	0	1	0	1	1
0	0	1	0	0	1	1	1	1	0	1	1	0	1
0	0	1	0	0	1	1	1	1	0	1	1	1	1
0	0	1	0	0	1	1	1	1	1	1	0	0	1
0	0	1	0	0	1	1	1	1	1	0	0	1	1
0	0	1	0	0	1	1	1	1	1	0	1	0	1
0	0	1	0	0	1	1	1	1	1	0	1	1	1
0	0	1	0	0	1	1	1	1	1	0	0	0	1
0	0	1	0	0	1	1	1	1	1	1	0	1	1
0	0	1	0	0	1	1	1	1	1	1	1	0	1
0	0	1	0	0	1	1	1	1	1	1	1	1	1
0	0	1	0	1	0	0	0	0	0	0	0	0	1
0	0	1	0	1	0	0	0	0	0	0	0	1	1
0	0	1	0	1	0	0	0	0	0	0	1	0	1
0	0	1	0	1	0	0	0	0	0	0	1	1	1
0	0	1	0	1	0	0	0	0	0	1	0	0	1
0	0	1	0	1	0	0	0	0	0	1	0	1	1
0	0	1	0	1	0	0	0	0	0	1	1	0	1
0	0	1	0	1	0	0	0	0	0	1	1	1	1
0	0	1	0	1	0	0	0	0	1	0	0	0	1
0	0	1	0	1	0	0	0	0	1	0	0	1	1
0	0	1	0	1	0	0	0	0	1	0	1	0	1
0	0	1	0	1	0	0	0	0	1	0	1	1	1
0	0	1	0	1	0	0	0	0	1	1	0	0	1
0	0	1	0	1	0	0	0	0	1	1	0	1	1
0	0	1	0	1	0	0	0	0	1	1	1	0	1
0	0	1	0	1	0	0	0	0	1	1	1	1	1
0	0	1	0	1	0	0	0	1	0	0	0	0	1
0	0	1	0	1	0	0	0	1	0	0	0	1	1
0	0	1	0	1	0	0	0	1	0	0	1	0	1
0	0	1	0	1	0	0	0	1	0	0	1	1	1
0	0	1	0	1	0	0	0	1	0	1	0	0	1

0	0	1	0	1	0	0	0	1	0	1	0	1	1
0	0	1	0	1	0	0	0	1	0	1	1	0	1
0	0	1	0	1	0	0	0	1	0	1	1	1	1
0	0	1	0	1	0	0	0	1	1	0	0	0	1
0	0	1	0	1	0	0	0	1	1	0	0	1	1
0	0	1	0	1	0	0	0	1	1	0	1	0	1
0	0	1	0	1	0	0	0	1	1	0	1	1	1
0	0	1	0	1	0	0	0	1	1	1	0	0	1
0	0	1	0	1	0	0	0	1	1	1	0	1	1
0	0	1	0	1	0	0	0	1	1	1	1	0	1
0	0	1	0	1	0	0	0	1	1	1	1	1	1
0	0	1	0	1	0	0	1	0	0	0	0	0	1
0	0	1	0	1	0	0	1	0	0	0	0	1	1
0	0	1	0	1	0	0	1	0	0	0	1	0	1
0	0	1	0	1	0	0	1	0	0	0	1	1	1
0	0	1	0	1	0	0	1	0	0	1	0	0	1
0	0	1	0	1	0	0	1	0	0	1	0	1	1
0	0	1	0	1	0	0	1	0	0	1	1	0	1
0	0	1	0	1	0	0	1	0	0	1	1	1	1
0	0	1	0	1	0	0	1	0	1	0	0	0	1
0	0	1	0	1	0	0	1	0	1	0	0	1	1
0	0	1	0	1	0	0	1	0	1	0	1	0	1
0	0	1	0	1	0	0	1	0	1	0	1	1	1
0	0	1	0	1	0	0	1	0	1	1	0	0	1
0	0	1	0	1	0	0	1	0	1	1	0	1	1
0	0	1	0	1	0	0	1	0	1	1	1	0	1
0	0	1	0	1	0	0	1	0	1	1	1	1	1
0	0	1	0	1	0	0	1	1	0	0	0	0	1
0	0	1	0	1	0	0	1	1	0	0	0	1	1
0	0	1	0	1	0	0	1	1	0	0	1	0	1
0	0	1	0	1	0	0	1	1	0	0	1	1	1
0	0	1	0	1	0	0	1	1	0	1	0	0	1
0	0	1	0	1	0	0	1	1	0	1	0	1	1
0	0	1	0	1	0	0	1	1	0	1	1	0	1
0	0	1	0	1	0	0	1	1	0	1	1	1	1
0	0	1	0	1	0	0	1	1	1	0	0	0	1
0	0	1	0	1	0	0	1	1	1	0	0	1	1
0	0	1	0	1	0	0	1	1	1	0	1	0	1
0	0	1	0	1	0	0	1	1	1	0	1	1	1
0	0	1	0	1	0	0	1	1	1	1	0	0	1
0	0	1	0	1	0	0	1	1	1	1	0	1	1
0	0	1	0	1	0	0	1	1	1	1	1	0	1
0	0	1	0	1	0	0	1	1	1	1	1	1	1
0	0	1	0	1	0	1	0	0	0	0	0	0	1
0	0	1	0	1	0	1	0	0	0	0	0	1	1
0	0	1	0	1	0	1	0	0	0	0	1	0	1

0	0	1	0	1	0	1	0	0	0	0	1	1	1
0	0	1	0	1	0	1	0	0	0	1	0	0	1
0	0	1	0	1	0	1	0	0	0	1	0	1	1
0	0	1	0	1	0	1	0	0	0	1	1	0	1
0	0	1	0	1	0	1	0	0	0	1	1	1	1
0	0	1	0	1	0	1	0	0	1	0	0	0	1
0	0	1	0	1	0	1	0	0	1	0	0	1	1
0	0	1	0	1	0	1	0	0	1	0	1	0	1
0	0	1	0	1	0	1	0	0	1	0	1	1	1
0	0	1	0	1	0	1	0	0	1	1	0	0	1
0	0	1	0	1	0	1	0	0	1	1	0	1	1
0	0	1	0	1	0	1	0	0	1	1	1	0	1
0	0	1	0	1	0	1	0	0	1	1	1	1	1
0	0	1	0	1	0	1	0	1	0	0	0	0	1
0	0	1	0	1	0	1	0	1	0	0	0	1	1
0	0	1	0	1	0	1	0	1	0	0	1	0	1
0	0	1	0	1	0	1	0	1	0	0	1	1	1
0	0	1	0	1	0	1	0	1	0	1	0	0	1
0	0	1	0	1	0	1	0	1	0	1	0	1	1
0	0	1	0	1	0	1	0	1	0	1	1	0	1
0	0	1	0	1	0	1	0	1	0	1	1	1	1
0	0	1	0	1	0	1	0	1	1	0	0	0	1
0	0	1	0	1	0	1	0	1	1	0	0	1	1
0	0	1	0	1	0	1	0	1	1	0	1	0	1
0	0	1	0	1	0	1	0	1	1	0	1	1	1
0	0	1	0	1	0	1	0	1	1	1	0	0	1
0	0	1	0	1	0	1	0	1	1	1	0	1	1
0	0	1	0	1	0	1	0	1	1	1	1	0	1
0	0	1	0	1	0	1	0	1	1	1	1	1	1
0	0	1	0	1	0	1	1	0	0	0	0	0	1
0	0	1	0	1	0	1	1	0	0	0	0	1	1
0	0	1	0	1	0	1	1	0	0	0	1	0	1
0	0	1	0	1	0	1	1	0	0	0	1	1	1
0	0	1	0	1	0	1	1	0	0	1	0	0	1
0	0	1	0	1	0	1	1	0	0	1	0	1	1
0	0	1	0	1	0	1	1	0	0	1	1	0	1
0	0	1	0	1	0	1	1	0	0	1	1	1	1
0	0	1	0	1	0	1	1	0	1	0	0	0	1
0	0	1	0	1	0	1	1	0	1	0	0	1	1
0	0	1	0	1	0	1	1	0	1	0	1	0	1
0	0	1	0	1	0	1	1	0	1	0	1	1	1
0	0	1	0	1	0	1	1	0	1	1	0	0	1
0	0	1	0	1	0	1	1	0	1	1	0	1	1
0	0	1	0	1	0	1	1	0	1	1	1	0	1
0	0	1	0	1	0	1	1	0	1	1	1	1	1
0	0	1	0	1	0	1	1	1	0	0	0	0	1

0	0	1	0	1	0	1	1	1	0	0	0	1	1
0	0	1	0	1	0	1	1	1	0	0	1	0	1
0	0	1	0	1	0	1	1	1	0	0	1	1	1
0	0	1	0	1	0	1	1	1	0	1	0	0	1
0	0	1	0	1	0	1	1	1	0	1	0	1	1
0	0	1	0	1	0	1	1	1	0	1	1	0	1
0	0	1	0	1	0	1	1	1	0	1	1	1	1
0	0	1	0	1	0	1	1	1	1	0	0	0	1
0	0	1	0	1	0	1	1	1	1	0	0	1	1
0	0	1	0	1	0	1	1	1	1	0	1	0	1
0	0	1	0	1	0	1	1	1	1	0	1	1	1
0	0	1	0	1	0	1	1	1	1	1	0	0	1
0	0	1	0	1	0	1	1	1	1	1	0	1	1
0	0	1	0	1	0	1	1	1	1	1	1	0	1
0	0	1	0	1	0	1	1	1	1	1	1	1	1
0	0	1	0	1	1	0	0	0	0	0	0	0	1
0	0	1	0	1	1	0	0	0	0	0	0	1	1
0	0	1	0	1	1	0	0	0	0	0	1	0	1
0	0	1	0	1	1	0	0	0	0	0	1	1	1
0	0	1	0	1	1	0	0	0	0	1	0	0	1
0	0	1	0	1	1	0	0	0	0	1	0	1	1
0	0	1	0	1	1	0	0	0	0	1	1	0	1
0	0	1	0	1	1	0	0	0	0	1	1	1	1
0	0	1	0	1	1	0	0	0	1	0	0	0	1
0	0	1	0	1	1	0	0	0	1	0	0	1	1
0	0	1	0	1	1	0	0	0	1	0	1	0	1
0	0	1	0	1	1	0	0	0	1	0	1	1	1
0	0	1	0	1	1	0	0	0	1	1	0	0	1
0	0	1	0	1	1	0	0	0	1	1	0	1	1
0	0	1	0	1	1	0	0	0	1	1	1	0	1
0	0	1	0	1	1	0	0	0	1	1	1	1	1
0	0	1	0	1	1	0	0	1	0	0	0	0	1
0	0	1	0	1	1	0	0	1	0	0	0	1	1
0	0	1	0	1	1	0	0	1	0	0	1	0	1
0	0	1	0	1	1	0	0	1	0	0	1	1	1
0	0	1	0	1	1	0	0	1	0	1	0	0	1
0	0	1	0	1	1	0	0	1	0	1	0	1	1
0	0	1	0	1	1	0	0	1	0	1	1	0	1
0	0	1	0	1	1	0	0	1	0	1	1	1	1
0	0	1	0	1	1	0	0	1	1	0	0	0	1
0	0	1	0	1	1	0	0	1	1	0	0	1	1
0	0	1	0	1	1	0	0	1	1	0	1	0	1
0	0	1	0	1	1	0	0	1	1	0	1	1	1
0	0	1	0	1	1	0	0	1	1	1	0	0	1
0	0	1	0	1	1	0	0	1	1	1	0	1	1
0	0	1	0	1	1	0	0	1	1	1	1	0	1

0	0	1	0	1	1	0	0	1	1	1	1	1	1
0	0	1	0	1	1	0	1	0	0	0	0	0	1
0	0	1	0	1	1	0	1	0	0	0	0	1	1
0	0	1	0	1	1	0	1	0	0	0	1	0	1
0	0	1	0	1	1	0	1	0	0	0	1	1	1
0	0	1	0	1	1	0	1	0	0	1	0	0	1
0	0	1	0	1	1	0	1	0	0	1	0	1	1
0	0	1	0	1	1	0	1	0	0	1	1	0	1
0	0	1	0	1	1	0	1	0	0	1	1	1	1
0	0	1	0	1	1	0	1	0	1	0	0	0	1
0	0	1	0	1	1	0	1	0	1	0	0	1	1
0	0	1	0	1	1	0	1	0	1	0	1	0	1
0	0	1	0	1	1	0	1	0	1	0	1	1	1
0	0	1	0	1	1	0	1	0	1	1	0	0	1
0	0	1	0	1	1	0	1	0	1	1	0	1	1
0	0	1	0	1	1	0	1	0	1	1	1	0	1
0	0	1	0	1	1	0	1	0	1	1	1	1	1
0	0	1	0	1	1	0	1	1	0	0	0	0	1
0	0	1	0	1	1	0	1	1	0	0	0	1	1
0	0	1	0	1	1	0	1	1	0	0	1	0	1
0	0	1	0	1	1	0	1	1	0	0	1	1	1
0	0	1	0	1	1	0	1	1	0	1	0	0	1
0	0	1	0	1	1	0	1	1	0	1	0	1	1
0	0	1	0	1	1	0	1	1	0	1	1	0	1
0	0	1	0	1	1	0	1	1	0	1	1	1	1
0	0	1	0	1	1	0	1	1	1	0	0	0	1
0	0	1	0	1	1	0	1	1	1	0	0	1	1
0	0	1	0	1	1	0	1	1	1	0	1	0	1
0	0	1	0	1	1	0	1	1	1	0	1	1	1
0	0	1	0	1	1	0	1	1	1	1	0	0	1
0	0	1	0	1	1	0	1	1	1	1	0	1	1
0	0	1	0	1	1	0	1	1	1	1	1	0	1
0	0	1	0	1	1	0	1	1	1	1	1	1	1
0	0	1	0	1	1	1	0	0	0	0	0	0	1
0	0	1	0	1	1	1	0	0	0	0	0	1	1
0	0	1	0	1	1	1	0	0	0	0	1	0	1
0	0	1	0	1	1	1	0	0	0	0	1	1	1
0	0	1	0	1	1	1	0	0	0	1	0	0	1
0	0	1	0	1	1	1	0	0	0	1	0	1	1
0	0	1	0	1	1	1	0	0	0	1	1	0	1
0	0	1	0	1	1	1	0	0	0	1	1	1	1
0	0	1	0	1	1	1	0	0	1	0	0	0	1
0	0	1	0	1	1	1	0	0	1	0	0	1	1
0	0	1	0	1	1	1	0	0	1	0	1	0	1
0	0	1	0	1	1	1	0	0	1	0	1	1	1
0	0	1	0	1	1	1	0	0	1	1	0	0	1

0	0	1	0	1	1	1	0	0	1	1	0	1	1
0	0	1	0	1	1	1	0	0	1	1	1	0	1
0	0	1	0	1	1	1	0	0	1	1	1	1	1
0	0	1	0	1	1	1	0	1	0	0	0	0	1
0	0	1	0	1	1	1	0	1	0	0	0	1	1
0	0	1	0	1	1	1	0	1	0	0	1	0	1
0	0	1	0	1	1	1	0	1	0	0	1	1	1
0	0	1	0	1	1	1	0	1	0	1	0	0	1
0	0	1	0	1	1	1	0	1	0	1	0	1	1
0	0	1	0	1	1	1	0	1	0	1	1	0	1
0	0	1	0	1	1	1	0	1	0	1	1	1	1
0	0	1	0	1	1	1	0	1	1	0	0	0	1
0	0	1	0	1	1	1	0	1	1	0	0	1	1
0	0	1	0	1	1	1	0	1	1	0	1	0	1
0	0	1	0	1	1	1	0	1	1	0	1	1	1
0	0	1	0	1	1	1	0	1	1	1	0	0	1
0	0	1	0	1	1	1	0	1	1	1	0	1	1
0	0	1	0	1	1	1	0	1	1	1	1	0	1
0	0	1	0	1	1	1	0	1	1	1	1	1	1
0	0	1	0	1	1	1	1	0	0	1	0	0	1
0	0	1	0	1	1	1	1	0	0	0	0	1	1
0	0	1	0	1	1	1	1	0	0	0	1	0	1
0	0	1	0	1	1	1	1	0	0	0	1	1	1
0	0	1	0	1	1	1	1	0	0	0	0	0	1
0	0	1	0	1	1	1	1	0	0	1	0	1	1
0	0	1	0	1	1	1	1	0	0	1	1	0	1
0	0	1	0	1	1	1	1	0	0	1	1	1	1
0	0	1	0	1	1	1	1	0	1	1	0	0	1
0	0	1	0	1	1	1	1	0	1	0	0	1	1
0	0	1	0	1	1	1	1	0	1	0	1	0	1
0	0	1	0	1	1	1	1	0	1	0	1	1	1
0	0	1	0	1	1	1	1	0	1	0	0	0	1
0	0	1	0	1	1	1	1	0	1	1	0	1	1
0	0	1	0	1	1	1	1	0	1	1	1	0	1
0	0	1	0	1	1	1	1	0	1	1	1	1	1
0	0	1	0	1	1	1	1	1	0	1	0	0	1
0	0	1	0	1	1	1	1	1	0	0	0	1	1
0	0	1	0	1	1	1	1	1	0	0	1	0	1
0	0	1	0	1	1	1	1	1	0	0	1	1	1
0	0	1	0	1	1	1	1	1	0	0	0	0	1
0	0	1	0	1	1	1	1	1	0	1	0	1	1
0	0	1	0	1	1	1	1	1	0	1	1	0	1
0	0	1	0	1	1	1	1	1	0	1	1	1	1
0	0	1	0	1	1	1	1	1	1	1	0	0	1
0	0	1	0	1	1	1	1	1	1	0	0	1	1
0	0	1	0	1	1	1	1	1	1	0	1	0	1

0	0	1	0	1	1	1	1	1	1	0	1	1	1
0	0	1	0	1	1	1	1	1	1	0	0	0	1
0	0	1	0	1	1	1	1	1	1	1	0	1	1
0	0	1	0	1	1	1	1	1	1	1	1	0	1
0	0	1	0	1	1	1	1	1	1	1	1	1	1
0	0	1	1	0	0	0	0	0	0	0	0	0	1
0	0	1	1	0	0	0	0	0	0	0	0	1	1
0	0	1	1	0	0	0	0	0	0	0	1	0	1
0	0	1	1	0	0	0	0	0	0	0	1	1	1
0	0	1	1	0	0	0	0	0	0	1	0	0	1
0	0	1	1	0	0	0	0	0	0	1	0	1	1
0	0	1	1	0	0	0	0	0	0	1	1	0	1
0	0	1	1	0	0	0	0	0	0	1	1	1	1
0	0	1	1	0	0	0	0	0	1	0	0	0	1
0	0	1	1	0	0	0	0	0	1	0	0	1	1
0	0	1	1	0	0	0	0	0	1	0	1	0	1
0	0	1	1	0	0	0	0	0	1	0	1	1	1
0	0	1	1	0	0	0	0	0	1	1	0	0	1
0	0	1	1	0	0	0	0	0	1	1	0	1	1
0	0	1	1	0	0	0	0	0	1	1	1	0	1
0	0	1	1	0	0	0	0	0	1	1	1	1	1
0	0	1	1	0	0	0	0	1	0	0	0	0	1
0	0	1	1	0	0	0	0	1	0	0	0	1	1
0	0	1	1	0	0	0	0	1	0	0	1	0	1
0	0	1	1	0	0	0	0	1	0	0	1	1	1
0	0	1	1	0	0	0	0	1	0	1	0	0	1
0	0	1	1	0	0	0	0	1	0	1	0	1	1
0	0	1	1	0	0	0	0	1	0	1	1	0	1
0	0	1	1	0	0	0	0	1	0	1	1	1	1
0	0	1	1	0	0	0	0	1	1	0	0	0	1
0	0	1	1	0	0	0	0	1	1	0	0	1	1
0	0	1	1	0	0	0	0	1	1	0	1	0	1
0	0	1	1	0	0	0	0	1	1	0	1	1	1
0	0	1	1	0	0	0	0	1	1	1	0	0	1
0	0	1	1	0	0	0	0	1	1	1	0	1	1
0	0	1	1	0	0	0	0	1	1	1	1	0	1
0	0	1	1	0	0	0	0	1	1	1	1	1	1
0	0	1	1	0	0	0	1	0	0	0	0	0	1
0	0	1	1	0	0	0	1	0	0	0	0	1	1
0	0	1	1	0	0	0	1	0	0	0	1	0	1
0	0	1	1	0	0	0	1	0	0	0	1	1	1
0	0	1	1	0	0	0	1	0	0	1	0	0	1
0	0	1	1	0	0	0	1	0	0	1	0	1	1
0	0	1	1	0	0	0	1	0	0	1	1	0	1
0	0	1	1	0	0	0	1	0	0	1	1	1	1
0	0	1	1	0	0	0	1	0	1	0	0	0	1

0	0	1	1	0	0	0	1	0	1	0	0	1	1
0	0	1	1	0	0	0	1	0	1	0	1	0	1
0	0	1	1	0	0	0	1	0	1	0	1	1	1
0	0	1	1	0	0	0	1	0	1	1	0	0	1
0	0	1	1	0	0	0	1	0	1	1	0	1	1
0	0	1	1	0	0	0	1	0	1	1	1	0	1
0	0	1	1	0	0	0	1	0	1	1	1	1	1
0	0	1	1	0	0	0	1	1	0	0	0	0	1
0	0	1	1	0	0	0	1	1	0	0	0	1	1
0	0	1	1	0	0	0	1	1	0	0	1	0	1
0	0	1	1	0	0	0	1	1	0	0	1	1	1
0	0	1	1	0	0	0	1	1	0	1	0	0	1
0	0	1	1	0	0	0	1	1	0	1	0	1	1
0	0	1	1	0	0	0	1	1	0	1	1	0	1
0	0	1	1	0	0	0	1	1	0	1	1	1	1
0	0	1	1	0	0	0	1	1	1	0	0	0	1
0	0	1	1	0	0	0	1	1	1	0	0	1	1
0	0	1	1	0	0	0	1	1	1	0	1	0	1
0	0	1	1	0	0	0	1	1	1	0	1	1	1
0	0	1	1	0	0	0	1	1	1	1	0	0	1
0	0	1	1	0	0	0	1	1	1	1	0	1	1
0	0	1	1	0	0	0	1	1	1	1	1	0	1
0	0	1	1	0	0	0	1	1	1	1	1	1	1
0	0	1	1	0	0	1	0	0	0	0	0	0	1
0	0	1	1	0	0	1	0	0	0	0	0	1	1
0	0	1	1	0	0	1	0	0	0	0	1	0	1
0	0	1	1	0	0	1	0	0	0	0	1	1	1
0	0	1	1	0	0	1	0	0	0	1	0	0	1
0	0	1	1	0	0	1	0	0	0	1	0	1	1
0	0	1	1	0	0	1	0	0	0	1	1	0	1
0	0	1	1	0	0	1	0	0	0	1	1	1	1
0	0	1	1	0	0	1	0	0	1	0	0	0	1
0	0	1	1	0	0	1	0	0	1	0	0	1	1
0	0	1	1	0	0	1	0	0	1	0	1	0	1
0	0	1	1	0	0	1	0	0	1	0	1	1	1
0	0	1	1	0	0	1	0	0	1	1	0	0	1
0	0	1	1	0	0	1	0	0	1	1	0	1	1
0	0	1	1	0	0	1	0	0	1	1	1	0	1
0	0	1	1	0	0	1	0	0	1	1	1	1	1
0	0	1	1	0	0	1	0	1	0	0	0	0	1
0	0	1	1	0	0	1	0	1	0	0	0	1	1
0	0	1	1	0	0	1	0	1	0	0	1	0	1
0	0	1	1	0	0	1	0	1	0	0	1	1	1
0	0	1	1	0	0	1	0	1	0	1	0	0	1
0	0	1	1	0	0	1	0	1	0	1	0	1	1
0	0	1	1	0	0	1	0	1	0	1	1	0	1

0	0	1	1	0	0	1	0	1	0	1	1	1	1
0	0	1	1	0	0	1	0	1	1	0	0	0	1
0	0	1	1	0	0	1	0	1	1	0	0	1	1
0	0	1	1	0	0	1	0	1	1	0	1	0	1
0	0	1	1	0	0	1	0	1	1	0	1	1	1
0	0	1	1	0	0	1	0	1	1	1	0	0	1
0	0	1	1	0	0	1	0	1	1	1	0	1	1
0	0	1	1	0	0	1	0	1	1	1	1	0	1
0	0	1	1	0	0	1	0	1	1	1	1	1	1
0	0	1	1	0	0	1	1	0	0	0	0	0	1
0	0	1	1	0	0	1	1	0	0	0	0	1	1
0	0	1	1	0	0	1	1	0	0	0	1	0	1
0	0	1	1	0	0	1	1	0	0	0	1	1	1
0	0	1	1	0	0	1	1	0	0	1	0	0	1
0	0	1	1	0	0	1	1	0	0	1	0	1	1
0	0	1	1	0	0	1	1	0	0	1	1	0	1
0	0	1	1	0	0	1	1	0	0	1	1	1	1
0	0	1	1	0	0	1	1	0	1	0	0	0	1
0	0	1	1	0	0	1	1	0	1	0	0	1	1
0	0	1	1	0	0	1	1	0	1	0	1	0	1
0	0	1	1	0	0	1	1	0	1	0	1	1	1
0	0	1	1	0	0	1	1	0	1	1	0	0	1
0	0	1	1	0	0	1	1	0	1	1	0	1	1
0	0	1	1	0	0	1	1	0	1	1	1	0	1
0	0	1	1	0	0	1	1	0	1	1	1	1	1
0	0	1	1	0	0	1	1	1	0	0	0	0	1
0	0	1	1	0	0	1	1	1	0	0	0	1	1
0	0	1	1	0	0	1	1	1	0	0	1	0	1
0	0	1	1	0	0	1	1	1	0	0	1	1	1
0	0	1	1	0	0	1	1	1	0	1	0	0	1
0	0	1	1	0	0	1	1	1	0	1	0	1	1
0	0	1	1	0	0	1	1	1	0	1	1	0	1
0	0	1	1	0	0	1	1	1	0	1	1	1	1
0	0	1	1	0	0	1	1	1	1	0	0	0	1
0	0	1	1	0	0	1	1	1	1	0	0	1	1
0	0	1	1	0	0	1	1	1	1	0	1	0	1
0	0	1	1	0	0	1	1	1	1	0	1	1	1
0	0	1	1	0	0	1	1	1	1	1	0	0	1
0	0	1	1	0	0	1	1	1	1	1	0	1	1
0	0	1	1	0	0	1	1	1	1	1	1	0	1
0	0	1	1	0	0	1	1	1	1	1	1	1	1
0	0	1	1	0	1	0	0	0	0	0	0	0	1
0	0	1	1	0	1	0	0	0	0	0	0	1	1
0	0	1	1	0	1	0	0	0	0	0	1	0	1
0	0	1	1	0	1	0	0	0	0	0	1	1	1
0	0	1	1	0	1	0	0	0	0	1	0	0	1

0	0	1	1	0	1	0	0	0	0	1	0	1	1
0	0	1	1	0	1	0	0	0	0	1	1	0	1
0	0	1	1	0	1	0	0	0	0	1	1	1	1
0	0	1	1	0	1	0	0	0	1	0	0	0	1
0	0	1	1	0	1	0	0	0	1	0	0	1	1
0	0	1	1	0	1	0	0	0	1	0	1	0	1
0	0	1	1	0	1	0	0	0	1	0	1	1	1
0	0	1	1	0	1	0	0	0	1	1	0	0	1
0	0	1	1	0	1	0	0	0	1	1	0	1	1
0	0	1	1	0	1	0	0	0	1	1	1	0	1
0	0	1	1	0	1	0	0	0	1	1	1	1	1
0	0	1	1	0	1	0	0	1	0	0	0	0	1
0	0	1	1	0	1	0	0	1	0	0	0	1	1
0	0	1	1	0	1	0	0	1	0	0	1	0	1
0	0	1	1	0	1	0	0	1	0	0	1	1	1
0	0	1	1	0	1	0	0	1	0	1	0	0	1
0	0	1	1	0	1	0	0	1	0	1	0	1	1
0	0	1	1	0	1	0	0	1	0	1	1	0	1
0	0	1	1	0	1	0	0	1	0	1	1	1	1
0	0	1	1	0	1	0	0	1	1	0	0	0	1
0	0	1	1	0	1	0	0	1	1	0	0	1	1
0	0	1	1	0	1	0	0	1	1	0	1	0	1
0	0	1	1	0	1	0	0	1	1	0	1	1	1
0	0	1	1	0	1	0	0	1	1	1	0	0	1
0	0	1	1	0	1	0	0	1	1	1	0	1	1
0	0	1	1	0	1	0	0	1	1	1	1	0	1
0	0	1	1	0	1	0	0	1	1	1	1	1	1
0	0	1	1	0	1	0	1	0	0	0	0	0	1
0	0	1	1	0	1	0	1	0	0	0	0	1	1
0	0	1	1	0	1	0	1	0	0	0	1	0	1
0	0	1	1	0	1	0	1	0	0	0	1	1	1
0	0	1	1	0	1	0	1	0	0	1	0	0	1
0	0	1	1	0	1	0	1	0	0	1	0	1	1
0	0	1	1	0	1	0	1	0	0	1	1	0	1
0	0	1	1	0	1	0	1	0	0	1	1	1	1
0	0	1	1	0	1	0	1	0	1	0	0	0	1
0	0	1	1	0	1	0	1	0	1	0	0	1	1
0	0	1	1	0	1	0	1	0	1	0	1	0	1
0	0	1	1	0	1	0	1	0	1	0	1	1	1
0	0	1	1	0	1	0	1	0	1	1	0	0	1
0	0	1	1	0	1	0	1	0	1	1	0	1	1
0	0	1	1	0	1	0	1	0	1	1	1	0	1
0	0	1	1	0	1	0	1	0	1	1	1	1	1
0	0	1	1	0	1	0	1	1	0	0	0	0	1
0	0	1	1	0	1	0	1	1	0	0	0	1	1
0	0	1	1	0	1	0	1	1	0	0	1	0	1

0	0	1	1	0	1	0	1	1	0	0	1	1	1
0	0	1	1	0	1	0	1	1	0	1	0	0	1
0	0	1	1	0	1	0	1	1	0	1	0	1	1
0	0	1	1	0	1	0	1	1	0	1	1	0	1
0	0	1	1	0	1	0	1	1	0	1	1	1	1
0	0	1	1	0	1	0	1	1	1	0	0	0	1
0	0	1	1	0	1	0	1	1	1	0	0	1	1
0	0	1	1	0	1	0	1	1	1	0	1	0	1
0	0	1	1	0	1	0	1	1	1	0	1	1	1
0	0	1	1	0	1	0	1	1	1	1	0	0	1
0	0	1	1	0	1	0	1	1	1	1	0	1	1
0	0	1	1	0	1	0	1	1	1	1	1	0	1
0	0	1	1	0	1	0	1	1	1	1	1	1	1
0	0	1	1	0	1	1	0	0	0	0	0	0	1
0	0	1	1	0	1	1	0	0	0	0	0	1	1
0	0	1	1	0	1	1	0	0	0	0	1	0	1
0	0	1	1	0	1	1	0	0	0	0	1	1	1
0	0	1	1	0	1	1	0	0	0	1	0	0	1
0	0	1	1	0	1	1	0	0	0	1	0	1	1
0	0	1	1	0	1	1	0	0	0	1	1	0	1
0	0	1	1	0	1	1	0	0	0	1	1	1	1
0	0	1	1	0	1	1	0	0	1	0	0	0	1
0	0	1	1	0	1	1	0	0	1	0	0	1	1
0	0	1	1	0	1	1	0	0	1	0	1	0	1
0	0	1	1	0	1	1	0	0	1	0	1	1	1
0	0	1	1	0	1	1	0	0	1	1	0	0	1
0	0	1	1	0	1	1	0	0	1	1	0	1	1
0	0	1	1	0	1	1	0	0	1	1	1	0	1
0	0	1	1	0	1	1	0	0	1	1	1	1	1
0	0	1	1	0	1	1	0	1	0	0	0	0	1
0	0	1	1	0	1	1	0	1	0	0	0	1	1
0	0	1	1	0	1	1	0	1	0	0	1	0	1
0	0	1	1	0	1	1	0	1	0	0	1	1	1
0	0	1	1	0	1	1	0	1	0	1	0	0	1
0	0	1	1	0	1	1	0	1	0	1	0	1	1
0	0	1	1	0	1	1	0	1	0	1	1	0	1
0	0	1	1	0	1	1	0	1	0	1	1	1	1
0	0	1	1	0	1	1	0	1	1	0	0	0	1
0	0	1	1	0	1	1	0	1	1	0	0	1	1
0	0	1	1	0	1	1	0	1	1	0	1	0	1
0	0	1	1	0	1	1	0	1	1	0	1	1	1
0	0	1	1	0	1	1	0	1	1	1	0	0	1
0	0	1	1	0	1	1	0	1	1	1	0	1	1
0	0	1	1	0	1	1	0	1	1	1	1	0	1
0	0	1	1	0	1	1	0	1	1	1	1	1	1
0	0	1	1	0	1	1	1	0	0	1	0	0	1

0	0	1	1	0	1	1	1	0	0	0	0	1	1
0	0	1	1	0	1	1	1	0	0	0	1	0	1
0	0	1	1	0	1	1	1	0	0	0	1	1	1
0	0	1	1	0	1	1	1	0	0	0	0	0	1
0	0	1	1	0	1	1	1	0	0	1	0	1	1
0	0	1	1	0	1	1	1	0	0	1	1	0	1
0	0	1	1	0	1	1	1	0	0	1	1	1	1
0	0	1	1	0	1	1	1	0	1	1	0	0	1
0	0	1	1	0	1	1	1	0	1	0	0	1	1
0	0	1	1	0	1	1	1	0	1	0	1	0	1
0	0	1	1	0	1	1	1	0	1	0	1	1	1
0	0	1	1	0	1	1	1	0	1	0	0	0	1
0	0	1	1	0	1	1	1	0	1	1	0	1	1
0	0	1	1	0	1	1	1	0	1	1	1	0	1
0	0	1	1	0	1	1	1	0	1	1	1	1	1
0	0	1	1	0	1	1	1	1	0	1	0	0	1
0	0	1	1	0	1	1	1	1	0	0	0	1	1
0	0	1	1	0	1	1	1	1	0	0	1	0	1
0	0	1	1	0	1	1	1	1	0	0	1	1	1
0	0	1	1	0	1	1	1	1	0	0	0	0	1
0	0	1	1	0	1	1	1	1	0	1	0	1	1
0	0	1	1	0	1	1	1	1	0	1	1	0	1
0	0	1	1	0	1	1	1	1	0	1	1	1	1
0	0	1	1	0	1	1	1	1	1	1	0	0	1
0	0	1	1	0	1	1	1	1	1	0	0	1	1
0	0	1	1	0	1	1	1	1	1	0	1	0	1
0	0	1	1	0	1	1	1	1	1	0	1	1	1
0	0	1	1	0	1	1	1	1	1	0	0	0	1
0	0	1	1	0	1	1	1	1	1	1	0	1	1
0	0	1	1	0	1	1	1	1	1	1	1	0	1
0	0	1	1	0	1	1	1	1	1	1	1	1	1
0	0	1	1	1	0	0	0	0	0	0	0	0	1
0	0	1	1	1	0	0	0	0	0	0	0	1	1
0	0	1	1	1	0	0	0	0	0	0	1	0	1
0	0	1	1	1	0	0	0	0	0	0	1	1	1
0	0	1	1	1	0	0	0	0	0	1	0	0	1
0	0	1	1	1	0	0	0	0	0	1	0	1	1
0	0	1	1	1	0	0	0	0	0	1	1	0	1
0	0	1	1	1	0	0	0	0	0	1	1	1	1
0	0	1	1	1	0	0	0	0	1	0	0	0	1
0	0	1	1	1	0	0	0	0	1	0	0	1	1
0	0	1	1	1	0	0	0	0	1	0	1	0	1
0	0	1	1	1	0	0	0	0	1	0	1	1	1
0	0	1	1	1	0	0	0	0	1	1	0	0	1
0	0	1	1	1	0	0	0	0	1	1	0	1	1
0	0	1	1	1	0	0	0	0	1	1	1	0	1

0	0	1	1	1	0	0	0	0	1	1	1	1	1
0	0	1	1	1	0	0	0	1	0	0	0	0	1
0	0	1	1	1	0	0	0	1	0	0	0	1	1
0	0	1	1	1	0	0	0	1	0	0	1	0	1
0	0	1	1	1	0	0	0	1	0	0	1	1	1
0	0	1	1	1	0	0	0	1	0	1	0	0	1
0	0	1	1	1	0	0	0	1	0	1	0	1	1
0	0	1	1	1	0	0	0	1	0	1	1	0	1
0	0	1	1	1	0	0	0	1	0	1	1	1	1
0	0	1	1	1	0	0	0	1	1	0	0	0	1
0	0	1	1	1	0	0	0	1	1	0	0	1	1
0	0	1	1	1	0	0	0	1	1	0	1	0	1
0	0	1	1	1	0	0	0	1	1	0	1	1	1
0	0	1	1	1	0	0	0	1	1	1	0	0	1
0	0	1	1	1	0	0	0	1	1	1	0	1	1
0	0	1	1	1	0	0	0	1	1	1	1	0	1
0	0	1	1	1	0	0	0	1	1	1	1	1	1
0	0	1	1	1	0	0	1	0	0	0	0	0	1
0	0	1	1	1	0	0	1	0	0	0	0	1	1
0	0	1	1	1	0	0	1	0	0	0	1	0	1
0	0	1	1	1	0	0	1	0	0	0	1	1	1
0	0	1	1	1	0	0	1	0	0	1	0	0	1
0	0	1	1	1	0	0	1	0	0	1	0	1	1
0	0	1	1	1	0	0	1	0	0	1	1	0	1
0	0	1	1	1	0	0	1	0	0	1	1	1	1
0	0	1	1	1	0	0	1	0	1	0	0	0	1
0	0	1	1	1	0	0	1	0	1	0	0	1	1
0	0	1	1	1	0	0	1	0	1	0	1	0	1
0	0	1	1	1	0	0	1	0	1	0	1	1	1
0	0	1	1	1	0	0	1	0	1	1	0	0	1
0	0	1	1	1	0	0	1	0	1	1	0	1	1
0	0	1	1	1	0	0	1	0	1	1	1	0	1
0	0	1	1	1	0	0	1	0	1	1	1	1	1
0	0	1	1	1	0	0	1	1	0	0	0	0	1
0	0	1	1	1	0	0	1	1	0	0	0	1	1
0	0	1	1	1	0	0	1	1	0	0	1	0	1
0	0	1	1	1	0	0	1	1	0	0	1	1	1
0	0	1	1	1	0	0	1	1	0	1	0	0	1
0	0	1	1	1	0	0	1	1	0	1	0	1	1
0	0	1	1	1	0	0	1	1	0	1	1	0	1
0	0	1	1	1	0	0	1	1	0	1	1	1	1
0	0	1	1	1	0	0	1	1	1	0	0	0	1
0	0	1	1	1	0	0	1	1	1	0	0	1	1
0	0	1	1	1	0	0	1	1	1	0	1	0	1
0	0	1	1	1	0	0	1	1	1	0	1	1	1
0	0	1	1	1	0	0	1	1	1	1	0	0	1

0	0	1	1	1	0	0	1	1	1	1	0	1	1
0	0	1	1	1	0	0	1	1	1	1	1	0	1
0	0	1	1	1	0	0	1	1	1	1	1	1	1
0	0	1	1	1	0	1	0	0	0	0	0	0	1
0	0	1	1	1	0	1	0	0	0	0	0	1	1
0	0	1	1	1	0	1	0	0	0	0	1	0	1
0	0	1	1	1	0	1	0	0	0	0	1	1	1
0	0	1	1	1	0	1	0	0	0	1	0	0	1
0	0	1	1	1	0	1	0	0	0	1	0	1	1
0	0	1	1	1	0	1	0	0	0	1	1	0	1
0	0	1	1	1	0	1	0	0	0	1	1	1	1
0	0	1	1	1	0	1	0	0	1	0	0	0	1
0	0	1	1	1	0	1	0	0	1	0	0	1	1
0	0	1	1	1	0	1	0	0	1	0	1	0	1
0	0	1	1	1	0	1	0	0	1	0	1	1	1
0	0	1	1	1	0	1	0	0	1	1	0	0	1
0	0	1	1	1	0	1	0	0	1	1	0	1	1
0	0	1	1	1	0	1	0	0	1	1	1	0	1
0	0	1	1	1	0	1	0	0	1	1	1	1	1
0	0	1	1	1	0	1	0	1	0	0	0	0	1
0	0	1	1	1	0	1	0	1	0	0	0	1	1
0	0	1	1	1	0	1	0	1	0	0	1	0	1
0	0	1	1	1	0	1	0	1	0	0	1	1	1
0	0	1	1	1	0	1	0	1	0	1	0	0	1
0	0	1	1	1	0	1	0	1	0	1	0	1	1
0	0	1	1	1	0	1	0	1	0	1	1	0	1
0	0	1	1	1	0	1	0	1	0	1	1	1	1
0	0	1	1	1	0	1	0	1	1	0	0	0	1
0	0	1	1	1	0	1	0	1	1	0	0	1	1
0	0	1	1	1	0	1	0	1	1	0	1	0	1
0	0	1	1	1	0	1	0	1	1	0	1	1	1
0	0	1	1	1	0	1	0	1	1	1	0	0	1
0	0	1	1	1	0	1	0	1	1	1	0	1	1
0	0	1	1	1	0	1	0	1	1	1	1	0	1
0	0	1	1	1	0	1	0	1	1	1	1	1	1
0	0	1	1	1	0	1	1	0	0	0	0	0	1
0	0	1	1	1	0	1	1	0	0	0	0	1	1
0	0	1	1	1	0	1	1	0	0	0	1	0	1
0	0	1	1	1	0	1	1	0	0	0	1	1	1
0	0	1	1	1	0	1	1	0	0	1	0	0	1
0	0	1	1	1	0	1	1	0	0	1	0	1	1
0	0	1	1	1	0	1	1	0	0	1	1	0	1
0	0	1	1	1	0	1	1	0	0	1	1	1	1
0	0	1	1	1	0	1	1	0	1	0	0	0	1
0	0	1	1	1	0	1	1	0	1	0	0	1	1
0	0	1	1	1	0	1	1	0	1	0	1	0	1

0	0	1	1	1	0	1	1	0	1	0	1	1	1
0	0	1	1	1	0	1	1	0	1	1	0	0	1
0	0	1	1	1	0	1	1	0	1	1	0	1	1
0	0	1	1	1	0	1	1	0	1	1	1	0	1
0	0	1	1	1	0	1	1	0	1	1	1	1	1
0	0	1	1	1	0	1	1	1	0	0	0	0	1
0	0	1	1	1	0	1	1	1	0	0	0	1	1
0	0	1	1	1	0	1	1	1	0	0	1	0	1
0	0	1	1	1	0	1	1	1	0	0	1	1	1
0	0	1	1	1	0	1	1	1	0	1	0	0	1
0	0	1	1	1	0	1	1	1	0	1	0	1	1
0	0	1	1	1	0	1	1	1	0	1	1	0	1
0	0	1	1	1	0	1	1	1	0	1	1	1	1
0	0	1	1	1	0	1	1	1	1	0	0	0	1
0	0	1	1	1	0	1	1	1	1	0	0	1	1
0	0	1	1	1	0	1	1	1	1	0	1	0	1
0	0	1	1	1	0	1	1	1	1	0	1	1	1
0	0	1	1	1	0	1	1	1	1	1	0	0	1
0	0	1	1	1	0	1	1	1	1	1	0	1	1
0	0	1	1	1	0	1	1	1	1	1	1	0	1
0	0	1	1	1	0	1	1	1	1	1	1	1	1
0	0	1	1	1	1	0	0	0	0	0	0	0	1
0	0	1	1	1	1	0	0	0	0	0	0	1	1
0	0	1	1	1	1	0	0	0	0	0	1	0	1
0	0	1	1	1	1	0	0	0	0	0	1	1	1
0	0	1	1	1	1	0	0	0	0	1	0	0	1
0	0	1	1	1	1	0	0	0	0	1	0	1	1
0	0	1	1	1	1	0	0	0	0	1	1	0	1
0	0	1	1	1	1	0	0	0	0	1	1	1	1
0	0	1	1	1	1	0	0	0	1	0	0	0	1
0	0	1	1	1	1	0	0	0	1	0	0	1	1
0	0	1	1	1	1	0	0	0	1	0	1	0	1
0	0	1	1	1	1	0	0	0	1	0	1	1	1
0	0	1	1	1	1	0	0	0	1	1	0	0	1
0	0	1	1	1	1	0	0	0	1	1	0	1	1
0	0	1	1	1	1	0	0	0	1	1	1	0	1
0	0	1	1	1	1	0	0	0	1	1	1	1	1
0	0	1	1	1	1	0	0	1	0	0	0	0	1
0	0	1	1	1	1	0	0	1	0	0	0	1	1
0	0	1	1	1	1	0	0	1	0	0	1	0	1
0	0	1	1	1	1	0	0	1	0	0	1	1	1
0	0	1	1	1	1	0	0	1	0	1	0	0	1
0	0	1	1	1	1	0	0	1	0	1	0	1	1
0	0	1	1	1	1	0	0	1	0	1	1	0	1
0	0	1	1	1	1	0	0	1	0	1	1	1	1
0	0	1	1	1	1	0	0	1	1	0	0	0	1

0	0	1	1	1	1	0	0	1	1	0	0	1	1
0	0	1	1	1	1	0	0	1	1	0	1	0	1
0	0	1	1	1	1	0	0	1	1	0	1	1	1
0	0	1	1	1	1	0	0	1	1	1	0	0	1
0	0	1	1	1	1	0	0	1	1	1	0	1	1
0	0	1	1	1	1	0	0	1	1	1	1	0	1
0	0	1	1	1	1	0	0	1	1	1	1	1	1
0	0	1	1	1	1	0	1	0	0	0	0	0	1
0	0	1	1	1	1	0	1	0	0	0	0	1	1
0	0	1	1	1	1	0	1	0	0	0	1	0	1
0	0	1	1	1	1	0	1	0	0	0	1	1	1
0	0	1	1	1	1	0	1	0	0	1	0	0	1
0	0	1	1	1	1	0	1	0	0	1	0	1	1
0	0	1	1	1	1	0	1	0	0	1	1	0	1
0	0	1	1	1	1	0	1	0	0	1	1	1	1
0	0	1	1	1	1	0	1	0	1	0	0	0	1
0	0	1	1	1	1	0	1	0	1	0	0	1	1
0	0	1	1	1	1	0	1	0	1	0	1	0	1
0	0	1	1	1	1	0	1	0	1	0	1	1	1
0	0	1	1	1	1	0	1	0	1	1	0	0	1
0	0	1	1	1	1	0	1	0	1	1	0	1	1
0	0	1	1	1	1	0	1	0	1	1	1	0	1
0	0	1	1	1	1	0	1	0	1	1	1	1	1
0	0	1	1	1	1	0	1	1	0	0	0	0	1
0	0	1	1	1	1	0	1	1	0	0	0	1	1
0	0	1	1	1	1	0	1	1	0	0	1	0	1
0	0	1	1	1	1	0	1	1	0	0	1	1	1
0	0	1	1	1	1	0	1	1	0	1	0	0	1
0	0	1	1	1	1	0	1	1	0	1	0	1	1
0	0	1	1	1	1	0	1	1	0	1	1	0	1
0	0	1	1	1	1	0	1	1	0	1	1	1	1
0	0	1	1	1	1	0	1	1	1	0	0	0	1
0	0	1	1	1	1	0	1	1	1	0	0	1	1
0	0	1	1	1	1	0	1	1	1	0	1	0	1
0	0	1	1	1	1	0	1	1	1	0	1	1	1
0	0	1	1	1	1	0	1	1	1	1	0	0	1
0	0	1	1	1	1	0	1	1	1	1	0	1	1
0	0	1	1	1	1	0	1	1	1	1	1	0	1
0	0	1	1	1	1	0	1	1	1	1	1	1	1
0	0	1	1	1	1	1	0	0	0	0	0	0	1
0	0	1	1	1	1	1	0	0	0	0	0	1	1
0	0	1	1	1	1	1	0	0	0	0	1	0	1
0	0	1	1	1	1	1	0	0	0	0	1	1	1
0	0	1	1	1	1	1	0	0	0	1	0	0	1
0	0	1	1	1	1	1	0	0	0	1	0	1	1
0	0	1	1	1	1	1	0	0	0	1	1	0	1

0	0	1	1	1	1	1	0	0	0	1	1	1	1
0	0	1	1	1	1	1	0	0	1	0	0	0	1
0	0	1	1	1	1	1	0	0	1	0	0	1	1
0	0	1	1	1	1	1	0	0	1	0	1	0	1
0	0	1	1	1	1	1	0	0	1	0	1	1	1
0	0	1	1	1	1	1	0	0	1	1	0	0	1
0	0	1	1	1	1	1	0	0	1	1	0	1	1
0	0	1	1	1	1	1	0	0	1	1	1	0	1
0	0	1	1	1	1	1	0	0	1	1	1	1	1
0	0	1	1	1	1	1	0	1	0	0	0	0	1
0	0	1	1	1	1	1	0	1	0	0	0	1	1
0	0	1	1	1	1	1	0	1	0	0	1	0	1
0	0	1	1	1	1	1	0	1	0	0	1	1	1
0	0	1	1	1	1	1	0	1	0	1	0	0	1
0	0	1	1	1	1	1	0	1	0	1	0	1	1
0	0	1	1	1	1	1	0	1	0	1	1	0	1
0	0	1	1	1	1	1	0	1	0	1	1	1	1
0	0	1	1	1	1	1	0	1	1	0	0	0	1
0	0	1	1	1	1	1	0	1	1	0	0	1	1
0	0	1	1	1	1	1	0	1	1	0	1	0	1
0	0	1	1	1	1	1	0	1	1	0	1	1	1
0	0	1	1	1	1	1	0	1	1	1	0	0	1
0	0	1	1	1	1	1	0	1	1	1	0	1	1
0	0	1	1	1	1	1	0	1	1	1	1	0	1
0	0	1	1	1	1	1	0	1	1	1	1	1	1
0	0	1	1	1	1	1	1	0	0	1	0	0	1
0	0	1	1	1	1	1	1	0	0	0	0	1	1
0	0	1	1	1	1	1	1	0	0	0	1	0	1
0	0	1	1	1	1	1	1	0	0	0	1	1	1
0	0	1	1	1	1	1	1	0	0	0	0	0	1
0	0	1	1	1	1	1	1	0	0	1	0	1	1
0	0	1	1	1	1	1	1	0	0	1	1	0	1
0	0	1	1	1	1	1	1	0	0	1	1	1	1
0	0	1	1	1	1	1	1	0	1	1	0	0	1
0	0	1	1	1	1	1	1	0	1	0	0	1	1
0	0	1	1	1	1	1	1	0	1	0	1	0	1
0	0	1	1	1	1	1	1	0	1	0	1	1	1
0	0	1	1	1	1	1	1	0	1	0	0	0	1
0	0	1	1	1	1	1	1	0	1	1	0	1	1
0	0	1	1	1	1	1	1	0	1	1	1	0	1
0	0	1	1	1	1	1	1	0	1	1	1	1	1
0	0	1	1	1	1	1	1	1	0	1	0	0	1
0	0	1	1	1	1	1	1	1	0	0	0	1	1
0	0	1	1	1	1	1	1	1	0	0	1	0	1
0	0	1	1	1	1	1	1	1	0	0	1	1	1
0	0	1	1	1	1	1	1	1	0	0	0	0	1

0	0	1	1	1	1	1	1	1	0	1	0	1	1
0	0	1	1	1	1	1	1	1	0	1	1	0	1
0	0	1	1	1	1	1	1	1	0	1	1	1	1
0	0	1	1	1	1	1	1	1	1	1	0	0	1
0	0	1	1	1	1	1	1	1	1	0	0	1	1
0	0	1	1	1	1	1	1	1	1	0	1	0	1
0	0	1	1	1	1	1	1	1	1	0	1	1	1
0	0	1	1	1	1	1	1	1	1	0	0	0	1
0	0	1	1	1	1	1	1	1	1	1	0	1	1
0	0	1	1	1	1	1	1	1	1	1	1	0	1
0	0	1	1	1	1	1	1	1	1	1	1	1	1
0	1	0	0	0	0	0	0	0	0	0	0	0	1
0	1	0	0	0	0	0	0	0	0	0	0	1	1
0	1	0	0	0	0	0	0	0	0	0	1	0	1
0	1	0	0	0	0	0	0	0	0	0	1	1	1
0	1	0	0	0	0	0	0	0	0	1	0	0	1
0	1	0	0	0	0	0	0	0	0	1	0	1	1
0	1	0	0	0	0	0	0	0	0	1	1	0	1
0	1	0	0	0	0	0	0	0	0	1	1	1	1
0	1	0	0	0	0	0	0	0	1	0	0	0	1
0	1	0	0	0	0	0	0	0	1	0	0	1	1
0	1	0	0	0	0	0	0	0	1	0	1	0	1
0	1	0	0	0	0	0	0	0	1	0	1	1	1
0	1	0	0	0	0	0	0	0	1	1	0	0	1
0	1	0	0	0	0	0	0	0	1	1	0	1	1
0	1	0	0	0	0	0	0	0	1	1	1	0	1
0	1	0	0	0	0	0	0	0	1	1	1	1	1
0	1	0	0	0	0	0	0	1	0	0	0	0	1
0	1	0	0	0	0	0	0	1	0	0	0	1	1
0	1	0	0	0	0	0	0	1	0	0	1	0	1
0	1	0	0	0	0	0	0	1	0	0	1	1	1
0	1	0	0	0	0	0	0	1	0	1	0	0	1
0	1	0	0	0	0	0	0	1	0	1	0	1	1
0	1	0	0	0	0	0	0	1	0	1	1	0	1
0	1	0	0	0	0	0	0	1	0	1	1	1	1
0	1	0	0	0	0	0	0	1	1	0	0	0	1
0	1	0	0	0	0	0	0	1	1	0	0	1	1
0	1	0	0	0	0	0	0	1	1	0	1	0	1
0	1	0	0	0	0	0	0	1	1	0	1	1	1
0	1	0	0	0	0	0	0	1	1	1	0	0	1
0	1	0	0	0	0	0	0	1	1	1	0	1	1
0	1	0	0	0	0	0	0	1	1	1	1	0	1
0	1	0	0	0	0	0	0	1	1	1	1	1	1
0	1	0	0	0	0	0	1	0	0	0	0	0	1
0	1	0	0	0	0	0	1	0	0	0	0	1	1
0	1	0	0	0	0	0	1	0	0	0	1	0	1

0	1	0	0	0	0	0	1	0	0	0	1	1	1
0	1	0	0	0	0	0	1	0	0	1	0	0	1
0	1	0	0	0	0	0	1	0	0	1	0	1	1
0	1	0	0	0	0	0	1	0	0	1	1	0	1
0	1	0	0	0	0	0	1	0	0	1	1	1	1
0	1	0	0	0	0	0	1	0	1	0	0	0	1
0	1	0	0	0	0	0	1	0	1	0	0	1	1
0	1	0	0	0	0	0	1	0	1	0	1	0	1
0	1	0	0	0	0	0	1	0	1	0	1	1	1
0	1	0	0	0	0	0	1	0	1	1	0	0	1
0	1	0	0	0	0	0	1	0	1	1	0	1	1
0	1	0	0	0	0	0	1	0	1	1	1	0	1
0	1	0	0	0	0	0	1	0	1	1	1	1	1
0	1	0	0	0	0	0	1	1	0	0	0	0	1
0	1	0	0	0	0	0	1	1	0	0	0	1	1
0	1	0	0	0	0	0	1	1	0	0	1	0	1
0	1	0	0	0	0	0	1	1	0	0	1	1	1
0	1	0	0	0	0	0	1	1	0	1	0	0	1
0	1	0	0	0	0	0	1	1	0	1	0	1	1
0	1	0	0	0	0	0	1	1	0	1	1	0	1
0	1	0	0	0	0	0	1	1	0	1	1	1	1
0	1	0	0	0	0	0	1	1	1	0	0	0	1
0	1	0	0	0	0	0	1	1	1	0	0	1	1
0	1	0	0	0	0	0	1	1	1	0	1	0	1
0	1	0	0	0	0	0	1	1	1	0	1	1	1
0	1	0	0	0	0	0	1	1	1	1	0	0	1
0	1	0	0	0	0	0	1	1	1	1	0	1	1
0	1	0	0	0	0	0	1	1	1	1	1	0	1
0	1	0	0	0	0	0	1	1	1	1	1	1	1
0	1	0	0	0	0	1	0	0	0	0	0	0	1
0	1	0	0	0	0	1	0	0	0	0	0	1	1
0	1	0	0	0	0	1	0	0	0	0	1	0	1
0	1	0	0	0	0	1	0	0	0	0	1	1	1
0	1	0	0	0	0	1	0	0	0	1	0	0	1
0	1	0	0	0	0	1	0	0	0	1	0	1	1
0	1	0	0	0	0	1	0	0	0	1	1	0	1
0	1	0	0	0	0	1	0	0	0	1	1	1	1
0	1	0	0	0	0	1	0	0	1	0	0	0	1
0	1	0	0	0	0	1	0	0	1	0	0	1	1
0	1	0	0	0	0	1	0	0	1	0	1	0	1
0	1	0	0	0	0	1	0	0	1	0	1	1	1
0	1	0	0	0	0	1	0	0	1	1	0	0	1
0	1	0	0	0	0	1	0	0	1	1	0	1	1
0	1	0	0	0	0	1	0	0	1	1	1	0	1
0	1	0	0	0	0	1	0	0	1	1	1	1	1
0	1	0	0	0	0	1	0	1	0	0	0	0	1

0	1	0	0	0	0	1	0	1	0	0	0	1	1
0	1	0	0	0	0	1	0	1	0	0	1	0	1
0	1	0	0	0	0	1	0	1	0	0	1	1	1
0	1	0	0	0	0	1	0	1	0	1	0	0	1
0	1	0	0	0	0	1	0	1	0	1	0	1	1
0	1	0	0	0	0	1	0	1	0	1	1	0	1
0	1	0	0	0	0	1	0	1	0	1	1	1	1
0	1	0	0	0	0	1	0	1	1	0	0	0	1
0	1	0	0	0	0	1	0	1	1	0	0	1	1
0	1	0	0	0	0	1	0	1	1	0	1	0	1
0	1	0	0	0	0	1	0	1	1	0	1	1	1
0	1	0	0	0	0	1	0	1	1	1	0	0	1
0	1	0	0	0	0	1	0	1	1	1	0	1	1
0	1	0	0	0	0	1	0	1	1	1	1	0	1
0	1	0	0	0	0	1	0	1	1	1	1	1	1
0	1	0	0	0	0	1	1	0	0	0	0	0	1
0	1	0	0	0	0	1	1	0	0	0	0	1	1
0	1	0	0	0	0	1	1	0	0	0	1	0	1
0	1	0	0	0	0	1	1	0	0	0	1	1	1
0	1	0	0	0	0	1	1	0	0	1	0	0	1
0	1	0	0	0	0	1	1	0	0	1	0	1	1
0	1	0	0	0	0	1	1	0	0	1	1	0	1
0	1	0	0	0	0	1	1	0	0	1	1	1	1
0	1	0	0	0	0	1	1	0	1	0	0	0	1
0	1	0	0	0	0	1	1	0	1	0	0	1	1
0	1	0	0	0	0	1	1	0	1	0	1	0	1
0	1	0	0	0	0	1	1	0	1	0	1	1	1
0	1	0	0	0	0	1	1	0	1	1	0	0	1
0	1	0	0	0	0	1	1	0	1	1	0	1	1
0	1	0	0	0	0	1	1	0	1	1	1	0	1
0	1	0	0	0	0	1	1	0	1	1	1	1	1
0	1	0	0	0	0	1	1	1	0	0	0	0	1
0	1	0	0	0	0	1	1	1	0	0	0	1	1
0	1	0	0	0	0	1	1	1	0	0	1	0	1
0	1	0	0	0	0	1	1	1	0	0	1	1	1
0	1	0	0	0	0	1	1	1	0	1	0	0	1
0	1	0	0	0	0	1	1	1	0	1	0	1	1
0	1	0	0	0	0	1	1	1	0	1	1	0	1
0	1	0	0	0	0	1	1	1	0	1	1	1	1
0	1	0	0	0	0	1	1	1	1	0	0	0	1
0	1	0	0	0	0	1	1	1	1	0	0	1	1
0	1	0	0	0	0	1	1	1	1	0	1	0	1
0	1	0	0	0	0	1	1	1	1	0	1	1	1
0	1	0	0	0	0	1	1	1	1	1	0	0	1
0	1	0	0	0	0	1	1	1	1	1	0	1	1
0	1	0	0	0	0	1	1	1	1	1	1	0	1

0	1	0	0	0	0	1	1	1	1	1	1	1	1
0	1	0	0	0	1	0	0	0	0	0	0	0	1
0	1	0	0	0	1	0	0	0	0	0	0	1	1
0	1	0	0	0	1	0	0	0	0	0	1	0	1
0	1	0	0	0	1	0	0	0	0	0	1	1	1
0	1	0	0	0	1	0	0	0	0	1	0	0	1
0	1	0	0	0	1	0	0	0	0	1	0	1	1
0	1	0	0	0	1	0	0	0	0	1	1	0	1
0	1	0	0	0	1	0	0	0	0	1	1	1	1
0	1	0	0	0	1	0	0	0	1	0	0	0	1
0	1	0	0	0	1	0	0	0	1	0	0	1	1
0	1	0	0	0	1	0	0	0	1	0	1	0	1
0	1	0	0	0	1	0	0	0	1	0	1	1	1
0	1	0	0	0	1	0	0	0	1	1	0	0	1
0	1	0	0	0	1	0	0	0	1	1	0	1	1
0	1	0	0	0	1	0	0	0	1	1	1	0	1
0	1	0	0	0	1	0	0	0	1	1	1	1	1
0	1	0	0	0	1	0	0	1	0	0	0	0	1
0	1	0	0	0	1	0	0	1	0	0	0	1	1
0	1	0	0	0	1	0	0	1	0	0	1	0	1
0	1	0	0	0	1	0	0	1	0	0	1	1	1
0	1	0	0	0	1	0	0	1	0	1	0	0	1
0	1	0	0	0	1	0	0	1	0	1	0	1	1
0	1	0	0	0	1	0	0	1	0	1	1	0	1
0	1	0	0	0	1	0	0	1	0	1	1	1	1
0	1	0	0	0	1	0	0	1	1	0	0	0	1
0	1	0	0	0	1	0	0	1	1	0	0	1	1
0	1	0	0	0	1	0	0	1	1	0	1	0	1
0	1	0	0	0	1	0	0	1	1	0	1	1	1
0	1	0	0	0	1	0	0	1	1	1	0	0	1
0	1	0	0	0	1	0	0	1	1	1	0	1	1
0	1	0	0	0	1	0	0	1	1	1	1	0	1
0	1	0	0	0	1	0	0	1	1	1	1	1	1
0	1	0	0	0	1	0	1	0	0	0	0	0	1
0	1	0	0	0	1	0	1	0	0	0	0	1	1
0	1	0	0	0	1	0	1	0	0	0	1	0	1
0	1	0	0	0	1	0	1	0	0	0	1	1	1
0	1	0	0	0	1	0	1	0	0	1	0	0	1
0	1	0	0	0	1	0	1	0	0	1	0	1	1
0	1	0	0	0	1	0	1	0	0	1	1	0	1
0	1	0	0	0	1	0	1	0	0	1	1	1	1
0	1	0	0	0	1	0	1	0	1	0	0	0	1
0	1	0	0	0	1	0	1	0	1	0	0	1	1
0	1	0	0	0	1	0	1	0	1	0	1	0	1
0	1	0	0	0	1	0	1	0	1	0	1	1	1
0	1	0	0	0	1	0	1	0	1	1	0	0	1

0	1	0	0	0	1	0	1	0	1	1	0	1	1
0	1	0	0	0	1	0	1	0	1	1	1	0	1
0	1	0	0	0	1	0	1	0	1	1	1	1	1
0	1	0	0	0	1	0	1	1	0	0	0	0	1
0	1	0	0	0	1	0	1	1	0	0	0	1	1
0	1	0	0	0	1	0	1	1	0	0	1	0	1
0	1	0	0	0	1	0	1	1	0	0	1	1	1
0	1	0	0	0	1	0	1	1	0	1	0	0	1
0	1	0	0	0	1	0	1	1	0	1	0	1	1
0	1	0	0	0	1	0	1	1	0	1	1	0	1
0	1	0	0	0	1	0	1	1	0	1	1	1	1
0	1	0	0	0	1	0	1	1	1	0	0	0	1
0	1	0	0	0	1	0	1	1	1	0	0	1	1
0	1	0	0	0	1	0	1	1	1	0	1	0	1
0	1	0	0	0	1	0	1	1	1	0	1	1	1
0	1	0	0	0	1	0	1	1	1	1	0	0	1
0	1	0	0	0	1	0	1	1	1	1	0	1	1
0	1	0	0	0	1	0	1	1	1	1	1	0	1
0	1	0	0	0	1	0	1	1	1	1	1	1	1
0	1	0	0	0	1	1	0	0	0	0	0	0	1
0	1	0	0	0	1	1	0	0	0	0	0	1	1
0	1	0	0	0	1	1	0	0	0	0	1	0	1
0	1	0	0	0	1	1	0	0	0	0	1	1	1
0	1	0	0	0	1	1	0	0	0	1	0	0	1
0	1	0	0	0	1	1	0	0	0	1	0	1	1
0	1	0	0	0	1	1	0	0	0	1	1	0	1
0	1	0	0	0	1	1	0	0	0	1	1	1	1
0	1	0	0	0	1	1	0	0	1	0	0	0	1
0	1	0	0	0	1	1	0	0	1	0	0	1	1
0	1	0	0	0	1	1	0	0	1	0	1	0	1
0	1	0	0	0	1	1	0	0	1	0	1	1	1
0	1	0	0	0	1	1	0	0	1	1	0	0	1
0	1	0	0	0	1	1	0	0	1	1	0	1	1
0	1	0	0	0	1	1	0	0	1	1	1	0	1
0	1	0	0	0	1	1	0	0	1	1	1	1	1
0	1	0	0	0	1	1	0	1	0	0	0	0	1
0	1	0	0	0	1	1	0	1	0	0	0	1	1
0	1	0	0	0	1	1	0	1	0	0	1	0	1
0	1	0	0	0	1	1	0	1	0	0	1	1	1
0	1	0	0	0	1	1	0	1	0	1	0	0	1
0	1	0	0	0	1	1	0	1	0	1	0	1	1
0	1	0	0	0	1	1	0	1	0	1	1	0	1
0	1	0	0	0	1	1	0	1	0	1	1	1	1
0	1	0	0	0	1	1	0	1	1	0	0	0	1
0	1	0	0	0	1	1	0	1	1	0	0	1	1
0	1	0	0	0	1	1	0	1	1	0	1	0	1

0	1	0	0	0	1	1	0	1	1	0	1	1	1
0	1	0	0	0	1	1	0	1	1	1	0	0	1
0	1	0	0	0	1	1	0	1	1	1	0	1	1
0	1	0	0	0	1	1	0	1	1	1	1	0	1
0	1	0	0	0	1	1	0	1	1	1	1	1	1
0	1	0	0	0	1	1	1	0	0	1	0	0	1
0	1	0	0	0	1	1	1	0	0	0	0	1	1
0	1	0	0	0	1	1	1	0	0	0	1	0	1
0	1	0	0	0	1	1	1	0	0	0	1	1	1
0	1	0	0	0	1	1	1	0	0	0	0	0	1
0	1	0	0	0	1	1	1	0	0	1	0	1	1
0	1	0	0	0	1	1	1	0	0	1	1	0	1
0	1	0	0	0	1	1	1	0	0	1	1	1	1
0	1	0	0	0	1	1	1	0	1	1	0	0	1
0	1	0	0	0	1	1	1	0	1	0	0	1	1
0	1	0	0	0	1	1	1	0	1	0	1	0	1
0	1	0	0	0	1	1	1	0	1	0	1	1	1
0	1	0	0	0	1	1	1	0	1	0	0	0	1
0	1	0	0	0	1	1	1	0	1	1	0	1	1
0	1	0	0	0	1	1	1	0	1	1	1	0	1
0	1	0	0	0	1	1	1	0	1	1	1	1	1
0	1	0	0	0	1	1	1	1	0	1	0	0	1
0	1	0	0	0	1	1	1	1	0	0	0	1	1
0	1	0	0	0	1	1	1	1	0	0	1	0	1
0	1	0	0	0	1	1	1	1	0	0	1	1	1
0	1	0	0	0	1	1	1	1	0	0	0	0	1
0	1	0	0	0	1	1	1	1	0	1	0	1	1
0	1	0	0	0	1	1	1	1	0	1	1	0	1
0	1	0	0	0	1	1	1	1	0	1	1	1	1
0	1	0	0	0	1	1	1	1	1	1	0	0	1
0	1	0	0	0	1	1	1	1	1	0	0	1	1
0	1	0	0	0	1	1	1	1	1	0	1	0	1
0	1	0	0	0	1	1	1	1	1	0	1	1	1
0	1	0	0	0	1	1	1	1	1	0	0	0	1
0	1	0	0	0	1	1	1	1	1	1	0	1	1
0	1	0	0	0	1	1	1	1	1	1	1	0	1
0	1	0	0	0	1	1	1	1	1	1	1	1	1
0	1	0	0	1	0	0	0	0	0	0	0	0	1
0	1	0	0	1	0	0	0	0	0	0	0	1	1
0	1	0	0	1	0	0	0	0	0	0	1	0	1
0	1	0	0	1	0	0	0	0	0	0	1	1	1
0	1	0	0	1	0	0	0	0	0	1	0	0	1
0	1	0	0	1	0	0	0	0	0	1	0	1	1
0	1	0	0	1	0	0	0	0	0	1	1	0	1
0	1	0	0	1	0	0	0	0	0	1	1	1	1
0	1	0	0	1	0	0	0	0	1	0	0	0	1

0	1	0	0	1	0	0	0	0	1	0	0	1	1
0	1	0	0	1	0	0	0	0	1	0	1	0	1
0	1	0	0	1	0	0	0	0	1	0	1	1	1
0	1	0	0	1	0	0	0	0	1	1	0	0	1
0	1	0	0	1	0	0	0	0	1	1	0	1	1
0	1	0	0	1	0	0	0	0	1	1	1	0	1
0	1	0	0	1	0	0	0	0	1	1	1	1	1
0	1	0	0	1	0	0	0	1	0	0	0	0	1
0	1	0	0	1	0	0	0	1	0	0	0	1	1
0	1	0	0	1	0	0	0	1	0	0	1	0	1
0	1	0	0	1	0	0	0	1	0	0	1	1	1
0	1	0	0	1	0	0	0	1	0	1	0	0	1
0	1	0	0	1	0	0	0	1	0	1	0	1	1
0	1	0	0	1	0	0	0	1	0	1	1	0	1
0	1	0	0	1	0	0	0	1	0	1	1	1	1
0	1	0	0	1	0	0	0	1	1	0	0	0	1
0	1	0	0	1	0	0	0	1	1	0	0	1	1
0	1	0	0	1	0	0	0	1	1	0	1	0	1
0	1	0	0	1	0	0	0	1	1	0	1	1	1
0	1	0	0	1	0	0	0	1	1	1	0	0	1
0	1	0	0	1	0	0	0	1	1	1	0	1	1
0	1	0	0	1	0	0	0	1	1	1	1	0	1
0	1	0	0	1	0	0	0	1	1	1	1	1	1
0	1	0	0	1	0	0	1	0	0	0	0	0	1
0	1	0	0	1	0	0	1	0	0	0	0	1	1
0	1	0	0	1	0	0	1	0	0	0	1	0	1
0	1	0	0	1	0	0	1	0	0	0	1	1	1
0	1	0	0	1	0	0	1	0	0	1	0	0	1
0	1	0	0	1	0	0	1	0	0	1	0	1	1
0	1	0	0	1	0	0	1	0	0	1	1	0	1
0	1	0	0	1	0	0	1	0	0	1	1	1	1
0	1	0	0	1	0	0	1	0	1	0	0	0	1
0	1	0	0	1	0	0	1	0	1	0	0	1	1
0	1	0	0	1	0	0	1	0	1	0	1	0	1
0	1	0	0	1	0	0	1	0	1	0	1	1	1
0	1	0	0	1	0	0	1	0	1	1	0	0	1
0	1	0	0	1	0	0	1	0	1	1	0	1	1
0	1	0	0	1	0	0	1	0	1	1	1	0	1
0	1	0	0	1	0	0	1	0	1	1	1	1	1
0	1	0	0	1	0	0	1	1	0	0	0	0	1
0	1	0	0	1	0	0	1	1	0	0	0	1	1
0	1	0	0	1	0	0	1	1	0	0	1	0	1
0	1	0	0	1	0	0	1	1	0	0	1	1	1
0	1	0	0	1	0	0	1	1	0	1	0	0	1
0	1	0	0	1	0	0	1	1	0	1	0	1	1
0	1	0	0	1	0	0	1	1	0	1	1	0	1

0	1	0	0	1	0	0	1	1	0	1	1	1	1
0	1	0	0	1	0	0	1	1	1	0	0	0	1
0	1	0	0	1	0	0	1	1	1	0	0	1	1
0	1	0	0	1	0	0	1	1	1	0	1	0	1
0	1	0	0	1	0	0	1	1	1	0	1	1	1
0	1	0	0	1	0	0	1	1	1	1	0	0	1
0	1	0	0	1	0	0	1	1	1	1	0	1	1
0	1	0	0	1	0	0	1	1	1	1	1	0	1
0	1	0	0	1	0	0	1	1	1	1	1	1	1
0	1	0	0	1	0	1	0	0	0	0	0	0	1
0	1	0	0	1	0	1	0	0	0	0	0	1	1
0	1	0	0	1	0	1	0	0	0	0	1	0	1
0	1	0	0	1	0	1	0	0	0	0	1	1	1
0	1	0	0	1	0	1	0	0	0	1	0	0	1
0	1	0	0	1	0	1	0	0	0	1	0	1	1
0	1	0	0	1	0	1	0	0	0	1	1	0	1
0	1	0	0	1	0	1	0	0	0	1	1	1	1
0	1	0	0	1	0	1	0	0	1	0	0	0	1
0	1	0	0	1	0	1	0	0	1	0	0	1	1
0	1	0	0	1	0	1	0	0	1	0	1	0	1
0	1	0	0	1	0	1	0	0	1	0	1	1	1
0	1	0	0	1	0	1	0	0	1	1	0	0	1
0	1	0	0	1	0	1	0	0	1	1	0	1	1
0	1	0	0	1	0	1	0	0	1	1	1	0	1
0	1	0	0	1	0	1	0	0	1	1	1	1	1
0	1	0	0	1	0	1	0	1	0	0	0	0	1
0	1	0	0	1	0	1	0	1	0	0	0	1	1
0	1	0	0	1	0	1	0	1	0	0	1	0	1
0	1	0	0	1	0	1	0	1	0	0	1	1	1
0	1	0	0	1	0	1	0	1	0	1	0	0	1
0	1	0	0	1	0	1	0	1	0	1	0	1	1
0	1	0	0	1	0	1	0	1	0	1	1	0	1
0	1	0	0	1	0	1	0	1	0	1	1	1	1
0	1	0	0	1	0	1	0	1	1	0	0	0	1
0	1	0	0	1	0	1	0	1	1	0	0	1	1
0	1	0	0	1	0	1	0	1	1	0	1	0	1
0	1	0	0	1	0	1	0	1	1	0	1	1	1
0	1	0	0	1	0	1	0	1	1	1	0	0	1
0	1	0	0	1	0	1	0	1	1	1	0	1	1
0	1	0	0	1	0	1	0	1	1	1	1	0	1
0	1	0	0	1	0	1	0	1	1	1	1	1	1
0	1	0	0	1	0	1	1	0	0	0	0	0	1
0	1	0	0	1	0	1	1	0	0	0	0	1	1
0	1	0	0	1	0	1	1	0	0	0	1	0	1
0	1	0	0	1	0	1	1	0	0	0	1	1	1
0	1	0	0	1	0	1	1	0	0	1	0	0	1

0	1	0	0	1	0	1	1	0	0	1	0	1	1
0	1	0	0	1	0	1	1	0	0	1	1	0	1
0	1	0	0	1	0	1	1	0	0	1	1	1	1
0	1	0	0	1	0	1	1	0	1	0	0	0	1
0	1	0	0	1	0	1	1	0	1	0	0	1	1
0	1	0	0	1	0	1	1	0	1	0	1	0	1
0	1	0	0	1	0	1	1	0	1	0	1	1	1
0	1	0	0	1	0	1	1	0	1	1	0	0	1
0	1	0	0	1	0	1	1	0	1	1	0	1	1
0	1	0	0	1	0	1	1	0	1	1	1	0	1
0	1	0	0	1	0	1	1	0	1	1	1	1	1
0	1	0	0	1	0	1	1	1	0	0	0	0	1
0	1	0	0	1	0	1	1	1	0	0	0	1	1
0	1	0	0	1	0	1	1	1	0	0	1	0	1
0	1	0	0	1	0	1	1	1	0	0	1	1	1
0	1	0	0	1	0	1	1	1	0	1	0	0	1
0	1	0	0	1	0	1	1	1	0	1	0	1	1
0	1	0	0	1	0	1	1	1	0	1	1	0	1
0	1	0	0	1	0	1	1	1	0	1	1	1	1
0	1	0	0	1	0	1	1	1	1	0	0	0	1
0	1	0	0	1	0	1	1	1	1	0	0	1	1
0	1	0	0	1	0	1	1	1	1	0	1	0	1
0	1	0	0	1	0	1	1	1	1	0	1	1	1
0	1	0	0	1	0	1	1	1	1	1	0	0	1
0	1	0	0	1	0	1	1	1	1	1	0	1	1
0	1	0	0	1	0	1	1	1	1	1	1	0	1
0	1	0	0	1	0	1	1	1	1	1	1	1	1
0	1	0	0	1	1	0	0	0	0	0	0	0	1
0	1	0	0	1	1	0	0	0	0	0	0	1	1
0	1	0	0	1	1	0	0	0	0	0	1	0	1
0	1	0	0	1	1	0	0	0	0	0	1	1	1
0	1	0	0	1	1	0	0	0	0	1	0	0	1
0	1	0	0	1	1	0	0	0	0	1	0	1	1
0	1	0	0	1	1	0	0	0	0	1	1	0	1
0	1	0	0	1	1	0	0	0	0	1	1	1	1
0	1	0	0	1	1	0	0	0	1	0	0	0	1
0	1	0	0	1	1	0	0	0	1	0	0	1	1
0	1	0	0	1	1	0	0	0	1	0	1	0	1
0	1	0	0	1	1	0	0	0	1	0	1	1	1
0	1	0	0	1	1	0	0	0	1	1	0	0	1
0	1	0	0	1	1	0	0	0	1	1	0	1	1
0	1	0	0	1	1	0	0	0	1	1	1	0	1
0	1	0	0	1	1	0	0	0	1	1	1	1	1
0	1	0	0	1	1	0	0	1	0	0	0	0	1
0	1	0	0	1	1	0	0	1	0	0	0	1	1
0	1	0	0	1	1	0	0	1	0	0	1	0	1

0	1	0	0	1	1	0	0	1	0	0	1	1	1
0	1	0	0	1	1	0	0	1	0	1	0	0	1
0	1	0	0	1	1	0	0	1	0	1	0	1	1
0	1	0	0	1	1	0	0	1	0	1	1	0	1
0	1	0	0	1	1	0	0	1	0	1	1	1	1
0	1	0	0	1	1	0	0	1	1	0	0	0	1
0	1	0	0	1	1	0	0	1	1	0	0	1	1
0	1	0	0	1	1	0	0	1	1	0	1	0	1
0	1	0	0	1	1	0	0	1	1	0	1	1	1
0	1	0	0	1	1	0	0	1	1	1	0	0	1
0	1	0	0	1	1	0	0	1	1	1	0	1	1
0	1	0	0	1	1	0	0	1	1	1	1	0	1
0	1	0	0	1	1	0	0	1	1	1	1	1	1
0	1	0	0	1	1	0	1	0	0	0	0	0	1
0	1	0	0	1	1	0	1	0	0	0	0	1	1
0	1	0	0	1	1	0	1	0	0	0	1	0	1
0	1	0	0	1	1	0	1	0	0	0	1	1	1
0	1	0	0	1	1	0	1	0	0	1	0	0	1
0	1	0	0	1	1	0	1	0	0	1	0	1	1
0	1	0	0	1	1	0	1	0	0	1	1	0	1
0	1	0	0	1	1	0	1	0	0	1	1	1	1
0	1	0	0	1	1	0	1	0	1	0	0	0	1
0	1	0	0	1	1	0	1	0	1	0	0	1	1
0	1	0	0	1	1	0	1	0	1	0	1	0	1
0	1	0	0	1	1	0	1	0	1	0	1	1	1
0	1	0	0	1	1	0	1	0	1	1	0	0	1
0	1	0	0	1	1	0	1	0	1	1	0	1	1
0	1	0	0	1	1	0	1	0	1	1	1	0	1
0	1	0	0	1	1	0	1	0	1	1	1	1	1
0	1	0	0	1	1	0	1	1	0	0	0	0	1
0	1	0	0	1	1	0	1	1	0	0	0	1	1
0	1	0	0	1	1	0	1	1	0	0	1	0	1
0	1	0	0	1	1	0	1	1	0	0	1	1	1
0	1	0	0	1	1	0	1	1	0	1	0	0	1
0	1	0	0	1	1	0	1	1	0	1	0	1	1
0	1	0	0	1	1	0	1	1	0	1	1	0	1
0	1	0	0	1	1	0	1	1	0	1	1	1	1
0	1	0	0	1	1	0	1	1	1	0	0	0	1
0	1	0	0	1	1	0	1	1	1	0	0	1	1
0	1	0	0	1	1	0	1	1	1	0	1	0	1
0	1	0	0	1	1	0	1	1	1	0	1	1	1
0	1	0	0	1	1	0	1	1	1	1	0	0	1
0	1	0	0	1	1	0	1	1	1	1	0	1	1
0	1	0	0	1	1	0	1	1	1	1	1	0	1
0	1	0	0	1	1	0	1	1	1	1	1	1	1
0	1	0	0	1	1	1	0	0	0	0	0	0	1

0	1	0	0	1	1	1	0	0	0	0	0	1	1
0	1	0	0	1	1	1	0	0	0	0	1	0	1
0	1	0	0	1	1	1	0	0	0	0	1	1	1
0	1	0	0	1	1	1	0	0	0	1	0	0	1
0	1	0	0	1	1	1	0	0	0	1	0	1	1
0	1	0	0	1	1	1	0	0	0	1	1	0	1
0	1	0	0	1	1	1	0	0	0	1	1	1	1
0	1	0	0	1	1	1	0	0	1	0	0	0	1
0	1	0	0	1	1	1	0	0	1	0	0	1	1
0	1	0	0	1	1	1	0	0	1	0	1	0	1
0	1	0	0	1	1	1	0	0	1	0	1	1	1
0	1	0	0	1	1	1	0	0	1	1	0	0	1
0	1	0	0	1	1	1	0	0	1	1	0	1	1
0	1	0	0	1	1	1	0	0	1	1	1	0	1
0	1	0	0	1	1	1	0	0	1	1	1	1	1
0	1	0	0	1	1	1	0	1	0	0	0	0	1
0	1	0	0	1	1	1	0	1	0	0	0	1	1
0	1	0	0	1	1	1	0	1	0	0	1	0	1
0	1	0	0	1	1	1	0	1	0	0	1	1	1
0	1	0	0	1	1	1	0	1	0	1	0	0	1
0	1	0	0	1	1	1	0	1	0	1	0	1	1
0	1	0	0	1	1	1	0	1	0	1	1	0	1
0	1	0	0	1	1	1	0	1	0	1	1	1	1
0	1	0	0	1	1	1	0	1	1	0	0	0	1
0	1	0	0	1	1	1	0	1	1	0	0	1	1
0	1	0	0	1	1	1	0	1	1	0	1	0	1
0	1	0	0	1	1	1	0	1	1	0	1	1	1
0	1	0	0	1	1	1	0	1	1	1	0	0	1
0	1	0	0	1	1	1	0	1	1	1	0	1	1
0	1	0	0	1	1	1	0	1	1	1	1	0	1
0	1	0	0	1	1	1	0	1	1	1	1	1	1
0	1	0	0	1	1	1	1	0	0	1	0	0	1
0	1	0	0	1	1	1	1	0	0	0	0	1	1
0	1	0	0	1	1	1	1	0	0	0	1	0	1
0	1	0	0	1	1	1	1	0	0	0	1	1	1
0	1	0	0	1	1	1	1	0	0	0	0	0	1
0	1	0	0	1	1	1	1	0	0	1	0	1	1
0	1	0	0	1	1	1	1	0	0	1	1	0	1
0	1	0	0	1	1	1	1	0	0	1	1	1	1
0	1	0	0	1	1	1	1	0	1	1	0	0	1
0	1	0	0	1	1	1	1	0	1	0	0	1	1
0	1	0	0	1	1	1	1	0	1	0	1	0	1
0	1	0	0	1	1	1	1	0	1	0	1	1	1
0	1	0	0	1	1	1	1	0	1	0	0	0	1
0	1	0	0	1	1	1	1	0	1	1	0	1	1
0	1	0	0	1	1	1	1	0	1	1	1	0	1

0	1	0	0	1	1	1	1	0	1	1	1	1	1
0	1	0	0	1	1	1	1	1	0	1	0	0	1
0	1	0	0	1	1	1	1	1	0	0	0	1	1
0	1	0	0	1	1	1	1	1	0	0	1	0	1
0	1	0	0	1	1	1	1	1	0	0	1	1	1
0	1	0	0	1	1	1	1	1	0	0	0	0	1
0	1	0	0	1	1	1	1	1	0	1	0	1	1
0	1	0	0	1	1	1	1	1	0	1	1	0	1
0	1	0	0	1	1	1	1	1	0	1	1	1	1
0	1	0	0	1	1	1	1	1	1	1	0	0	1
0	1	0	0	1	1	1	1	1	1	0	0	1	1
0	1	0	0	1	1	1	1	1	1	0	1	0	1
0	1	0	0	1	1	1	1	1	1	0	1	1	1
0	1	0	0	1	1	1	1	1	1	0	0	0	1
0	1	0	0	1	1	1	1	1	1	1	0	1	1
0	1	0	0	1	1	1	1	1	1	1	1	0	1
0	1	0	0	1	1	1	1	1	1	1	1	1	1
0	1	0	1	0	0	0	0	0	0	0	0	0	1
0	1	0	1	0	0	0	0	0	0	0	0	1	1
0	1	0	1	0	0	0	0	0	0	0	1	0	1
0	1	0	1	0	0	0	0	0	0	0	1	1	1
0	1	0	1	0	0	0	0	0	0	1	0	0	1
0	1	0	1	0	0	0	0	0	0	1	0	1	1
0	1	0	1	0	0	0	0	0	0	1	1	0	1
0	1	0	1	0	0	0	0	0	0	1	1	1	1
0	1	0	1	0	0	0	0	0	1	0	0	0	1
0	1	0	1	0	0	0	0	0	1	0	0	1	1
0	1	0	1	0	0	0	0	0	1	0	1	0	1
0	1	0	1	0	0	0	0	0	1	0	1	1	1
0	1	0	1	0	0	0	0	0	1	1	0	0	1
0	1	0	1	0	0	0	0	0	1	1	0	1	1
0	1	0	1	0	0	0	0	0	1	1	1	0	1
0	1	0	1	0	0	0	0	0	1	1	1	1	1
0	1	0	1	0	0	0	0	1	0	0	0	0	1
0	1	0	1	0	0	0	0	1	0	0	0	1	1
0	1	0	1	0	0	0	0	1	0	0	1	0	1
0	1	0	1	0	0	0	0	1	0	0	1	1	1
0	1	0	1	0	0	0	0	1	0	1	0	0	1
0	1	0	1	0	0	0	0	1	0	1	0	1	1
0	1	0	1	0	0	0	0	1	0	1	1	0	1
0	1	0	1	0	0	0	0	1	0	1	1	1	1
0	1	0	1	0	0	0	0	1	1	0	0	0	1
0	1	0	1	0	0	0	0	1	1	0	0	1	1
0	1	0	1	0	0	0	0	1	1	0	1	0	1
0	1	0	1	0	0	0	0	1	1	0	1	1	1
0	1	0	1	0	0	0	0	1	1	1	0	0	1

0	1	0	1	0	0	0	0	1	1	1	0	1	1
0	1	0	1	0	0	0	0	1	1	1	1	0	1
0	1	0	1	0	0	0	0	1	1	1	1	1	1
0	1	0	1	0	0	0	1	0	0	0	0	0	1
0	1	0	1	0	0	0	1	0	0	0	0	1	1
0	1	0	1	0	0	0	1	0	0	0	1	0	1
0	1	0	1	0	0	0	1	0	0	0	1	1	1
0	1	0	1	0	0	0	1	0	0	1	0	0	1
0	1	0	1	0	0	0	1	0	0	1	0	1	1
0	1	0	1	0	0	0	1	0	0	1	1	0	1
0	1	0	1	0	0	0	1	0	0	1	1	1	1
0	1	0	1	0	0	0	1	0	1	0	0	0	1
0	1	0	1	0	0	0	1	0	1	0	0	1	1
0	1	0	1	0	0	0	1	0	1	0	1	0	1
0	1	0	1	0	0	0	1	0	1	0	1	1	1
0	1	0	1	0	0	0	1	0	1	1	0	0	1
0	1	0	1	0	0	0	1	0	1	1	0	1	1
0	1	0	1	0	0	0	1	0	1	1	1	0	1
0	1	0	1	0	0	0	1	0	1	1	1	1	1
0	1	0	1	0	0	0	1	1	0	0	0	0	1
0	1	0	1	0	0	0	1	1	0	0	0	1	1
0	1	0	1	0	0	0	1	1	0	0	1	0	1
0	1	0	1	0	0	0	1	1	0	0	1	1	1
0	1	0	1	0	0	0	1	1	0	1	0	0	1
0	1	0	1	0	0	0	1	1	0	1	0	1	1
0	1	0	1	0	0	0	1	1	0	1	1	0	1
0	1	0	1	0	0	0	1	1	0	1	1	1	1
0	1	0	1	0	0	0	1	1	1	0	0	0	1
0	1	0	1	0	0	0	1	1	1	0	0	1	1
0	1	0	1	0	0	0	1	1	1	0	1	0	1
0	1	0	1	0	0	0	1	1	1	0	1	1	1
0	1	0	1	0	0	0	1	1	1	1	0	0	1
0	1	0	1	0	0	0	1	1	1	1	0	1	1
0	1	0	1	0	0	0	1	1	1	1	1	0	1
0	1	0	1	0	0	0	1	1	1	1	1	1	1
0	1	0	1	0	0	1	0	0	0	0	0	0	1
0	1	0	1	0	0	1	0	0	0	0	0	1	1
0	1	0	1	0	0	1	0	0	0	0	1	0	1
0	1	0	1	0	0	1	0	0	0	0	1	1	1
0	1	0	1	0	0	1	0	0	0	1	0	0	1
0	1	0	1	0	0	1	0	0	0	1	0	1	1
0	1	0	1	0	0	1	0	0	0	1	1	0	1
0	1	0	1	0	0	1	0	0	0	1	1	1	1
0	1	0	1	0	0	1	0	0	1	0	0	0	1
0	1	0	1	0	0	1	0	0	1	0	0	1	1
0	1	0	1	0	0	1	0	0	1	0	1	0	1

0	1	0	1	0	0	1	0	0	1	0	1	1	1
0	1	0	1	0	0	1	0	0	1	1	0	0	1
0	1	0	1	0	0	1	0	0	1	1	0	1	1
0	1	0	1	0	0	1	0	0	1	1	1	0	1
0	1	0	1	0	0	1	0	0	1	1	1	1	1
0	1	0	1	0	0	1	0	1	0	0	0	0	1
0	1	0	1	0	0	1	0	1	0	0	0	1	1
0	1	0	1	0	0	1	0	1	0	0	1	0	1
0	1	0	1	0	0	1	0	1	0	0	1	1	1
0	1	0	1	0	0	1	0	1	0	1	0	0	1
0	1	0	1	0	0	1	0	1	0	1	0	1	1
0	1	0	1	0	0	1	0	1	0	1	1	0	1
0	1	0	1	0	0	1	0	1	0	1	1	1	1
0	1	0	1	0	0	1	0	1	1	0	0	0	1
0	1	0	1	0	0	1	0	1	1	0	0	1	1
0	1	0	1	0	0	1	0	1	1	0	1	0	1
0	1	0	1	0	0	1	0	1	1	0	1	1	1
0	1	0	1	0	0	1	0	1	1	1	0	0	1
0	1	0	1	0	0	1	0	1	1	1	0	1	1
0	1	0	1	0	0	1	0	1	1	1	1	0	1
0	1	0	1	0	0	1	0	1	1	1	1	1	1
0	1	0	1	0	0	1	1	0	0	0	0	0	1
0	1	0	1	0	0	1	1	0	0	0	0	1	1
0	1	0	1	0	0	1	1	0	0	0	1	0	1
0	1	0	1	0	0	1	1	0	0	0	1	1	1
0	1	0	1	0	0	1	1	0	0	1	0	0	1
0	1	0	1	0	0	1	1	0	0	1	0	1	1
0	1	0	1	0	0	1	1	0	0	1	1	0	1
0	1	0	1	0	0	1	1	0	0	1	1	1	1
0	1	0	1	0	0	1	1	0	1	0	0	0	1
0	1	0	1	0	0	1	1	0	1	0	0	1	1
0	1	0	1	0	0	1	1	0	1	0	1	0	1
0	1	0	1	0	0	1	1	0	1	0	1	1	1
0	1	0	1	0	0	1	1	0	1	1	0	0	1
0	1	0	1	0	0	1	1	0	1	1	0	1	1
0	1	0	1	0	0	1	1	0	1	1	1	0	1
0	1	0	1	0	0	1	1	0	1	1	1	1	1
0	1	0	1	0	0	1	1	1	0	0	0	0	1
0	1	0	1	0	0	1	1	1	0	0	0	1	1
0	1	0	1	0	0	1	1	1	0	0	1	0	1
0	1	0	1	0	0	1	1	1	0	0	1	1	1
0	1	0	1	0	0	1	1	1	0	1	0	0	1
0	1	0	1	0	0	1	1	1	0	1	0	1	1
0	1	0	1	0	0	1	1	1	0	1	1	0	1
0	1	0	1	0	0	1	1	1	0	1	1	1	1
0	1	0	1	0	0	1	1	1	1	0	0	0	1

0	1	0	1	0	0	1	1	1	1	0	0	1	1
0	1	0	1	0	0	1	1	1	1	0	1	0	1
0	1	0	1	0	0	1	1	1	1	0	1	1	1
0	1	0	1	0	0	1	1	1	1	1	0	0	1
0	1	0	1	0	0	1	1	1	1	1	0	1	1
0	1	0	1	0	0	1	1	1	1	1	1	0	1
0	1	0	1	0	0	1	1	1	1	1	1	1	1
0	1	0	1	0	1	0	0	0	0	0	0	0	1
0	1	0	1	0	1	0	0	0	0	0	0	1	1
0	1	0	1	0	1	0	0	0	0	0	1	0	1
0	1	0	1	0	1	0	0	0	0	0	1	1	1
0	1	0	1	0	1	0	0	0	0	1	0	0	1
0	1	0	1	0	1	0	0	0	0	1	0	1	1
0	1	0	1	0	1	0	0	0	0	1	1	0	1
0	1	0	1	0	1	0	0	0	0	1	1	1	1
0	1	0	1	0	1	0	0	0	1	0	0	0	1
0	1	0	1	0	1	0	0	0	1	0	0	1	1
0	1	0	1	0	1	0	0	0	1	0	1	0	1
0	1	0	1	0	1	0	0	0	1	0	1	1	1
0	1	0	1	0	1	0	0	0	1	1	0	0	1
0	1	0	1	0	1	0	0	0	1	1	0	1	1
0	1	0	1	0	1	0	0	0	1	1	1	0	1
0	1	0	1	0	1	0	0	0	1	1	1	1	1
0	1	0	1	0	1	0	0	1	0	0	0	0	1
0	1	0	1	0	1	0	0	1	0	0	0	1	1
0	1	0	1	0	1	0	0	1	0	0	1	0	1
0	1	0	1	0	1	0	0	1	0	0	1	1	1
0	1	0	1	0	1	0	0	1	0	1	0	0	1
0	1	0	1	0	1	0	0	1	0	1	0	1	1
0	1	0	1	0	1	0	0	1	0	1	1	0	1
0	1	0	1	0	1	0	0	1	0	1	1	1	1
0	1	0	1	0	1	0	0	1	1	0	0	0	1
0	1	0	1	0	1	0	0	1	1	0	0	1	1
0	1	0	1	0	1	0	0	1	1	0	1	0	1
0	1	0	1	0	1	0	0	1	1	0	1	1	1
0	1	0	1	0	1	0	0	1	1	1	0	0	1
0	1	0	1	0	1	0	0	1	1	1	0	1	1
0	1	0	1	0	1	0	0	1	1	1	1	0	1
0	1	0	1	0	1	0	0	1	1	1	1	1	1
0	1	0	1	0	1	0	1	0	0	0	0	0	1
0	1	0	1	0	1	0	1	0	0	0	0	1	1
0	1	0	1	0	1	0	1	0	0	0	1	0	1
0	1	0	1	0	1	0	1	0	0	0	1	1	1
0	1	0	1	0	1	0	1	0	0	1	0	0	1
0	1	0	1	0	1	0	1	0	0	1	0	1	1
0	1	0	1	0	1	0	1	0	0	1	1	0	1

0	1	0	1	0	1	0	1	0	0	1	1	1	1
0	1	0	1	0	1	0	1	0	1	0	0	0	1
0	1	0	1	0	1	0	1	0	1	0	0	1	1
0	1	0	1	0	1	0	1	0	1	0	1	0	1
0	1	0	1	0	1	0	1	0	1	0	1	1	1
0	1	0	1	0	1	0	1	0	1	1	0	0	1
0	1	0	1	0	1	0	1	0	1	1	0	1	1
0	1	0	1	0	1	0	1	0	1	1	1	0	1
0	1	0	1	0	1	0	1	0	1	1	1	1	1
0	1	0	1	0	1	0	1	1	0	0	0	0	1
0	1	0	1	0	1	0	1	1	0	0	0	1	1
0	1	0	1	0	1	0	1	1	0	0	1	0	1
0	1	0	1	0	1	0	1	1	0	0	1	1	1
0	1	0	1	0	1	0	1	1	0	1	0	0	1
0	1	0	1	0	1	0	1	1	0	1	0	1	1
0	1	0	1	0	1	0	1	1	0	1	1	0	1
0	1	0	1	0	1	0	1	1	0	1	1	1	1
0	1	0	1	0	1	0	1	1	1	0	0	0	1
0	1	0	1	0	1	0	1	1	1	0	0	1	1
0	1	0	1	0	1	0	1	1	1	0	1	0	1
0	1	0	1	0	1	0	1	1	1	0	1	1	1
0	1	0	1	0	1	0	1	1	1	1	0	0	1
0	1	0	1	0	1	0	1	1	1	1	0	1	1
0	1	0	1	0	1	0	1	1	1	1	1	0	1
0	1	0	1	0	1	0	1	1	1	1	1	1	1
0	1	0	1	0	1	1	0	0	0	0	0	0	1
0	1	0	1	0	1	1	0	0	0	0	0	1	1
0	1	0	1	0	1	1	0	0	0	0	1	0	1
0	1	0	1	0	1	1	0	0	0	0	1	1	1
0	1	0	1	0	1	1	0	0	0	1	0	0	1
0	1	0	1	0	1	1	0	0	0	1	0	1	1
0	1	0	1	0	1	1	0	0	0	1	1	0	1
0	1	0	1	0	1	1	0	0	0	1	1	1	1
0	1	0	1	0	1	1	0	0	1	0	0	0	1
0	1	0	1	0	1	1	0	0	1	0	0	1	1
0	1	0	1	0	1	1	0	0	1	0	1	0	1
0	1	0	1	0	1	1	0	0	1	0	1	1	1
0	1	0	1	0	1	1	0	0	1	1	0	0	1
0	1	0	1	0	1	1	0	0	1	1	0	1	1
0	1	0	1	0	1	1	0	0	1	1	1	0	1
0	1	0	1	0	1	1	0	0	1	1	1	1	1
0	1	0	1	0	1	1	0	1	0	0	0	0	1
0	1	0	1	0	1	1	0	1	0	0	0	1	1
0	1	0	1	0	1	1	0	1	0	0	1	0	1
0	1	0	1	0	1	1	0	1	0	0	1	1	1
0	1	0	1	0	1	1	0	1	0	1	0	0	1

0	1	0	1	0	1	1	0	1	0	1	0	1	1
0	1	0	1	0	1	1	0	1	0	1	1	0	1
0	1	0	1	0	1	1	0	1	0	1	1	1	1
0	1	0	1	0	1	1	0	1	1	0	0	0	1
0	1	0	1	0	1	1	0	1	1	0	0	1	1
0	1	0	1	0	1	1	0	1	1	0	1	0	1
0	1	0	1	0	1	1	0	1	1	0	1	1	1
0	1	0	1	0	1	1	0	1	1	1	0	0	1
0	1	0	1	0	1	1	0	1	1	1	0	1	1
0	1	0	1	0	1	1	0	1	1	1	1	0	1
0	1	0	1	0	1	1	0	1	1	1	1	1	1
0	1	0	1	0	1	1	1	0	0	1	0	0	1
0	1	0	1	0	1	1	1	0	0	0	0	1	1
0	1	0	1	0	1	1	1	0	0	0	1	0	1
0	1	0	1	0	1	1	1	0	0	0	1	1	1
0	1	0	1	0	1	1	1	0	0	0	0	0	1
0	1	0	1	0	1	1	1	0	0	1	0	1	1
0	1	0	1	0	1	1	1	0	0	1	1	0	1
0	1	0	1	0	1	1	1	0	0	1	1	1	1
0	1	0	1	0	1	1	1	0	1	1	0	0	1
0	1	0	1	0	1	1	1	0	1	0	0	1	1
0	1	0	1	0	1	1	1	0	1	0	1	0	1
0	1	0	1	0	1	1	1	0	1	0	1	1	1
0	1	0	1	0	1	1	1	0	1	0	0	0	1
0	1	0	1	0	1	1	1	0	1	1	0	1	1
0	1	0	1	0	1	1	1	0	1	1	1	0	1
0	1	0	1	0	1	1	1	0	1	1	1	1	1
0	1	0	1	0	1	1	1	1	0	1	0	0	1
0	1	0	1	0	1	1	1	1	0	0	0	1	1
0	1	0	1	0	1	1	1	1	0	0	1	0	1
0	1	0	1	0	1	1	1	1	0	0	1	1	1
0	1	0	1	0	1	1	1	1	0	0	0	0	1
0	1	0	1	0	1	1	1	1	0	1	0	1	1
0	1	0	1	0	1	1	1	1	0	1	1	0	1
0	1	0	1	0	1	1	1	1	0	1	1	1	1
0	1	0	1	0	1	1	1	1	1	1	0	0	1
0	1	0	1	0	1	1	1	1	1	0	0	1	1
0	1	0	1	0	1	1	1	1	1	0	1	0	1
0	1	0	1	0	1	1	1	1	1	0	1	1	1
0	1	0	1	0	1	1	1	1	1	0	0	0	1
0	1	0	1	0	1	1	1	1	1	1	0	1	1
0	1	0	1	0	1	1	1	1	1	1	1	0	1
0	1	0	1	0	1	1	1	1	1	1	1	1	1
0	1	0	1	1	0	0	0	0	0	0	0	0	1
0	1	0	1	1	0	0	0	0	0	0	0	1	1
0	1	0	1	1	0	0	0	0	0	0	1	0	1

0	1	0	1	1	0	0	0	0	0	0	1	1	1
0	1	0	1	1	0	0	0	0	0	1	0	0	1
0	1	0	1	1	0	0	0	0	0	1	0	1	1
0	1	0	1	1	0	0	0	0	0	1	1	0	1
0	1	0	1	1	0	0	0	0	0	1	1	1	1
0	1	0	1	1	0	0	0	0	1	0	0	0	1
0	1	0	1	1	0	0	0	0	1	0	0	1	1
0	1	0	1	1	0	0	0	0	1	0	1	0	1
0	1	0	1	1	0	0	0	0	1	0	1	1	1
0	1	0	1	1	0	0	0	0	1	1	0	0	1
0	1	0	1	1	0	0	0	0	1	1	0	1	1
0	1	0	1	1	0	0	0	0	1	1	1	0	1
0	1	0	1	1	0	0	0	0	1	1	1	1	1
0	1	0	1	1	0	0	0	1	0	0	0	0	1
0	1	0	1	1	0	0	0	1	0	0	0	1	1
0	1	0	1	1	0	0	0	1	0	0	1	0	1
0	1	0	1	1	0	0	0	1	0	0	1	1	1
0	1	0	1	1	0	0	0	1	0	1	0	0	1
0	1	0	1	1	0	0	0	1	0	1	0	1	1
0	1	0	1	1	0	0	0	1	0	1	1	0	1
0	1	0	1	1	0	0	0	1	0	1	1	1	1
0	1	0	1	1	0	0	0	1	1	0	0	0	1
0	1	0	1	1	0	0	0	1	1	0	0	1	1
0	1	0	1	1	0	0	0	1	1	0	1	0	1
0	1	0	1	1	0	0	0	1	1	0	1	1	1
0	1	0	1	1	0	0	0	1	1	1	0	0	1
0	1	0	1	1	0	0	0	1	1	1	0	1	1
0	1	0	1	1	0	0	0	1	1	1	1	0	1
0	1	0	1	1	0	0	0	1	1	1	1	1	1
0	1	0	1	1	0	0	1	0	0	0	0	0	1
0	1	0	1	1	0	0	1	0	0	0	0	1	1
0	1	0	1	1	0	0	1	0	0	0	1	0	1
0	1	0	1	1	0	0	1	0	0	0	1	1	1
0	1	0	1	1	0	0	1	0	0	1	0	0	1
0	1	0	1	1	0	0	1	0	0	1	0	1	1
0	1	0	1	1	0	0	1	0	0	1	1	0	1
0	1	0	1	1	0	0	1	0	0	1	1	1	1
0	1	0	1	1	0	0	1	0	1	0	0	0	1
0	1	0	1	1	0	0	1	0	1	0	0	1	1
0	1	0	1	1	0	0	1	0	1	0	1	0	1
0	1	0	1	1	0	0	1	0	1	0	1	1	1
0	1	0	1	1	0	0	1	0	1	1	0	0	1
0	1	0	1	1	0	0	1	0	1	1	0	1	1
0	1	0	1	1	0	0	1	0	1	1	1	0	1
0	1	0	1	1	0	0	1	0	1	1	1	1	1
0	1	0	1	1	0	0	1	1	0	0	0	0	1

0	1	0	1	1	0	0	1	1	0	0	0	1	1
0	1	0	1	1	0	0	1	1	0	0	1	0	1
0	1	0	1	1	0	0	1	1	0	0	1	1	1
0	1	0	1	1	0	0	1	1	0	1	0	0	1
0	1	0	1	1	0	0	1	1	0	1	0	1	1
0	1	0	1	1	0	0	1	1	0	1	1	0	1
0	1	0	1	1	0	0	1	1	0	1	1	1	1
0	1	0	1	1	0	0	1	1	1	0	0	0	1
0	1	0	1	1	0	0	1	1	1	0	0	1	1
0	1	0	1	1	0	0	1	1	1	0	1	0	1
0	1	0	1	1	0	0	1	1	1	0	1	1	1
0	1	0	1	1	0	0	1	1	1	1	0	0	1
0	1	0	1	1	0	0	1	1	1	1	0	1	1
0	1	0	1	1	0	0	1	1	1	1	1	0	1
0	1	0	1	1	0	0	1	1	1	1	1	1	1
0	1	0	1	1	0	1	0	0	0	0	0	0	1
0	1	0	1	1	0	1	0	0	0	0	0	1	1
0	1	0	1	1	0	1	0	0	0	0	1	0	1
0	1	0	1	1	0	1	0	0	0	0	1	1	1
0	1	0	1	1	0	1	0	0	0	1	0	0	1
0	1	0	1	1	0	1	0	0	0	1	0	1	1
0	1	0	1	1	0	1	0	0	0	1	1	0	1
0	1	0	1	1	0	1	0	0	0	1	1	1	1
0	1	0	1	1	0	1	0	0	1	0	0	0	1
0	1	0	1	1	0	1	0	0	1	0	0	1	1
0	1	0	1	1	0	1	0	0	1	0	1	0	1
0	1	0	1	1	0	1	0	0	1	0	1	1	1
0	1	0	1	1	0	1	0	0	1	1	0	0	1
0	1	0	1	1	0	1	0	0	1	1	0	1	1
0	1	0	1	1	0	1	0	0	1	1	1	0	1
0	1	0	1	1	0	1	0	0	1	1	1	1	1
0	1	0	1	1	0	1	0	1	0	0	0	0	1
0	1	0	1	1	0	1	0	1	0	0	0	1	1
0	1	0	1	1	0	1	0	1	0	0	1	0	1
0	1	0	1	1	0	1	0	1	0	0	1	1	1
0	1	0	1	1	0	1	0	1	0	1	0	0	1
0	1	0	1	1	0	1	0	1	0	1	0	1	1
0	1	0	1	1	0	1	0	1	0	1	1	0	1
0	1	0	1	1	0	1	0	1	0	1	1	1	1
0	1	0	1	1	0	1	0	1	1	0	0	0	1
0	1	0	1	1	0	1	0	1	1	0	0	1	1
0	1	0	1	1	0	1	0	1	1	0	1	0	1
0	1	0	1	1	0	1	0	1	1	0	1	1	1
0	1	0	1	1	0	1	0	1	1	1	0	0	1
0	1	0	1	1	0	1	0	1	1	1	0	1	1
0	1	0	1	1	0	1	0	1	1	1	1	0	1

0	1	0	1	1	0	1	0	1	1	1	1	1	1
0	1	0	1	1	0	1	1	0	0	0	0	0	1
0	1	0	1	1	0	1	1	0	0	0	0	1	1
0	1	0	1	1	0	1	1	0	0	0	1	0	1
0	1	0	1	1	0	1	1	0	0	0	1	1	1
0	1	0	1	1	0	1	1	0	0	1	0	0	1
0	1	0	1	1	0	1	1	0	0	1	0	1	1
0	1	0	1	1	0	1	1	0	0	1	1	0	1
0	1	0	1	1	0	1	1	0	0	1	1	1	1
0	1	0	1	1	0	1	1	0	1	0	0	0	1
0	1	0	1	1	0	1	1	0	1	0	0	1	1
0	1	0	1	1	0	1	1	0	1	0	1	0	1
0	1	0	1	1	0	1	1	0	1	0	1	1	1
0	1	0	1	1	0	1	1	0	1	1	0	0	1
0	1	0	1	1	0	1	1	0	1	1	0	1	1
0	1	0	1	1	0	1	1	0	1	1	1	0	1
0	1	0	1	1	0	1	1	0	1	1	1	1	1
0	1	0	1	1	0	1	1	1	0	0	0	0	1
0	1	0	1	1	0	1	1	1	0	0	0	1	1
0	1	0	1	1	0	1	1	1	0	0	1	0	1
0	1	0	1	1	0	1	1	1	0	0	1	1	1
0	1	0	1	1	0	1	1	1	0	1	0	0	1
0	1	0	1	1	0	1	1	1	0	1	0	1	1
0	1	0	1	1	0	1	1	1	0	1	1	0	1
0	1	0	1	1	0	1	1	1	0	1	1	1	1
0	1	0	1	1	0	1	1	1	1	0	0	0	1
0	1	0	1	1	0	1	1	1	1	0	0	1	1
0	1	0	1	1	0	1	1	1	1	0	1	0	1
0	1	0	1	1	0	1	1	1	1	0	1	1	1
0	1	0	1	1	0	1	1	1	1	1	0	0	1
0	1	0	1	1	0	1	1	1	1	1	0	1	1
0	1	0	1	1	0	1	1	1	1	1	1	0	1
0	1	0	1	1	0	1	1	1	1	1	1	1	1
0	1	0	1	1	1	0	0	0	0	0	0	0	1
0	1	0	1	1	1	0	0	0	0	0	0	1	1
0	1	0	1	1	1	0	0	0	0	0	1	0	1
0	1	0	1	1	1	0	0	0	0	0	1	1	1
0	1	0	1	1	1	0	0	0	0	1	0	0	1
0	1	0	1	1	1	0	0	0	0	1	0	1	1
0	1	0	1	1	1	0	0	0	0	1	1	0	1
0	1	0	1	1	1	0	0	0	0	1	1	1	1
0	1	0	1	1	1	0	0	0	1	0	0	0	1
0	1	0	1	1	1	0	0	0	1	0	0	1	1
0	1	0	1	1	1	0	0	0	1	0	1	0	1
0	1	0	1	1	1	0	0	0	1	0	1	1	1
0	1	0	1	1	1	0	0	0	1	1	0	0	1

0	1	0	1	1	1	0	0	0	1	1	0	1	1
0	1	0	1	1	1	0	0	0	1	1	1	0	1
0	1	0	1	1	1	0	0	0	1	1	1	1	1
0	1	0	1	1	1	0	0	1	0	0	0	0	1
0	1	0	1	1	1	0	0	1	0	0	0	1	1
0	1	0	1	1	1	0	0	1	0	0	1	0	1
0	1	0	1	1	1	0	0	1	0	0	1	1	1
0	1	0	1	1	1	0	0	1	0	1	0	0	1
0	1	0	1	1	1	0	0	1	0	1	0	1	1
0	1	0	1	1	1	0	0	1	0	1	1	0	1
0	1	0	1	1	1	0	0	1	0	1	1	1	1
0	1	0	1	1	1	0	0	1	1	0	0	0	1
0	1	0	1	1	1	0	0	1	1	0	0	1	1
0	1	0	1	1	1	0	0	1	1	0	1	0	1
0	1	0	1	1	1	0	0	1	1	0	1	1	1
0	1	0	1	1	1	0	0	1	1	1	0	0	1
0	1	0	1	1	1	0	0	1	1	1	0	1	1
0	1	0	1	1	1	0	0	1	1	1	1	0	1
0	1	0	1	1	1	0	0	1	1	1	1	1	1
0	1	0	1	1	1	0	1	0	0	0	0	0	1
0	1	0	1	1	1	0	1	0	0	0	0	1	1
0	1	0	1	1	1	0	1	0	0	0	1	0	1
0	1	0	1	1	1	0	1	0	0	0	1	1	1
0	1	0	1	1	1	0	1	0	0	1	0	0	1
0	1	0	1	1	1	0	1	0	0	1	0	1	1
0	1	0	1	1	1	0	1	0	0	1	1	0	1
0	1	0	1	1	1	0	1	0	0	1	1	1	1
0	1	0	1	1	1	0	1	0	1	0	0	0	1
0	1	0	1	1	1	0	1	0	1	0	0	1	1
0	1	0	1	1	1	0	1	0	1	0	1	0	1
0	1	0	1	1	1	0	1	0	1	0	1	1	1
0	1	0	1	1	1	0	1	0	1	1	0	0	1
0	1	0	1	1	1	0	1	0	1	1	0	1	1
0	1	0	1	1	1	0	1	0	1	1	1	0	1
0	1	0	1	1	1	0	1	0	1	1	1	1	1
0	1	0	1	1	1	0	1	1	0	0	0	0	1
0	1	0	1	1	1	0	1	1	0	0	0	1	1
0	1	0	1	1	1	0	1	1	0	0	1	0	1
0	1	0	1	1	1	0	1	1	0	0	1	1	1
0	1	0	1	1	1	0	1	1	0	1	0	0	1
0	1	0	1	1	1	0	1	1	0	1	0	1	1
0	1	0	1	1	1	0	1	1	0	1	1	0	1
0	1	0	1	1	1	0	1	1	0	1	1	1	1
0	1	0	1	1	1	0	1	1	1	0	0	0	1
0	1	0	1	1	1	0	1	1	1	0	0	1	1
0	1	0	1	1	1	0	1	1	1	0	1	0	1

0	1	0	1	1	1	0	1	1	1	0	1	1	1
0	1	0	1	1	1	0	1	1	1	1	0	0	1
0	1	0	1	1	1	0	1	1	1	1	0	1	1
0	1	0	1	1	1	0	1	1	1	1	1	0	1
0	1	0	1	1	1	0	1	1	1	1	1	1	1
0	1	0	1	1	1	1	0	0	0	0	0	0	1
0	1	0	1	1	1	1	0	0	0	0	0	1	1
0	1	0	1	1	1	1	0	0	0	0	1	0	1
0	1	0	1	1	1	1	0	0	0	0	1	1	1
0	1	0	1	1	1	1	0	0	0	1	0	0	1
0	1	0	1	1	1	1	0	0	0	1	0	1	1
0	1	0	1	1	1	1	0	0	0	1	1	0	1
0	1	0	1	1	1	1	0	0	0	1	1	1	1
0	1	0	1	1	1	1	0	0	1	0	0	0	1
0	1	0	1	1	1	1	0	0	1	0	0	1	1
0	1	0	1	1	1	1	0	0	1	0	1	0	1
0	1	0	1	1	1	1	0	0	1	0	1	1	1
0	1	0	1	1	1	1	0	0	1	1	0	0	1
0	1	0	1	1	1	1	0	0	1	1	0	1	1
0	1	0	1	1	1	1	0	0	1	1	1	0	1
0	1	0	1	1	1	1	0	0	1	1	1	1	1
0	1	0	1	1	1	1	0	1	0	0	0	0	1
0	1	0	1	1	1	1	0	1	0	0	0	1	1
0	1	0	1	1	1	1	0	1	0	0	1	0	1
0	1	0	1	1	1	1	0	1	0	0	1	1	1
0	1	0	1	1	1	1	0	1	0	1	0	0	1
0	1	0	1	1	1	1	0	1	0	1	0	1	1
0	1	0	1	1	1	1	0	1	0	1	1	0	1
0	1	0	1	1	1	1	0	1	0	1	1	1	1
0	1	0	1	1	1	1	0	1	1	0	0	0	1
0	1	0	1	1	1	1	0	1	1	0	0	1	1
0	1	0	1	1	1	1	0	1	1	0	1	0	1
0	1	0	1	1	1	1	0	1	1	0	1	1	1
0	1	0	1	1	1	1	0	1	1	1	0	0	1
0	1	0	1	1	1	1	0	1	1	1	0	1	1
0	1	0	1	1	1	1	0	1	1	1	1	0	1
0	1	0	1	1	1	1	0	1	1	1	1	1	1
0	1	0	1	1	1	1	1	0	0	1	0	0	1
0	1	0	1	1	1	1	1	0	0	0	0	1	1
0	1	0	1	1	1	1	1	0	0	0	1	0	1
0	1	0	1	1	1	1	1	0	0	0	1	1	1
0	1	0	1	1	1	1	1	0	0	0	0	0	1
0	1	0	1	1	1	1	1	0	0	1	0	1	1
0	1	0	1	1	1	1	1	0	0	1	1	0	1
0	1	0	1	1	1	1	1	0	0	1	1	1	1
0	1	0	1	1	1	1	1	0	1	1	0	0	1

0	1	0	1	1	1	1	1	0	1	0	0	1	1
0	1	0	1	1	1	1	1	0	1	0	1	0	1
0	1	0	1	1	1	1	1	0	1	0	1	1	1
0	1	0	1	1	1	1	1	0	1	0	0	0	1
0	1	0	1	1	1	1	1	0	1	1	0	1	1
0	1	0	1	1	1	1	1	0	1	1	1	0	1
0	1	0	1	1	1	1	1	0	1	1	1	1	1
0	1	0	1	1	1	1	1	1	0	1	0	0	1
0	1	0	1	1	1	1	1	1	0	0	0	1	1
0	1	0	1	1	1	1	1	1	0	0	1	0	1
0	1	0	1	1	1	1	1	1	0	0	1	1	1
0	1	0	1	1	1	1	1	1	0	0	0	0	1
0	1	0	1	1	1	1	1	1	0	1	0	1	1
0	1	0	1	1	1	1	1	1	0	1	1	0	1
0	1	0	1	1	1	1	1	1	0	1	1	1	1
0	1	0	1	1	1	1	1	1	1	1	0	0	1
0	1	0	1	1	1	1	1	1	1	0	0	1	1
0	1	0	1	1	1	1	1	1	1	0	1	0	1
0	1	0	1	1	1	1	1	1	1	0	1	1	1
0	1	0	1	1	1	1	1	1	1	0	0	0	1
0	1	0	1	1	1	1	1	1	1	1	0	1	1
0	1	0	1	1	1	1	1	1	1	1	1	0	1
0	1	0	1	1	1	1	1	1	1	1	1	1	1
0	1	1	0	0	0	0	0	0	0	0	0	0	1
0	1	1	0	0	0	0	0	0	0	0	0	1	1
0	1	1	0	0	0	0	0	0	0	0	1	0	1
0	1	1	0	0	0	0	0	0	0	0	1	1	1
0	1	1	0	0	0	0	0	0	0	1	0	0	1
0	1	1	0	0	0	0	0	0	0	1	0	1	1
0	1	1	0	0	0	0	0	0	0	1	1	0	1
0	1	1	0	0	0	0	0	0	0	1	1	1	1
0	1	1	0	0	0	0	0	0	1	0	0	0	1
0	1	1	0	0	0	0	0	0	1	0	0	1	1
0	1	1	0	0	0	0	0	0	1	0	1	0	1
0	1	1	0	0	0	0	0	0	1	0	1	1	1
0	1	1	0	0	0	0	0	0	1	1	0	0	1
0	1	1	0	0	0	0	0	0	1	1	0	1	1
0	1	1	0	0	0	0	0	0	1	1	1	0	1
0	1	1	0	0	0	0	0	0	1	1	1	1	1
0	1	1	0	0	0	0	0	1	0	0	0	0	1
0	1	1	0	0	0	0	0	1	0	0	0	1	1
0	1	1	0	0	0	0	0	1	0	0	1	0	1
0	1	1	0	0	0	0	0	1	0	0	1	1	1
0	1	1	0	0	0	0	0	1	0	1	0	0	1
0	1	1	0	0	0	0	0	1	0	1	0	1	1
0	1	1	0	0	0	0	0	1	0	1	1	0	1

0	1	1	0	0	0	0	0	1	0	1	1	1	1
0	1	1	0	0	0	0	0	1	1	0	0	0	1
0	1	1	0	0	0	0	0	1	1	0	0	1	1
0	1	1	0	0	0	0	0	1	1	0	1	0	1
0	1	1	0	0	0	0	0	1	1	0	1	1	1
0	1	1	0	0	0	0	0	1	1	1	0	0	1
0	1	1	0	0	0	0	0	1	1	1	0	1	1
0	1	1	0	0	0	0	0	1	1	1	1	0	1
0	1	1	0	0	0	0	0	1	1	1	1	1	1
0	1	1	0	0	0	0	1	0	0	0	0	0	1
0	1	1	0	0	0	0	1	0	0	0	0	1	1
0	1	1	0	0	0	0	1	0	0	0	1	0	1
0	1	1	0	0	0	0	1	0	0	0	1	1	1
0	1	1	0	0	0	0	1	0	0	1	0	0	1
0	1	1	0	0	0	0	1	0	0	1	0	1	1
0	1	1	0	0	0	0	1	0	0	1	1	0	1
0	1	1	0	0	0	0	1	0	0	1	1	1	1
0	1	1	0	0	0	0	1	0	1	0	0	0	1
0	1	1	0	0	0	0	1	0	1	0	0	1	1
0	1	1	0	0	0	0	1	0	1	0	1	0	1
0	1	1	0	0	0	0	1	0	1	0	1	1	1
0	1	1	0	0	0	0	1	0	1	1	0	0	1
0	1	1	0	0	0	0	1	0	1	1	0	1	1
0	1	1	0	0	0	0	1	0	1	1	1	0	1
0	1	1	0	0	0	0	1	0	1	1	1	1	1
0	1	1	0	0	0	0	1	1	0	0	0	0	1
0	1	1	0	0	0	0	1	1	0	0	0	1	1
0	1	1	0	0	0	0	1	1	0	0	1	0	1
0	1	1	0	0	0	0	1	1	0	0	1	1	1
0	1	1	0	0	0	0	1	1	0	1	0	0	1
0	1	1	0	0	0	0	1	1	0	1	0	1	1
0	1	1	0	0	0	0	1	1	0	1	1	0	1
0	1	1	0	0	0	0	1	1	0	1	1	1	1
0	1	1	0	0	0	0	1	1	1	0	0	0	1
0	1	1	0	0	0	0	1	1	1	0	0	1	1
0	1	1	0	0	0	0	1	1	1	0	1	0	1
0	1	1	0	0	0	0	1	1	1	0	1	1	1
0	1	1	0	0	0	0	1	1	1	1	0	0	1
0	1	1	0	0	0	0	1	1	1	1	0	1	1
0	1	1	0	0	0	0	1	1	1	1	1	0	1
0	1	1	0	0	0	0	1	1	1	1	1	1	1
0	1	1	0	0	0	1	0	0	0	0	0	0	1
0	1	1	0	0	0	1	0	0	0	0	0	1	1
0	1	1	0	0	0	1	0	0	0	0	1	0	1
0	1	1	0	0	0	1	0	0	0	0	1	1	1
0	1	1	0	0	0	1	0	0	0	1	0	0	1

0	1	1	0	0	0	1	0	0	0	1	0	1	1
0	1	1	0	0	0	1	0	0	0	1	1	0	1
0	1	1	0	0	0	1	0	0	0	1	1	1	1
0	1	1	0	0	0	1	0	0	1	0	0	0	1
0	1	1	0	0	0	1	0	0	1	0	0	1	1
0	1	1	0	0	0	1	0	0	1	0	1	0	1
0	1	1	0	0	0	1	0	0	1	0	1	1	1
0	1	1	0	0	0	1	0	0	1	1	0	0	1
0	1	1	0	0	0	1	0	0	1	1	0	1	1
0	1	1	0	0	0	1	0	0	1	1	1	0	1
0	1	1	0	0	0	1	0	0	1	1	1	1	1
0	1	1	0	0	0	1	0	1	0	0	0	0	1
0	1	1	0	0	0	1	0	1	0	0	0	1	1
0	1	1	0	0	0	1	0	1	0	0	1	0	1
0	1	1	0	0	0	1	0	1	0	0	1	1	1
0	1	1	0	0	0	1	0	1	0	1	0	0	1
0	1	1	0	0	0	1	0	1	0	1	0	1	1
0	1	1	0	0	0	1	0	1	0	1	1	0	1
0	1	1	0	0	0	1	0	1	0	1	1	1	1
0	1	1	0	0	0	1	0	1	1	0	0	0	1
0	1	1	0	0	0	1	0	1	1	0	0	1	1
0	1	1	0	0	0	1	0	1	1	0	1	0	1
0	1	1	0	0	0	1	0	1	1	0	1	1	1
0	1	1	0	0	0	1	0	1	1	1	0	0	1
0	1	1	0	0	0	1	0	1	1	1	0	1	1
0	1	1	0	0	0	1	0	1	1	1	1	0	1
0	1	1	0	0	0	1	0	1	1	1	1	1	1
0	1	1	0	0	0	1	1	0	0	0	0	0	1
0	1	1	0	0	0	1	1	0	0	0	0	1	1
0	1	1	0	0	0	1	1	0	0	0	1	0	1
0	1	1	0	0	0	1	1	0	0	0	1	1	1
0	1	1	0	0	0	1	1	0	0	1	0	0	1
0	1	1	0	0	0	1	1	0	0	1	0	1	1
0	1	1	0	0	0	1	1	0	0	1	1	0	1
0	1	1	0	0	0	1	1	0	0	1	1	1	1
0	1	1	0	0	0	1	1	0	1	0	0	0	1
0	1	1	0	0	0	1	1	0	1	0	0	1	1
0	1	1	0	0	0	1	1	0	1	0	1	0	1
0	1	1	0	0	0	1	1	0	1	0	1	1	1
0	1	1	0	0	0	1	1	0	1	1	0	0	1
0	1	1	0	0	0	1	1	0	1	1	0	1	1
0	1	1	0	0	0	1	1	0	1	1	1	0	1
0	1	1	0	0	0	1	1	0	1	1	1	1	1
0	1	1	0	0	0	1	1	1	0	0	0	0	1
0	1	1	0	0	0	1	1	1	0	0	0	1	1
0	1	1	0	0	0	1	1	1	0	0	1	0	1

0	1	1	0	0	0	1	1	1	0	0	1	1	1
0	1	1	0	0	0	1	1	1	0	1	0	0	1
0	1	1	0	0	0	1	1	1	0	1	0	1	1
0	1	1	0	0	0	1	1	1	0	1	1	0	1
0	1	1	0	0	0	1	1	1	0	1	1	1	1
0	1	1	0	0	0	1	1	1	1	0	0	0	1
0	1	1	0	0	0	1	1	1	1	0	0	1	1
0	1	1	0	0	0	1	1	1	1	0	1	0	1
0	1	1	0	0	0	1	1	1	1	0	1	1	1
0	1	1	0	0	0	1	1	1	1	1	0	0	1
0	1	1	0	0	0	1	1	1	1	1	0	1	1
0	1	1	0	0	0	1	1	1	1	1	1	0	1
0	1	1	0	0	0	1	1	1	1	1	1	1	1
0	1	1	0	0	1	0	0	0	0	0	0	0	1
0	1	1	0	0	1	0	0	0	0	0	0	1	1
0	1	1	0	0	1	0	0	0	0	0	1	0	1
0	1	1	0	0	1	0	0	0	0	0	1	1	1
0	1	1	0	0	1	0	0	0	0	1	0	0	1
0	1	1	0	0	1	0	0	0	0	1	0	1	1
0	1	1	0	0	1	0	0	0	0	1	1	0	1
0	1	1	0	0	1	0	0	0	0	1	1	1	1
0	1	1	0	0	1	0	0	0	1	0	0	0	1
0	1	1	0	0	1	0	0	0	1	0	0	1	1
0	1	1	0	0	1	0	0	0	1	0	1	0	1
0	1	1	0	0	1	0	0	0	1	0	1	1	1
0	1	1	0	0	1	0	0	0	1	1	0	0	1
0	1	1	0	0	1	0	0	0	1	1	0	1	1
0	1	1	0	0	1	0	0	0	1	1	1	0	1
0	1	1	0	0	1	0	0	0	1	1	1	1	1
0	1	1	0	0	1	0	0	1	0	0	0	0	1
0	1	1	0	0	1	0	0	1	0	0	0	1	1
0	1	1	0	0	1	0	0	1	0	0	1	0	1
0	1	1	0	0	1	0	0	1	0	0	1	1	1
0	1	1	0	0	1	0	0	1	0	1	0	0	1
0	1	1	0	0	1	0	0	1	0	1	0	1	1
0	1	1	0	0	1	0	0	1	0	1	1	0	1
0	1	1	0	0	1	0	0	1	0	1	1	1	1
0	1	1	0	0	1	0	0	1	1	0	0	0	1
0	1	1	0	0	1	0	0	1	1	0	0	1	1
0	1	1	0	0	1	0	0	1	1	0	1	0	1
0	1	1	0	0	1	0	0	1	1	0	1	1	1
0	1	1	0	0	1	0	0	1	1	1	0	0	1
0	1	1	0	0	1	0	0	1	1	1	0	1	1
0	1	1	0	0	1	0	0	1	1	1	1	0	1
0	1	1	0	0	1	0	0	1	1	1	1	1	1
0	1	1	0	0	1	0	1	0	0	0	0	0	1

0	1	1	0	0	1	0	1	0	0	0	0	1	1
0	1	1	0	0	1	0	1	0	0	0	1	0	1
0	1	1	0	0	1	0	1	0	0	0	1	1	1
0	1	1	0	0	1	0	1	0	0	1	0	0	1
0	1	1	0	0	1	0	1	0	0	1	0	1	1
0	1	1	0	0	1	0	1	0	0	1	1	0	1
0	1	1	0	0	1	0	1	0	0	1	1	1	1
0	1	1	0	0	1	0	1	0	1	0	0	0	1
0	1	1	0	0	1	0	1	0	1	0	0	1	1
0	1	1	0	0	1	0	1	0	1	0	1	0	1
0	1	1	0	0	1	0	1	0	1	0	1	1	1
0	1	1	0	0	1	0	1	0	1	1	0	0	1
0	1	1	0	0	1	0	1	0	1	1	0	1	1
0	1	1	0	0	1	0	1	0	1	1	1	0	1
0	1	1	0	0	1	0	1	0	1	1	1	1	1
0	1	1	0	0	1	0	1	1	0	0	0	0	1
0	1	1	0	0	1	0	1	1	0	0	0	1	1
0	1	1	0	0	1	0	1	1	0	0	1	0	1
0	1	1	0	0	1	0	1	1	0	0	1	1	1
0	1	1	0	0	1	0	1	1	0	1	0	0	1
0	1	1	0	0	1	0	1	1	0	1	0	1	1
0	1	1	0	0	1	0	1	1	0	1	1	0	1
0	1	1	0	0	1	0	1	1	0	1	1	1	1
0	1	1	0	0	1	0	1	1	1	0	0	0	1
0	1	1	0	0	1	0	1	1	1	0	0	1	1
0	1	1	0	0	1	0	1	1	1	0	1	0	1
0	1	1	0	0	1	0	1	1	1	0	1	1	1
0	1	1	0	0	1	0	1	1	1	1	0	0	1
0	1	1	0	0	1	0	1	1	1	1	0	1	1
0	1	1	0	0	1	0	1	1	1	1	1	0	1
0	1	1	0	0	1	0	1	1	1	1	1	1	1
0	1	1	0	0	1	1	0	0	0	0	0	0	1
0	1	1	0	0	1	1	0	0	0	0	0	1	1
0	1	1	0	0	1	1	0	0	0	0	1	0	1
0	1	1	0	0	1	1	0	0	0	0	1	1	1
0	1	1	0	0	1	1	0	0	0	1	0	0	1
0	1	1	0	0	1	1	0	0	0	1	0	1	1
0	1	1	0	0	1	1	0	0	0	1	1	0	1
0	1	1	0	0	1	1	0	0	0	1	1	1	1
0	1	1	0	0	1	1	0	0	1	0	0	0	1
0	1	1	0	0	1	1	0	0	1	0	0	1	1
0	1	1	0	0	1	1	0	0	1	0	1	0	1
0	1	1	0	0	1	1	0	0	1	0	1	1	1
0	1	1	0	0	1	1	0	0	1	1	0	0	1
0	1	1	0	0	1	1	0	0	1	1	0	1	1
0	1	1	0	0	1	1	0	0	1	1	1	0	1

0	1	1	0	0	1	1	0	0	1	1	1	1	1
0	1	1	0	0	1	1	0	1	0	0	0	0	1
0	1	1	0	0	1	1	0	1	0	0	0	1	1
0	1	1	0	0	1	1	0	1	0	0	1	0	1
0	1	1	0	0	1	1	0	1	0	0	1	1	1
0	1	1	0	0	1	1	0	1	0	1	0	0	1
0	1	1	0	0	1	1	0	1	0	1	0	1	1
0	1	1	0	0	1	1	0	1	0	1	1	0	1
0	1	1	0	0	1	1	0	1	0	1	1	1	1
0	1	1	0	0	1	1	0	1	1	0	0	0	1
0	1	1	0	0	1	1	0	1	1	0	0	1	1
0	1	1	0	0	1	1	0	1	1	0	1	0	1
0	1	1	0	0	1	1	0	1	1	0	1	1	1
0	1	1	0	0	1	1	0	1	1	1	0	0	1
0	1	1	0	0	1	1	0	1	1	1	0	1	1
0	1	1	0	0	1	1	0	1	1	1	1	0	1
0	1	1	0	0	1	1	0	1	1	1	1	1	1
0	1	1	0	0	1	1	1	0	0	1	0	0	1
0	1	1	0	0	1	1	1	0	0	0	0	1	1
0	1	1	0	0	1	1	1	0	0	0	1	0	1
0	1	1	0	0	1	1	1	0	0	0	1	1	1
0	1	1	0	0	1	1	1	0	0	0	0	0	1
0	1	1	0	0	1	1	1	0	0	1	0	1	1
0	1	1	0	0	1	1	1	0	0	1	1	0	1
0	1	1	0	0	1	1	1	0	0	1	1	1	1
0	1	1	0	0	1	1	1	0	1	1	0	0	1
0	1	1	0	0	1	1	1	0	1	0	0	1	1
0	1	1	0	0	1	1	1	0	1	0	1	0	1
0	1	1	0	0	1	1	1	0	1	0	1	1	1
0	1	1	0	0	1	1	1	0	1	0	0	0	1
0	1	1	0	0	1	1	1	0	1	1	0	1	1
0	1	1	0	0	1	1	1	0	1	1	1	0	1
0	1	1	0	0	1	1	1	0	1	1	1	1	1
0	1	1	0	0	1	1	1	1	0	1	0	0	1
0	1	1	0	0	1	1	1	1	0	0	0	1	1
0	1	1	0	0	1	1	1	1	0	0	1	0	1
0	1	1	0	0	1	1	1	1	0	0	1	1	1
0	1	1	0	0	1	1	1	1	0	0	0	0	1
0	1	1	0	0	1	1	1	1	0	1	0	1	1
0	1	1	0	0	1	1	1	1	0	1	1	0	1
0	1	1	0	0	1	1	1	1	0	1	1	1	1
0	1	1	0	0	1	1	1	1	1	1	0	0	1
0	1	1	0	0	1	1	1	1	1	0	0	1	1
0	1	1	0	0	1	1	1	1	1	0	1	0	1
0	1	1	0	0	1	1	1	1	1	0	1	1	1
0	1	1	0	0	1	1	1	1	1	0	0	0	1

0	1	1	0	0	1	1	1	1	1	1	0	1	1
0	1	1	0	0	1	1	1	1	1	1	1	0	1
0	1	1	0	0	1	1	1	1	1	1	1	1	1
0	1	1	0	1	0	0	0	0	0	0	0	0	1
0	1	1	0	1	0	0	0	0	0	0	0	1	1
0	1	1	0	1	0	0	0	0	0	0	1	0	1
0	1	1	0	1	0	0	0	0	0	0	1	1	1
0	1	1	0	1	0	0	0	0	0	1	0	0	1
0	1	1	0	1	0	0	0	0	0	1	0	1	1
0	1	1	0	1	0	0	0	0	0	1	1	0	1
0	1	1	0	1	0	0	0	0	0	1	1	1	1
0	1	1	0	1	0	0	0	0	1	0	0	0	1
0	1	1	0	1	0	0	0	0	1	0	0	1	1
0	1	1	0	1	0	0	0	0	1	0	1	0	1
0	1	1	0	1	0	0	0	0	1	0	1	1	1
0	1	1	0	1	0	0	0	0	1	1	0	0	1
0	1	1	0	1	0	0	0	0	1	1	0	1	1
0	1	1	0	1	0	0	0	0	1	1	1	0	1
0	1	1	0	1	0	0	0	0	1	1	1	1	1
0	1	1	0	1	0	0	0	1	0	0	0	0	1
0	1	1	0	1	0	0	0	1	0	0	0	1	1
0	1	1	0	1	0	0	0	1	0	0	1	0	1
0	1	1	0	1	0	0	0	1	0	0	1	1	1
0	1	1	0	1	0	0	0	1	0	1	0	0	1
0	1	1	0	1	0	0	0	1	0	1	0	1	1
0	1	1	0	1	0	0	0	1	0	1	1	0	1
0	1	1	0	1	0	0	0	1	0	1	1	1	1
0	1	1	0	1	0	0	0	1	1	0	0	0	1
0	1	1	0	1	0	0	0	1	1	0	0	1	1
0	1	1	0	1	0	0	0	1	1	0	1	0	1
0	1	1	0	1	0	0	0	1	1	0	1	1	1
0	1	1	0	1	0	0	0	1	1	1	0	0	1
0	1	1	0	1	0	0	0	1	1	1	0	1	1
0	1	1	0	1	0	0	0	1	1	1	1	0	1
0	1	1	0	1	0	0	0	1	1	1	1	1	1
0	1	1	0	1	0	0	1	0	0	0	0	0	1
0	1	1	0	1	0	0	1	0	0	0	0	1	1
0	1	1	0	1	0	0	1	0	0	0	1	0	1
0	1	1	0	1	0	0	1	0	0	0	1	1	1
0	1	1	0	1	0	0	1	0	0	1	0	0	1
0	1	1	0	1	0	0	1	0	0	1	0	1	1
0	1	1	0	1	0	0	1	0	0	1	1	0	1
0	1	1	0	1	0	0	1	0	0	1	1	1	1
0	1	1	0	1	0	0	1	0	1	0	0	0	1
0	1	1	0	1	0	0	1	0	1	0	0	1	1
0	1	1	0	1	0	0	1	0	1	0	1	0	1

0	1	1	0	1	0	0	1	0	1	0	1	1	1
0	1	1	0	1	0	0	1	0	1	1	0	0	1
0	1	1	0	1	0	0	1	0	1	1	0	1	1
0	1	1	0	1	0	0	1	0	1	1	1	0	1
0	1	1	0	1	0	0	1	0	1	1	1	1	1
0	1	1	0	1	0	0	1	1	0	0	0	0	1
0	1	1	0	1	0	0	1	1	0	0	0	1	1
0	1	1	0	1	0	0	1	1	0	0	1	0	1
0	1	1	0	1	0	0	1	1	0	0	1	1	1
0	1	1	0	1	0	0	1	1	0	1	0	0	1
0	1	1	0	1	0	0	1	1	0	1	0	1	1
0	1	1	0	1	0	0	1	1	0	1	1	0	1
0	1	1	0	1	0	0	1	1	0	1	1	1	1
0	1	1	0	1	0	0	1	1	1	0	0	0	1
0	1	1	0	1	0	0	1	1	1	0	0	1	1
0	1	1	0	1	0	0	1	1	1	0	1	0	1
0	1	1	0	1	0	0	1	1	1	0	1	1	1
0	1	1	0	1	0	0	1	1	1	1	0	0	1
0	1	1	0	1	0	0	1	1	1	1	0	1	1
0	1	1	0	1	0	0	1	1	1	1	1	0	1
0	1	1	0	1	0	0	1	1	1	1	1	1	1
0	1	1	0	1	0	1	0	0	0	0	0	0	1
0	1	1	0	1	0	1	0	0	0	0	0	1	1
0	1	1	0	1	0	1	0	0	0	0	1	0	1
0	1	1	0	1	0	1	0	0	0	0	1	1	1
0	1	1	0	1	0	1	0	0	0	1	0	0	1
0	1	1	0	1	0	1	0	0	0	1	0	1	1
0	1	1	0	1	0	1	0	0	0	1	1	0	1
0	1	1	0	1	0	1	0	0	0	1	1	1	1
0	1	1	0	1	0	1	0	0	1	0	0	0	1
0	1	1	0	1	0	1	0	0	1	0	0	1	1
0	1	1	0	1	0	1	0	0	1	0	1	0	1
0	1	1	0	1	0	1	0	0	1	0	1	1	1
0	1	1	0	1	0	1	0	0	1	1	0	0	1
0	1	1	0	1	0	1	0	0	1	1	0	1	1
0	1	1	0	1	0	1	0	0	1	1	1	0	1
0	1	1	0	1	0	1	0	0	1	1	1	1	1
0	1	1	0	1	0	1	0	1	0	0	0	0	1
0	1	1	0	1	0	1	0	1	0	0	0	1	1
0	1	1	0	1	0	1	0	1	0	0	1	0	1
0	1	1	0	1	0	1	0	1	0	0	1	1	1
0	1	1	0	1	0	1	0	1	0	1	0	0	1
0	1	1	0	1	0	1	0	1	0	1	0	1	1
0	1	1	0	1	0	1	0	1	0	1	1	0	1
0	1	1	0	1	0	1	0	1	0	1	1	1	1
0	1	1	0	1	0	1	0	1	1	0	0	0	1

0	1	1	0	1	0	1	0	1	1	0	0	1	1
0	1	1	0	1	0	1	0	1	1	0	1	0	1
0	1	1	0	1	0	1	0	1	1	0	1	1	1
0	1	1	0	1	0	1	0	1	1	1	0	0	1
0	1	1	0	1	0	1	0	1	1	1	0	1	1
0	1	1	0	1	0	1	0	1	1	1	1	0	1
0	1	1	0	1	0	1	0	1	1	1	1	1	1
0	1	1	0	1	0	1	1	0	0	0	0	0	1
0	1	1	0	1	0	1	1	0	0	0	0	1	1
0	1	1	0	1	0	1	1	0	0	0	1	0	1
0	1	1	0	1	0	1	1	0	0	0	1	1	1
0	1	1	0	1	0	1	1	0	0	1	0	0	1
0	1	1	0	1	0	1	1	0	0	1	0	1	1
0	1	1	0	1	0	1	1	0	0	1	1	0	1
0	1	1	0	1	0	1	1	0	0	1	1	1	1
0	1	1	0	1	0	1	1	0	1	0	0	0	1
0	1	1	0	1	0	1	1	0	1	0	0	1	1
0	1	1	0	1	0	1	1	0	1	0	1	0	1
0	1	1	0	1	0	1	1	0	1	0	1	1	1
0	1	1	0	1	0	1	1	0	1	1	0	0	1
0	1	1	0	1	0	1	1	0	1	1	0	1	1
0	1	1	0	1	0	1	1	0	1	1	1	0	1
0	1	1	0	1	0	1	1	0	1	1	1	1	1
0	1	1	0	1	0	1	1	1	0	0	0	0	1
0	1	1	0	1	0	1	1	1	0	0	0	1	1
0	1	1	0	1	0	1	1	1	0	0	1	0	1
0	1	1	0	1	0	1	1	1	0	0	1	1	1
0	1	1	0	1	0	1	1	1	0	1	0	0	1
0	1	1	0	1	0	1	1	1	0	1	0	1	1
0	1	1	0	1	0	1	1	1	0	1	1	0	1
0	1	1	0	1	0	1	1	1	0	1	1	1	1
0	1	1	0	1	0	1	1	1	1	0	0	0	1
0	1	1	0	1	0	1	1	1	1	0	0	1	1
0	1	1	0	1	0	1	1	1	1	0	1	0	1
0	1	1	0	1	0	1	1	1	1	0	1	1	1
0	1	1	0	1	0	1	1	1	1	1	0	0	1
0	1	1	0	1	0	1	1	1	1	1	0	1	1
0	1	1	0	1	0	1	1	1	1	1	1	0	1
0	1	1	0	1	0	1	1	1	1	1	1	1	1
0	1	1	0	1	1	0	0	0	0	0	0	0	1
0	1	1	0	1	1	0	0	0	0	0	0	1	1
0	1	1	0	1	1	0	0	0	0	0	1	0	1
0	1	1	0	1	1	0	0	0	0	0	1	1	1
0	1	1	0	1	1	0	0	0	0	1	0	0	1
0	1	1	0	1	1	0	0	0	0	1	0	1	1
0	1	1	0	1	1	0	0	0	0	1	1	0	1

0	1	1	0	1	1	0	0	0	0	1	1	1	1
0	1	1	0	1	1	0	0	0	1	0	0	0	1
0	1	1	0	1	1	0	0	0	1	0	0	1	1
0	1	1	0	1	1	0	0	0	1	0	1	0	1
0	1	1	0	1	1	0	0	0	1	0	1	1	1
0	1	1	0	1	1	0	0	0	1	1	0	0	1
0	1	1	0	1	1	0	0	0	1	1	0	1	1
0	1	1	0	1	1	0	0	0	1	1	1	0	1
0	1	1	0	1	1	0	0	0	1	1	1	1	1
0	1	1	0	1	1	0	0	1	0	0	0	0	1
0	1	1	0	1	1	0	0	1	0	0	0	1	1
0	1	1	0	1	1	0	0	1	0	0	1	0	1
0	1	1	0	1	1	0	0	1	0	0	1	1	1
0	1	1	0	1	1	0	0	1	0	1	0	0	1
0	1	1	0	1	1	0	0	1	0	1	0	1	1
0	1	1	0	1	1	0	0	1	0	1	1	0	1
0	1	1	0	1	1	0	0	1	0	1	1	1	1
0	1	1	0	1	1	0	0	1	1	0	0	0	1
0	1	1	0	1	1	0	0	1	1	0	0	1	1
0	1	1	0	1	1	0	0	1	1	0	1	0	1
0	1	1	0	1	1	0	0	1	1	0	1	1	1
0	1	1	0	1	1	0	0	1	1	1	0	0	1
0	1	1	0	1	1	0	0	1	1	1	0	1	1
0	1	1	0	1	1	0	0	1	1	1	1	0	1
0	1	1	0	1	1	0	0	1	1	1	1	1	1
0	1	1	0	1	1	0	1	0	0	0	0	0	1
0	1	1	0	1	1	0	1	0	0	0	0	1	1
0	1	1	0	1	1	0	1	0	0	0	1	0	1
0	1	1	0	1	1	0	1	0	0	0	1	1	1
0	1	1	0	1	1	0	1	0	0	1	0	0	1
0	1	1	0	1	1	0	1	0	0	1	0	1	1
0	1	1	0	1	1	0	1	0	0	1	1	0	1
0	1	1	0	1	1	0	1	0	0	1	1	1	1
0	1	1	0	1	1	0	1	0	1	0	0	0	1
0	1	1	0	1	1	0	1	0	1	0	0	1	1
0	1	1	0	1	1	0	1	0	1	0	1	0	1
0	1	1	0	1	1	0	1	0	1	0	1	1	1
0	1	1	0	1	1	0	1	0	1	1	0	0	1
0	1	1	0	1	1	0	1	0	1	1	0	1	1
0	1	1	0	1	1	0	1	0	1	1	1	0	1
0	1	1	0	1	1	0	1	0	1	1	1	1	1
0	1	1	0	1	1	0	1	1	0	0	0	0	1
0	1	1	0	1	1	0	1	1	0	0	0	1	1
0	1	1	0	1	1	0	1	1	0	0	1	0	1
0	1	1	0	1	1	0	1	1	0	0	1	1	1
0	1	1	0	1	1	0	1	1	0	1	0	0	1

0	1	1	0	1	1	0	1	1	0	1	0	1	1
0	1	1	0	1	1	0	1	1	0	1	1	0	1
0	1	1	0	1	1	0	1	1	0	1	1	1	1
0	1	1	0	1	1	0	1	1	1	0	0	0	1
0	1	1	0	1	1	0	1	1	1	0	0	1	1
0	1	1	0	1	1	0	1	1	1	0	1	0	1
0	1	1	0	1	1	0	1	1	1	0	1	1	1
0	1	1	0	1	1	0	1	1	1	1	0	0	1
0	1	1	0	1	1	0	1	1	1	1	0	1	1
0	1	1	0	1	1	0	1	1	1	1	1	0	1
0	1	1	0	1	1	0	1	1	1	1	1	1	1
0	1	1	0	1	1	1	0	0	0	0	0	0	1
0	1	1	0	1	1	1	0	0	0	0	0	1	1
0	1	1	0	1	1	1	0	0	0	0	1	0	1
0	1	1	0	1	1	1	0	0	0	0	1	1	1
0	1	1	0	1	1	1	0	0	0	1	0	0	1
0	1	1	0	1	1	1	0	0	0	1	0	1	1
0	1	1	0	1	1	1	0	0	0	1	1	0	1
0	1	1	0	1	1	1	0	0	0	1	1	1	1
0	1	1	0	1	1	1	0	0	1	0	0	0	1
0	1	1	0	1	1	1	0	0	1	0	0	1	1
0	1	1	0	1	1	1	0	0	1	0	1	0	1
0	1	1	0	1	1	1	0	0	1	0	1	1	1
0	1	1	0	1	1	1	0	0	1	1	0	0	1
0	1	1	0	1	1	1	0	0	1	1	0	1	1
0	1	1	0	1	1	1	0	0	1	1	1	0	1
0	1	1	0	1	1	1	0	0	1	1	1	1	1
0	1	1	0	1	1	1	0	1	0	0	0	0	1
0	1	1	0	1	1	1	0	1	0	0	0	1	1
0	1	1	0	1	1	1	0	1	0	0	1	0	1
0	1	1	0	1	1	1	0	1	0	0	1	1	1
0	1	1	0	1	1	1	0	1	0	1	0	0	1
0	1	1	0	1	1	1	0	1	0	1	0	1	1
0	1	1	0	1	1	1	0	1	0	1	1	0	1
0	1	1	0	1	1	1	0	1	0	1	1	1	1
0	1	1	0	1	1	1	0	1	1	0	0	0	1
0	1	1	0	1	1	1	0	1	1	0	0	1	1
0	1	1	0	1	1	1	0	1	1	0	1	0	1
0	1	1	0	1	1	1	0	1	1	0	1	1	1
0	1	1	0	1	1	1	0	1	1	1	0	0	1
0	1	1	0	1	1	1	0	1	1	1	0	1	1
0	1	1	0	1	1	1	0	1	1	1	1	0	1
0	1	1	0	1	1	1	0	1	1	1	1	1	1
0	1	1	0	1	1	1	1	0	0	1	0	0	1
0	1	1	0	1	1	1	1	0	0	0	0	1	1
0	1	1	0	1	1	1	1	0	0	0	1	0	1

0	1	1	0	1	1	1	1	0	0	0	1	1	1
0	1	1	0	1	1	1	1	0	0	0	0	0	1
0	1	1	0	1	1	1	1	0	0	1	0	1	1
0	1	1	0	1	1	1	1	0	0	1	1	0	1
0	1	1	0	1	1	1	1	0	0	1	1	1	1
0	1	1	0	1	1	1	1	0	1	1	0	0	1
0	1	1	0	1	1	1	1	0	1	0	0	1	1
0	1	1	0	1	1	1	1	0	1	0	1	0	1
0	1	1	0	1	1	1	1	0	1	0	1	1	1
0	1	1	0	1	1	1	1	0	1	0	0	0	1
0	1	1	0	1	1	1	1	0	1	1	0	1	1
0	1	1	0	1	1	1	1	0	1	1	1	0	1
0	1	1	0	1	1	1	1	0	1	1	1	1	1
0	1	1	0	1	1	1	1	1	0	1	0	0	1
0	1	1	0	1	1	1	1	1	0	0	0	1	1
0	1	1	0	1	1	1	1	1	0	0	1	0	1
0	1	1	0	1	1	1	1	1	0	0	1	1	1
0	1	1	0	1	1	1	1	1	0	0	0	0	1
0	1	1	0	1	1	1	1	1	0	1	0	1	1
0	1	1	0	1	1	1	1	1	0	1	1	0	1
0	1	1	0	1	1	1	1	1	0	1	1	1	1
0	1	1	0	1	1	1	1	1	1	1	0	0	1
0	1	1	0	1	1	1	1	1	1	0	0	1	1
0	1	1	0	1	1	1	1	1	1	0	1	0	1
0	1	1	0	1	1	1	1	1	1	0	1	1	1
0	1	1	0	1	1	1	1	1	1	0	0	0	1
0	1	1	0	1	1	1	1	1	1	1	0	1	1
0	1	1	0	1	1	1	1	1	1	1	1	0	1
0	1	1	0	1	1	1	1	1	1	1	1	1	1
0	1	1	1	0	0	0	0	0	0	0	0	0	1
0	1	1	1	0	0	0	0	0	0	0	0	1	1
0	1	1	1	0	0	0	0	0	0	0	1	0	1
0	1	1	1	0	0	0	0	0	0	0	1	1	1
0	1	1	1	0	0	0	0	0	0	1	0	0	1
0	1	1	1	0	0	0	0	0	0	1	0	1	1
0	1	1	1	0	0	0	0	0	0	1	1	0	1
0	1	1	1	0	0	0	0	0	0	1	1	1	1
0	1	1	1	0	0	0	0	0	1	0	0	0	1
0	1	1	1	0	0	0	0	0	1	0	0	1	1
0	1	1	1	0	0	0	0	0	1	0	1	0	1
0	1	1	1	0	0	0	0	0	1	0	1	1	1
0	1	1	1	0	0	0	0	0	1	1	0	0	1
0	1	1	1	0	0	0	0	0	1	1	0	1	1
0	1	1	1	0	0	0	0	0	1	1	1	0	1
0	1	1	1	0	0	0	0	0	1	1	1	1	1
0	1	1	1	0	0	0	0	1	0	0	0	0	1

0	1	1	1	0	0	0	0	1	0	0	0	1	1
0	1	1	1	0	0	0	0	1	0	0	1	0	1
0	1	1	1	0	0	0	0	1	0	0	1	1	1
0	1	1	1	0	0	0	0	1	0	1	0	0	1
0	1	1	1	0	0	0	0	1	0	1	0	1	1
0	1	1	1	0	0	0	0	1	0	1	1	0	1
0	1	1	1	0	0	0	0	1	0	1	1	1	1
0	1	1	1	0	0	0	0	1	1	0	0	0	1
0	1	1	1	0	0	0	0	1	1	0	0	1	1
0	1	1	1	0	0	0	0	1	1	0	1	0	1
0	1	1	1	0	0	0	0	1	1	0	1	1	1
0	1	1	1	0	0	0	0	1	1	1	0	0	1
0	1	1	1	0	0	0	0	1	1	1	0	1	1
0	1	1	1	0	0	0	0	1	1	1	1	0	1
0	1	1	1	0	0	0	0	1	1	1	1	1	1
0	1	1	1	0	0	0	1	0	0	0	0	0	1
0	1	1	1	0	0	0	1	0	0	0	0	1	1
0	1	1	1	0	0	0	1	0	0	0	1	0	1
0	1	1	1	0	0	0	1	0	0	0	1	1	1
0	1	1	1	0	0	0	1	0	0	1	0	0	1
0	1	1	1	0	0	0	1	0	0	1	0	1	1
0	1	1	1	0	0	0	1	0	0	1	1	0	1
0	1	1	1	0	0	0	1	0	0	1	1	1	1
0	1	1	1	0	0	0	1	0	1	0	0	0	1
0	1	1	1	0	0	0	1	0	1	0	0	1	1
0	1	1	1	0	0	0	1	0	1	0	1	0	1
0	1	1	1	0	0	0	1	0	1	0	1	1	1
0	1	1	1	0	0	0	1	0	1	1	0	0	1
0	1	1	1	0	0	0	1	0	1	1	0	1	1
0	1	1	1	0	0	0	1	0	1	1	1	0	1
0	1	1	1	0	0	0	1	0	1	1	1	1	1
0	1	1	1	0	0	0	1	1	0	0	0	0	1
0	1	1	1	0	0	0	1	1	0	0	0	1	1
0	1	1	1	0	0	0	1	1	0	0	1	0	1
0	1	1	1	0	0	0	1	1	0	0	1	1	1
0	1	1	1	0	0	0	1	1	0	1	0	0	1
0	1	1	1	0	0	0	1	1	0	1	0	1	1
0	1	1	1	0	0	0	1	1	0	1	1	0	1
0	1	1	1	0	0	0	1	1	0	1	1	1	1
0	1	1	1	0	0	0	1	1	1	0	0	0	1
0	1	1	1	0	0	0	1	1	1	0	0	1	1
0	1	1	1	0	0	0	1	1	1	0	1	0	1
0	1	1	1	0	0	0	1	1	1	0	1	1	1
0	1	1	1	0	0	0	1	1	1	1	0	0	1
0	1	1	1	0	0	0	1	1	1	1	0	1	1
0	1	1	1	0	0	0	1	1	1	1	1	0	1

0	1	1	1	0	0	0	1	1	1	1	1	1	1
0	1	1	1	0	0	1	0	0	0	0	0	0	1
0	1	1	1	0	0	1	0	0	0	0	0	1	1
0	1	1	1	0	0	1	0	0	0	0	1	0	1
0	1	1	1	0	0	1	0	0	0	0	1	1	1
0	1	1	1	0	0	1	0	0	0	1	0	0	1
0	1	1	1	0	0	1	0	0	0	1	0	1	1
0	1	1	1	0	0	1	0	0	0	1	1	0	1
0	1	1	1	0	0	1	0	0	0	1	1	1	1
0	1	1	1	0	0	1	0	0	1	0	0	0	1
0	1	1	1	0	0	1	0	0	1	0	0	1	1
0	1	1	1	0	0	1	0	0	1	0	1	0	1
0	1	1	1	0	0	1	0	0	1	0	1	1	1
0	1	1	1	0	0	1	0	0	1	1	0	0	1
0	1	1	1	0	0	1	0	0	1	1	0	1	1
0	1	1	1	0	0	1	0	0	1	1	1	0	1
0	1	1	1	0	0	1	0	0	1	1	1	1	1
0	1	1	1	0	0	1	0	1	0	0	0	0	1
0	1	1	1	0	0	1	0	1	0	0	0	1	1
0	1	1	1	0	0	1	0	1	0	0	1	0	1
0	1	1	1	0	0	1	0	1	0	0	1	1	1
0	1	1	1	0	0	1	0	1	0	1	0	0	1
0	1	1	1	0	0	1	0	1	0	1	0	1	1
0	1	1	1	0	0	1	0	1	0	1	1	0	1
0	1	1	1	0	0	1	0	1	0	1	1	1	1
0	1	1	1	0	0	1	0	1	1	0	0	0	1
0	1	1	1	0	0	1	0	1	1	0	0	1	1
0	1	1	1	0	0	1	0	1	1	0	1	0	1
0	1	1	1	0	0	1	0	1	1	0	1	1	1
0	1	1	1	0	0	1	0	1	1	1	0	0	1
0	1	1	1	0	0	1	0	1	1	1	0	1	1
0	1	1	1	0	0	1	0	1	1	1	1	0	1
0	1	1	1	0	0	1	0	1	1	1	1	1	1
0	1	1	1	0	0	1	1	0	0	0	0	0	1
0	1	1	1	0	0	1	1	0	0	0	0	1	1
0	1	1	1	0	0	1	1	0	0	0	1	0	1
0	1	1	1	0	0	1	1	0	0	0	1	1	1
0	1	1	1	0	0	1	1	0	0	1	0	0	1
0	1	1	1	0	0	1	1	0	0	1	0	1	1
0	1	1	1	0	0	1	1	0	0	1	1	0	1
0	1	1	1	0	0	1	1	0	0	1	1	1	1
0	1	1	1	0	0	1	1	0	1	0	0	0	1
0	1	1	1	0	0	1	1	0	1	0	0	1	1
0	1	1	1	0	0	1	1	0	1	0	1	0	1
0	1	1	1	0	0	1	1	0	1	0	1	1	1
0	1	1	1	0	0	1	1	0	1	1	0	0	1

0	1	1	1	0	0	1	1	0	1	1	0	1	1
0	1	1	1	0	0	1	1	0	1	1	1	0	1
0	1	1	1	0	0	1	1	0	1	1	1	1	1
0	1	1	1	0	0	1	1	1	0	0	0	0	1
0	1	1	1	0	0	1	1	1	0	0	0	1	1
0	1	1	1	0	0	1	1	1	0	0	1	0	1
0	1	1	1	0	0	1	1	1	0	0	1	1	1
0	1	1	1	0	0	1	1	1	0	1	0	0	1
0	1	1	1	0	0	1	1	1	0	1	0	1	1
0	1	1	1	0	0	1	1	1	0	1	1	0	1
0	1	1	1	0	0	1	1	1	0	1	1	1	1
0	1	1	1	0	0	1	1	1	1	0	0	0	1
0	1	1	1	0	0	1	1	1	1	0	0	1	1
0	1	1	1	0	0	1	1	1	1	0	1	0	1
0	1	1	1	0	0	1	1	1	1	0	1	1	1
0	1	1	1	0	0	1	1	1	1	1	0	0	1
0	1	1	1	0	0	1	1	1	1	1	0	1	1
0	1	1	1	0	0	1	1	1	1	1	1	0	1
0	1	1	1	0	0	1	1	1	1	1	1	1	1
0	1	1	1	0	1	0	0	0	0	0	0	0	1
0	1	1	1	0	1	0	0	0	0	0	0	1	1
0	1	1	1	0	1	0	0	0	0	0	1	0	1
0	1	1	1	0	1	0	0	0	0	0	1	1	1
0	1	1	1	0	1	0	0	0	0	1	0	0	1
0	1	1	1	0	1	0	0	0	0	1	0	1	1
0	1	1	1	0	1	0	0	0	0	1	1	0	1
0	1	1	1	0	1	0	0	0	0	1	1	1	1
0	1	1	1	0	1	0	0	0	1	0	0	0	1
0	1	1	1	0	1	0	0	0	1	0	0	1	1
0	1	1	1	0	1	0	0	0	1	0	1	0	1
0	1	1	1	0	1	0	0	0	1	0	1	1	1
0	1	1	1	0	1	0	0	0	1	1	0	0	1
0	1	1	1	0	1	0	0	0	1	1	0	1	1
0	1	1	1	0	1	0	0	0	1	1	1	0	1
0	1	1	1	0	1	0	0	0	1	1	1	1	1
0	1	1	1	0	1	0	0	1	0	0	0	0	1
0	1	1	1	0	1	0	0	1	0	0	0	1	1
0	1	1	1	0	1	0	0	1	0	0	1	0	1
0	1	1	1	0	1	0	0	1	0	0	1	1	1
0	1	1	1	0	1	0	0	1	0	1	0	0	1
0	1	1	1	0	1	0	0	1	0	1	0	1	1
0	1	1	1	0	1	0	0	1	0	1	1	0	1
0	1	1	1	0	1	0	0	1	0	1	1	1	1
0	1	1	1	0	1	0	0	1	1	0	0	0	1
0	1	1	1	0	1	0	0	1	1	0	0	1	1
0	1	1	1	0	1	0	0	1	1	0	1	0	1

0	1	1	1	0	1	0	0	1	1	0	1	1	1
0	1	1	1	0	1	0	0	1	1	1	0	0	1
0	1	1	1	0	1	0	0	1	1	1	0	1	1
0	1	1	1	0	1	0	0	1	1	1	1	0	1
0	1	1	1	0	1	0	0	1	1	1	1	1	1
0	1	1	1	0	1	0	1	0	0	0	0	0	1
0	1	1	1	0	1	0	1	0	0	0	0	1	1
0	1	1	1	0	1	0	1	0	0	0	1	0	1
0	1	1	1	0	1	0	1	0	0	0	1	1	1
0	1	1	1	0	1	0	1	0	0	1	0	0	1
0	1	1	1	0	1	0	1	0	0	1	0	1	1
0	1	1	1	0	1	0	1	0	0	1	1	0	1
0	1	1	1	0	1	0	1	0	0	1	1	1	1
0	1	1	1	0	1	0	1	0	1	0	0	0	1
0	1	1	1	0	1	0	1	0	1	0	0	1	1
0	1	1	1	0	1	0	1	0	1	0	1	0	1
0	1	1	1	0	1	0	1	0	1	0	1	1	1
0	1	1	1	0	1	0	1	0	1	1	0	0	1
0	1	1	1	0	1	0	1	0	1	1	0	1	1
0	1	1	1	0	1	0	1	0	1	1	1	0	1
0	1	1	1	0	1	0	1	0	1	1	1	1	1
0	1	1	1	0	1	0	1	1	0	0	0	0	1
0	1	1	1	0	1	0	1	1	0	0	0	1	1
0	1	1	1	0	1	0	1	1	0	0	1	0	1
0	1	1	1	0	1	0	1	1	0	0	1	1	1
0	1	1	1	0	1	0	1	1	0	1	0	0	1
0	1	1	1	0	1	0	1	1	0	1	0	1	1
0	1	1	1	0	1	0	1	1	0	1	1	0	1
0	1	1	1	0	1	0	1	1	0	1	1	1	1
0	1	1	1	0	1	0	1	1	1	0	0	0	1
0	1	1	1	0	1	0	1	1	1	0	0	1	1
0	1	1	1	0	1	0	1	1	1	0	1	0	1
0	1	1	1	0	1	0	1	1	1	0	1	1	1
0	1	1	1	0	1	0	1	1	1	1	0	0	1
0	1	1	1	0	1	0	1	1	1	1	0	1	1
0	1	1	1	0	1	0	1	1	1	1	1	0	1
0	1	1	1	0	1	0	1	1	1	1	1	1	1
0	1	1	1	0	1	1	0	0	0	0	0	0	1
0	1	1	1	0	1	1	0	0	0	0	0	1	1
0	1	1	1	0	1	1	0	0	0	0	1	0	1
0	1	1	1	0	1	1	0	0	0	0	1	1	1
0	1	1	1	0	1	1	0	0	0	1	0	0	1
0	1	1	1	0	1	1	0	0	0	1	0	1	1
0	1	1	1	0	1	1	0	0	0	1	1	0	1
0	1	1	1	0	1	1	0	0	0	1	1	1	1
0	1	1	1	0	1	1	0	0	1	0	0	0	1

0	1	1	1	0	1	1	0	0	1	0	0	1	1
0	1	1	1	0	1	1	0	0	1	0	1	0	1
0	1	1	1	0	1	1	0	0	1	0	1	1	1
0	1	1	1	0	1	1	0	0	1	1	0	0	1
0	1	1	1	0	1	1	0	0	1	1	0	1	1
0	1	1	1	0	1	1	0	0	1	1	1	0	1
0	1	1	1	0	1	1	0	0	1	1	1	1	1
0	1	1	1	0	1	1	0	1	0	0	0	0	1
0	1	1	1	0	1	1	0	1	0	0	0	1	1
0	1	1	1	0	1	1	0	1	0	0	1	0	1
0	1	1	1	0	1	1	0	1	0	0	1	1	1
0	1	1	1	0	1	1	0	1	0	1	0	0	1
0	1	1	1	0	1	1	0	1	0	1	0	1	1
0	1	1	1	0	1	1	0	1	0	1	1	0	1
0	1	1	1	0	1	1	0	1	0	1	1	1	1
0	1	1	1	0	1	1	0	1	1	0	0	0	1
0	1	1	1	0	1	1	0	1	1	0	0	1	1
0	1	1	1	0	1	1	0	1	1	0	1	0	1
0	1	1	1	0	1	1	0	1	1	0	1	1	1
0	1	1	1	0	1	1	0	1	1	1	0	0	1
0	1	1	1	0	1	1	0	1	1	1	0	1	1
0	1	1	1	0	1	1	0	1	1	1	1	0	1
0	1	1	1	0	1	1	0	1	1	1	1	1	1
0	1	1	1	0	1	1	1	0	0	1	0	0	1
0	1	1	1	0	1	1	1	0	0	0	0	1	1
0	1	1	1	0	1	1	1	0	0	0	1	0	1
0	1	1	1	0	1	1	1	0	0	0	1	1	1
0	1	1	1	0	1	1	1	0	0	0	0	0	1
0	1	1	1	0	1	1	1	0	0	1	0	1	1
0	1	1	1	0	1	1	1	0	0	1	1	0	1
0	1	1	1	0	1	1	1	0	0	1	1	1	1
0	1	1	1	0	1	1	1	0	1	1	0	0	1
0	1	1	1	0	1	1	1	0	1	0	0	1	1
0	1	1	1	0	1	1	1	0	1	0	1	0	1
0	1	1	1	0	1	1	1	0	1	0	1	1	1
0	1	1	1	0	1	1	1	0	1	0	0	0	1
0	1	1	1	0	1	1	1	0	1	1	0	1	1
0	1	1	1	0	1	1	1	0	1	1	1	0	1
0	1	1	1	0	1	1	1	0	1	1	1	1	1
0	1	1	1	0	1	1	1	1	0	1	0	0	1
0	1	1	1	0	1	1	1	1	0	0	0	1	1
0	1	1	1	0	1	1	1	1	0	0	1	0	1
0	1	1	1	0	1	1	1	1	0	0	1	1	1
0	1	1	1	0	1	1	1	1	0	1	0	0	1
0	1	1	1	0	1	1	1	1	0	1	1	1	1
0	1	1	1	0	1	1	1	1	1	1	0	0	1
0	1	1	1	0	1	1	1	1	1	0	0	1	1
0	1	1	1	0	1	1	1	1	1	0	1	0	1
0	1	1	1	0	1	1	1	1	1	0	1	1	1
0	1	1	1	0	1	1	1	1	1	0	0	0	1
0	1	1	1	0	1	1	1	1	1	1	0	1	1
0	1	1	1	0	1	1	1	1	1	1	1	0	1
0	1	1	1	0	1	1	1	1	1	1	1	1	1
0	1	1	1	0	1	1	1	1	0	1	0	0	1
0	1	1	1	0	1	1	1	1	0	0	0	1	1
0	1	1	1	0	1	1	1	1	0	0	1	0	1
0	1	1	1	0	1	1	1	1	0	0	1	1	1
0	1	1	1	0	1	1	1	1	0	0	0	0	1
0	1	1	1	0	1	1	1	1	0	1	0	1	1
0	1	1	1	0	1	1	1	1	0	1	1	0	1

0	1	1	1	0	1	1	1	1	0	1	1	1	1
0	1	1	1	0	1	1	1	1	1	1	0	0	1
0	1	1	1	0	1	1	1	1	1	0	0	1	1
0	1	1	1	0	1	1	1	1	1	0	1	0	1
0	1	1	1	0	1	1	1	1	1	0	1	1	1
0	1	1	1	0	1	1	1	1	1	0	0	0	1
0	1	1	1	0	1	1	1	1	1	1	0	1	1
0	1	1	1	0	1	1	1	1	1	1	1	0	1
0	1	1	1	0	1	1	1	1	1	1	1	1	1
0	1	1	1	1	0	0	0	0	0	0	0	0	1
0	1	1	1	1	0	0	0	0	0	0	0	1	1
0	1	1	1	1	0	0	0	0	0	0	1	0	1
0	1	1	1	1	0	0	0	0	0	0	1	1	1
0	1	1	1	1	0	0	0	0	0	1	0	0	1
0	1	1	1	1	0	0	0	0	0	1	0	1	1
0	1	1	1	1	0	0	0	0	0	1	1	0	1
0	1	1	1	1	0	0	0	0	0	1	1	1	1
0	1	1	1	1	0	0	0	0	1	0	0	0	1
0	1	1	1	1	0	0	0	0	1	0	0	1	1
0	1	1	1	1	0	0	0	0	1	0	1	0	1
0	1	1	1	1	0	0	0	0	1	0	1	1	1
0	1	1	1	1	0	0	0	0	1	1	0	0	1
0	1	1	1	1	0	0	0	0	1	1	0	1	1
0	1	1	1	1	0	0	0	0	1	1	1	0	1
0	1	1	1	1	0	0	0	0	1	1	1	1	1
0	1	1	1	1	0	0	0	1	0	0	0	0	1
0	1	1	1	1	0	0	0	1	0	0	0	1	1
0	1	1	1	1	0	0	0	1	0	0	1	0	1
0	1	1	1	1	0	0	0	1	0	0	1	1	1
0	1	1	1	1	0	0	0	1	0	1	0	0	1
0	1	1	1	1	0	0	0	1	0	1	0	1	1
0	1	1	1	1	0	0	0	1	0	1	1	0	1
0	1	1	1	1	0	0	0	1	0	1	1	1	1
0	1	1	1	1	0	0	0	1	1	0	0	0	1
0	1	1	1	1	0	0	0	1	1	0	0	1	1
0	1	1	1	1	0	0	0	1	1	0	1	0	1
0	1	1	1	1	0	0	0	1	1	0	1	1	1
0	1	1	1	1	0	0	0	1	1	1	0	0	1
0	1	1	1	1	0	0	0	1	1	1	0	1	1
0	1	1	1	1	0	0	0	1	1	1	1	0	1
0	1	1	1	1	0	0	0	1	1	1	1	1	1
0	1	1	1	1	0	0	1	0	0	0	0	0	1
0	1	1	1	1	0	0	1	0	0	0	0	1	1
0	1	1	1	1	0	0	1	0	0	0	1	0	1
0	1	1	1	1	0	0	1	0	0	0	1	1	1
0	1	1	1	1	0	0	1	0	0	1	0	0	1

0	1	1	1	1	0	0	1	0	0	1	0	1	1
0	1	1	1	1	0	0	1	0	0	1	1	0	1
0	1	1	1	1	0	0	1	0	0	1	1	1	1
0	1	1	1	1	0	0	1	0	1	0	0	0	1
0	1	1	1	1	0	0	1	0	1	0	0	1	1
0	1	1	1	1	0	0	1	0	1	0	1	0	1
0	1	1	1	1	0	0	1	0	1	0	1	1	1
0	1	1	1	1	0	0	1	0	1	1	0	0	1
0	1	1	1	1	0	0	1	0	1	1	0	1	1
0	1	1	1	1	0	0	1	0	1	1	1	0	1
0	1	1	1	1	0	0	1	0	1	1	1	1	1
0	1	1	1	1	0	0	1	1	0	0	0	0	1
0	1	1	1	1	0	0	1	1	0	0	0	1	1
0	1	1	1	1	0	0	1	1	0	0	1	0	1
0	1	1	1	1	0	0	1	1	0	0	1	1	1
0	1	1	1	1	0	0	1	1	0	1	0	0	1
0	1	1	1	1	0	0	1	1	0	1	0	1	1
0	1	1	1	1	0	0	1	1	0	1	1	0	1
0	1	1	1	1	0	0	1	1	0	1	1	1	1
0	1	1	1	1	0	0	1	1	1	0	0	0	1
0	1	1	1	1	0	0	1	1	1	0	0	1	1
0	1	1	1	1	0	0	1	1	1	0	1	0	1
0	1	1	1	1	0	0	1	1	1	0	1	1	1
0	1	1	1	1	0	0	1	1	1	1	0	0	1
0	1	1	1	1	0	0	1	1	1	1	0	1	1
0	1	1	1	1	0	0	1	1	1	1	1	0	1
0	1	1	1	1	0	0	1	1	1	1	1	1	1
0	1	1	1	1	0	1	0	0	0	0	0	0	1
0	1	1	1	1	0	1	0	0	0	0	0	1	1
0	1	1	1	1	0	1	0	0	0	0	1	0	1
0	1	1	1	1	0	1	0	0	0	0	1	1	1
0	1	1	1	1	0	1	0	0	0	1	0	0	1
0	1	1	1	1	0	1	0	0	0	1	0	1	1
0	1	1	1	1	0	1	0	0	0	1	1	0	1
0	1	1	1	1	0	1	0	0	0	1	1	1	1
0	1	1	1	1	0	1	0	0	1	0	0	0	1
0	1	1	1	1	0	1	0	0	1	0	0	1	1
0	1	1	1	1	0	1	0	0	1	0	1	0	1
0	1	1	1	1	0	1	0	0	1	0	1	1	1
0	1	1	1	1	0	1	0	0	1	1	0	0	1
0	1	1	1	1	0	1	0	0	1	1	0	1	1
0	1	1	1	1	0	1	0	0	1	1	1	0	1
0	1	1	1	1	0	1	0	0	1	1	1	1	1
0	1	1	1	1	0	1	0	1	0	0	0	0	1
0	1	1	1	1	0	1	0	1	0	0	0	1	1
0	1	1	1	1	0	1	0	1	0	0	1	0	1

0	1	1	1	1	0	1	0	1	0	0	1	1	1
0	1	1	1	1	0	1	0	1	0	1	0	0	1
0	1	1	1	1	0	1	0	1	0	1	0	1	1
0	1	1	1	1	0	1	0	1	0	1	1	0	1
0	1	1	1	1	0	1	0	1	0	1	1	1	1
0	1	1	1	1	0	1	0	1	1	0	0	0	1
0	1	1	1	1	0	1	0	1	1	0	0	1	1
0	1	1	1	1	0	1	0	1	1	0	1	0	1
0	1	1	1	1	0	1	0	1	1	0	1	1	1
0	1	1	1	1	0	1	0	1	1	1	0	0	1
0	1	1	1	1	0	1	0	1	1	1	0	1	1
0	1	1	1	1	0	1	0	1	1	1	1	0	1
0	1	1	1	1	0	1	0	1	1	1	1	1	1
0	1	1	1	1	0	1	1	0	0	0	0	0	1
0	1	1	1	1	0	1	1	0	0	0	0	1	1
0	1	1	1	1	0	1	1	0	0	0	1	0	1
0	1	1	1	1	0	1	1	0	0	0	1	1	1
0	1	1	1	1	0	1	1	0	0	1	0	0	1
0	1	1	1	1	0	1	1	0	0	1	0	1	1
0	1	1	1	1	0	1	1	0	0	1	1	0	1
0	1	1	1	1	0	1	1	0	0	1	1	1	1
0	1	1	1	1	0	1	1	0	1	0	0	0	1
0	1	1	1	1	0	1	1	0	1	0	0	1	1
0	1	1	1	1	0	1	1	0	1	0	1	0	1
0	1	1	1	1	0	1	1	0	1	0	1	1	1
0	1	1	1	1	0	1	1	0	1	1	0	0	1
0	1	1	1	1	0	1	1	0	1	1	0	1	1
0	1	1	1	1	0	1	1	0	1	1	1	0	1
0	1	1	1	1	0	1	1	0	1	1	1	1	1
0	1	1	1	1	0	1	1	1	0	0	0	0	1
0	1	1	1	1	0	1	1	1	0	0	0	1	1
0	1	1	1	1	0	1	1	1	0	0	1	0	1
0	1	1	1	1	0	1	1	1	0	0	1	1	1
0	1	1	1	1	0	1	1	1	0	1	0	0	1
0	1	1	1	1	0	1	1	1	0	1	0	1	1
0	1	1	1	1	0	1	1	1	0	1	1	0	1
0	1	1	1	1	0	1	1	1	0	1	1	1	1
0	1	1	1	1	0	1	1	1	1	0	0	0	1
0	1	1	1	1	0	1	1	1	1	0	0	1	1
0	1	1	1	1	0	1	1	1	1	0	1	0	1
0	1	1	1	1	0	1	1	1	1	0	1	1	1
0	1	1	1	1	0	1	1	1	1	1	0	0	1
0	1	1	1	1	0	1	1	1	1	1	0	1	1
0	1	1	1	1	0	1	1	1	1	1	1	0	1
0	1	1	1	1	0	1	1	1	1	1	1	1	1
0	1	1	1	1	1	0	0	0	0	0	0	0	1

0	1	1	1	1	1	0	0	0	0	0	0	1	1
0	1	1	1	1	1	0	0	0	0	0	1	0	1
0	1	1	1	1	1	0	0	0	0	0	1	1	1
0	1	1	1	1	1	0	0	0	0	1	0	0	1
0	1	1	1	1	1	0	0	0	0	1	0	1	1
0	1	1	1	1	1	0	0	0	0	1	1	0	1
0	1	1	1	1	1	0	0	0	0	1	1	1	1
0	1	1	1	1	1	0	0	0	1	0	0	0	1
0	1	1	1	1	1	0	0	0	1	0	0	1	1
0	1	1	1	1	1	0	0	0	1	0	1	0	1
0	1	1	1	1	1	0	0	0	1	0	1	1	1
0	1	1	1	1	1	0	0	0	1	1	0	0	1
0	1	1	1	1	1	0	0	0	1	1	0	1	1
0	1	1	1	1	1	0	0	0	1	1	1	0	1
0	1	1	1	1	1	0	0	0	1	1	1	1	1
0	1	1	1	1	1	0	0	1	0	0	0	0	1
0	1	1	1	1	1	0	0	1	0	0	0	1	1
0	1	1	1	1	1	0	0	1	0	0	1	0	1
0	1	1	1	1	1	0	0	1	0	0	1	1	1
0	1	1	1	1	1	0	0	1	0	1	0	0	1
0	1	1	1	1	1	0	0	1	0	1	0	1	1
0	1	1	1	1	1	0	0	1	0	1	1	0	1
0	1	1	1	1	1	0	0	1	0	1	1	1	1
0	1	1	1	1	1	0	0	1	1	0	0	0	1
0	1	1	1	1	1	0	0	1	1	0	0	1	1
0	1	1	1	1	1	0	0	1	1	0	1	0	1
0	1	1	1	1	1	0	0	1	1	0	1	1	1
0	1	1	1	1	1	0	0	1	1	1	0	0	1
0	1	1	1	1	1	0	0	1	1	1	0	1	1
0	1	1	1	1	1	0	0	1	1	1	1	0	1
0	1	1	1	1	1	0	0	1	1	1	1	1	1
0	1	1	1	1	1	0	1	0	0	0	0	0	1
0	1	1	1	1	1	0	1	0	0	0	0	1	1
0	1	1	1	1	1	0	1	0	0	0	1	0	1
0	1	1	1	1	1	0	1	0	0	0	1	1	1
0	1	1	1	1	1	0	1	0	0	1	0	0	1
0	1	1	1	1	1	0	1	0	0	1	0	1	1
0	1	1	1	1	1	0	1	0	0	1	1	0	1
0	1	1	1	1	1	0	1	0	0	1	1	1	1
0	1	1	1	1	1	0	1	0	1	0	0	0	1
0	1	1	1	1	1	0	1	0	1	0	0	1	1
0	1	1	1	1	1	0	1	0	1	0	1	0	1
0	1	1	1	1	1	0	1	0	1	0	1	1	1
0	1	1	1	1	1	0	1	0	1	1	0	0	1
0	1	1	1	1	1	0	1	0	1	1	0	1	1
0	1	1	1	1	1	0	1	0	1	1	1	0	1

0	1	1	1	1	1	0	1	0	1	1	1	1	1
0	1	1	1	1	1	0	1	1	0	0	0	0	1
0	1	1	1	1	1	0	1	1	0	0	0	1	1
0	1	1	1	1	1	0	1	1	0	0	1	0	1
0	1	1	1	1	1	0	1	1	0	0	1	1	1
0	1	1	1	1	1	0	1	1	0	1	0	0	1
0	1	1	1	1	1	0	1	1	0	1	0	1	1
0	1	1	1	1	1	0	1	1	0	1	1	0	1
0	1	1	1	1	1	0	1	1	0	1	1	1	1
0	1	1	1	1	1	0	1	1	1	0	0	0	1
0	1	1	1	1	1	0	1	1	1	0	0	1	1
0	1	1	1	1	1	0	1	1	1	0	1	0	1
0	1	1	1	1	1	0	1	1	1	0	1	1	1
0	1	1	1	1	1	0	1	1	1	1	0	0	1
0	1	1	1	1	1	0	1	1	1	1	0	1	1
0	1	1	1	1	1	0	1	1	1	1	1	0	1
0	1	1	1	1	1	0	1	1	1	1	1	1	1
0	1	1	1	1	1	1	0	0	0	0	0	0	1
0	1	1	1	1	1	1	0	0	0	0	0	1	1
0	1	1	1	1	1	1	0	0	0	0	1	0	1
0	1	1	1	1	1	1	0	0	0	0	1	1	1
0	1	1	1	1	1	1	0	0	0	1	0	0	1
0	1	1	1	1	1	1	0	0	0	1	0	1	1
0	1	1	1	1	1	1	0	0	0	1	1	0	1
0	1	1	1	1	1	1	0	0	0	1	1	1	1
0	1	1	1	1	1	1	0	0	1	0	0	0	1
0	1	1	1	1	1	1	0	0	1	0	0	1	1
0	1	1	1	1	1	1	0	0	1	0	1	0	1
0	1	1	1	1	1	1	0	0	1	0	1	1	1
0	1	1	1	1	1	1	0	0	1	1	0	0	1
0	1	1	1	1	1	1	0	0	1	1	0	1	1
0	1	1	1	1	1	1	0	0	1	1	1	0	1
0	1	1	1	1	1	1	0	0	1	1	1	1	1
0	1	1	1	1	1	1	0	1	0	0	0	0	1
0	1	1	1	1	1	1	0	1	0	0	0	1	1
0	1	1	1	1	1	1	0	1	0	0	1	0	1
0	1	1	1	1	1	1	0	1	0	0	1	1	1
0	1	1	1	1	1	1	0	1	0	1	0	0	1
0	1	1	1	1	1	1	0	1	0	1	0	1	1
0	1	1	1	1	1	1	0	1	0	1	1	0	1
0	1	1	1	1	1	1	0	1	0	1	1	1	1
0	1	1	1	1	1	1	0	1	1	0	0	0	1
0	1	1	1	1	1	1	0	1	1	0	0	1	1
0	1	1	1	1	1	1	0	1	1	0	1	0	1
0	1	1	1	1	1	1	0	1	1	0	1	1	1
0	1	1	1	1	1	1	0	1	1	1	0	0	1

0	1	1	1	1	1	1	0	1	1	1	0	1	1
0	1	1	1	1	1	1	0	1	1	1	1	0	1
0	1	1	1	1	1	1	0	1	1	1	1	1	1
0	1	1	1	1	1	1	1	0	0	1	0	0	1
0	1	1	1	1	1	1	1	0	0	0	0	1	1
0	1	1	1	1	1	1	1	0	0	0	1	0	1
0	1	1	1	1	1	1	1	0	0	0	1	1	1
0	1	1	1	1	1	1	1	0	0	0	0	0	1
0	1	1	1	1	1	1	1	0	0	1	0	1	1
0	1	1	1	1	1	1	1	0	0	1	1	0	1
0	1	1	1	1	1	1	1	0	0	1	1	1	1
0	1	1	1	1	1	1	1	0	1	1	0	0	1
0	1	1	1	1	1	1	1	0	1	0	0	1	1
0	1	1	1	1	1	1	1	0	1	0	1	0	1
0	1	1	1	1	1	1	1	0	1	0	1	1	1
0	1	1	1	1	1	1	1	0	1	0	0	0	1
0	1	1	1	1	1	1	1	0	1	1	0	1	1
0	1	1	1	1	1	1	1	0	1	1	1	0	1
0	1	1	1	1	1	1	1	0	1	1	1	1	1
0	1	1	1	1	1	1	1	1	0	1	0	0	1
0	1	1	1	1	1	1	1	1	0	0	0	1	1
0	1	1	1	1	1	1	1	1	0	0	1	0	1
0	1	1	1	1	1	1	1	1	0	0	1	1	1
0	1	1	1	1	1	1	1	1	0	0	0	0	1
0	1	1	1	1	1	1	1	1	0	1	0	1	1
0	1	1	1	1	1	1	1	1	0	1	1	0	1
0	1	1	1	1	1	1	1	1	0	1	1	1	1
0	1	1	1	1	1	1	1	1	1	1	0	0	1
0	1	1	1	1	1	1	1	1	1	0	0	1	1
0	1	1	1	1	1	1	1	1	1	0	1	0	1
0	1	1	1	1	1	1	1	1	1	0	1	1	1
0	1	1	1	1	1	1	1	1	1	0	0	0	1
0	1	1	1	1	1	1	1	1	1	1	0	1	1
0	1	1	1	1	1	1	1	1	1	1	1	0	1
0	1	1	1	1	1	1	1	1	1	1	1	1	1
1	0	0	0	0	0	0	0	0	0	0	0	0	1
1	0	0	0	0	0	0	0	0	0	0	0	1	1
1	0	0	0	0	0	0	0	0	0	0	1	0	1
1	0	0	0	0	0	0	0	0	0	0	1	1	1
1	0	0	0	0	0	0	0	0	0	1	0	0	1
1	0	0	0	0	0	0	0	0	0	1	0	1	1
1	0	0	0	0	0	0	0	0	0	1	1	0	1
1	0	0	0	0	0	0	0	0	0	1	1	1	1
1	0	0	0	0	0	0	0	0	1	0	0	0	1
1	0	0	0	0	0	0	0	0	1	0	0	1	1
1	0	0	0	0	0	0	0	0	1	0	1	0	1

1	0	0	0	0	0	0	0	0	1	0	1	1	1
1	0	0	0	0	0	0	0	0	1	1	0	0	1
1	0	0	0	0	0	0	0	0	1	1	0	1	1
1	0	0	0	0	0	0	0	0	1	1	1	0	1
1	0	0	0	0	0	0	0	0	1	1	1	1	1
1	0	0	0	0	0	0	0	1	0	0	0	0	1
1	0	0	0	0	0	0	0	1	0	0	0	1	1
1	0	0	0	0	0	0	0	1	0	0	1	0	1
1	0	0	0	0	0	0	0	1	0	0	1	1	1
1	0	0	0	0	0	0	0	1	0	1	0	0	1
1	0	0	0	0	0	0	0	1	0	1	0	1	1
1	0	0	0	0	0	0	0	1	0	1	1	0	1
1	0	0	0	0	0	0	0	1	0	1	1	1	1
1	0	0	0	0	0	0	0	1	1	0	0	0	1
1	0	0	0	0	0	0	0	1	1	0	0	1	1
1	0	0	0	0	0	0	0	1	1	0	1	0	1
1	0	0	0	0	0	0	0	1	1	0	1	1	1
1	0	0	0	0	0	0	0	1	1	1	0	0	1
1	0	0	0	0	0	0	0	1	1	1	0	1	1
1	0	0	0	0	0	0	0	1	1	1	1	0	1
1	0	0	0	0	0	0	0	1	1	1	1	1	1
1	0	0	0	0	0	0	1	0	0	0	0	0	1
1	0	0	0	0	0	0	1	0	0	0	0	1	1
1	0	0	0	0	0	0	1	0	0	0	1	0	1
1	0	0	0	0	0	0	1	0	0	0	1	1	1
1	0	0	0	0	0	0	1	0	0	1	0	0	1
1	0	0	0	0	0	0	1	0	0	1	0	1	1
1	0	0	0	0	0	0	1	0	0	1	1	0	1
1	0	0	0	0	0	0	1	0	0	1	1	1	1
1	0	0	0	0	0	0	1	0	1	0	0	0	1
1	0	0	0	0	0	0	1	0	1	0	0	1	1
1	0	0	0	0	0	0	1	0	1	0	1	0	1
1	0	0	0	0	0	0	1	0	1	0	1	1	1
1	0	0	0	0	0	0	1	0	1	1	0	0	1
1	0	0	0	0	0	0	1	0	1	1	0	1	1
1	0	0	0	0	0	0	1	0	1	1	1	0	1
1	0	0	0	0	0	0	1	0	1	1	1	1	1
1	0	0	0	0	0	0	1	1	0	0	0	0	1
1	0	0	0	0	0	0	1	1	0	0	0	1	1
1	0	0	0	0	0	0	1	1	0	0	1	0	1
1	0	0	0	0	0	0	1	1	0	0	1	1	1
1	0	0	0	0	0	0	1	1	0	1	0	0	1
1	0	0	0	0	0	0	1	1	0	1	0	1	1
1	0	0	0	0	0	0	1	1	0	1	1	0	1
1	0	0	0	0	0	0	1	1	0	1	1	1	1
1	0	0	0	0	0	0	1	1	1	0	0	0	1

1	0	0	0	0	0	0	1	1	1	0	0	1	1
1	0	0	0	0	0	0	1	1	1	0	1	0	1
1	0	0	0	0	0	0	1	1	1	0	1	1	1
1	0	0	0	0	0	0	1	1	1	1	0	0	1
1	0	0	0	0	0	0	1	1	1	1	0	1	1
1	0	0	0	0	0	0	1	1	1	1	1	0	1
1	0	0	0	0	0	0	1	1	1	1	1	1	1
1	0	0	0	0	0	1	0	0	0	0	0	0	1
1	0	0	0	0	0	1	0	0	0	0	0	1	1
1	0	0	0	0	0	1	0	0	0	0	1	0	1
1	0	0	0	0	0	1	0	0	0	0	1	1	1
1	0	0	0	0	0	1	0	0	0	1	0	0	1
1	0	0	0	0	0	1	0	0	0	1	0	1	1
1	0	0	0	0	0	1	0	0	0	1	1	0	1
1	0	0	0	0	0	1	0	0	0	1	1	1	1
1	0	0	0	0	0	1	0	0	1	0	0	0	1
1	0	0	0	0	0	1	0	0	1	0	0	1	1
1	0	0	0	0	0	1	0	0	1	0	1	0	1
1	0	0	0	0	0	1	0	0	1	0	1	1	1
1	0	0	0	0	0	1	0	0	1	1	0	0	1
1	0	0	0	0	0	1	0	0	1	1	0	1	1
1	0	0	0	0	0	1	0	0	1	1	1	0	1
1	0	0	0	0	0	1	0	0	1	1	1	1	1
1	0	0	0	0	0	1	0	1	0	0	0	0	1
1	0	0	0	0	0	1	0	1	0	0	0	1	1
1	0	0	0	0	0	1	0	1	0	0	1	0	1
1	0	0	0	0	0	1	0	1	0	0	1	1	1
1	0	0	0	0	0	1	0	1	0	1	0	0	1
1	0	0	0	0	0	1	0	1	0	1	0	1	1
1	0	0	0	0	0	1	0	1	0	1	1	0	1
1	0	0	0	0	0	1	0	1	0	1	1	1	1
1	0	0	0	0	0	1	0	1	1	0	0	0	1
1	0	0	0	0	0	1	0	1	1	0	0	1	1
1	0	0	0	0	0	1	0	1	1	0	1	0	1
1	0	0	0	0	0	1	0	1	1	0	1	1	1
1	0	0	0	0	0	1	0	1	1	1	0	0	1
1	0	0	0	0	0	1	0	1	1	1	0	1	1
1	0	0	0	0	0	1	0	1	1	1	1	0	1
1	0	0	0	0	0	1	0	1	1	1	1	1	1
1	0	0	0	0	0	1	1	0	0	0	0	0	1
1	0	0	0	0	0	1	1	0	0	0	0	1	1
1	0	0	0	0	0	1	1	0	0	0	1	0	1
1	0	0	0	0	0	1	1	0	0	0	1	1	1
1	0	0	0	0	0	1	1	0	0	1	0	0	1
1	0	0	0	0	0	1	1	0	0	1	0	1	1
1	0	0	0	0	0	1	1	0	0	1	1	0	1

1	0	0	0	0	0	1	1	0	0	1	1	1	1
1	0	0	0	0	0	1	1	0	1	0	0	0	1
1	0	0	0	0	0	1	1	0	1	0	0	1	1
1	0	0	0	0	0	1	1	0	1	0	1	0	1
1	0	0	0	0	0	1	1	0	1	0	1	1	1
1	0	0	0	0	0	1	1	0	1	1	0	0	1
1	0	0	0	0	0	1	1	0	1	1	0	1	1
1	0	0	0	0	0	1	1	0	1	1	1	0	1
1	0	0	0	0	0	1	1	0	1	1	1	1	1
1	0	0	0	0	0	1	1	1	0	0	0	0	1
1	0	0	0	0	0	1	1	1	0	0	0	1	1
1	0	0	0	0	0	1	1	1	0	0	1	0	1
1	0	0	0	0	0	1	1	1	0	0	1	1	1
1	0	0	0	0	0	1	1	1	0	1	0	0	1
1	0	0	0	0	0	1	1	1	0	1	0	1	1
1	0	0	0	0	0	1	1	1	0	1	1	0	1
1	0	0	0	0	0	1	1	1	0	1	1	1	1
1	0	0	0	0	0	1	1	1	1	0	0	0	1
1	0	0	0	0	0	1	1	1	1	0	0	1	1
1	0	0	0	0	0	1	1	1	1	0	1	0	1
1	0	0	0	0	0	1	1	1	1	0	1	1	1
1	0	0	0	0	0	1	1	1	1	1	0	0	1
1	0	0	0	0	0	1	1	1	1	1	0	1	1
1	0	0	0	0	0	1	1	1	1	1	1	0	1
1	0	0	0	0	0	1	1	1	1	1	1	1	1
1	0	0	0	0	1	0	0	0	0	0	0	0	1
1	0	0	0	0	1	0	0	0	0	0	0	1	1
1	0	0	0	0	1	0	0	0	0	0	1	0	1
1	0	0	0	0	1	0	0	0	0	0	1	1	1
1	0	0	0	0	1	0	0	0	0	1	0	0	1
1	0	0	0	0	1	0	0	0	0	1	0	1	1
1	0	0	0	0	1	0	0	0	0	1	1	0	1
1	0	0	0	0	1	0	0	0	0	1	1	1	1
1	0	0	0	0	1	0	0	0	1	0	0	0	1
1	0	0	0	0	1	0	0	0	1	0	0	1	1
1	0	0	0	0	1	0	0	0	1	0	1	0	1
1	0	0	0	0	1	0	0	0	1	0	1	1	1
1	0	0	0	0	1	0	0	0	1	1	0	0	1
1	0	0	0	0	1	0	0	0	1	1	0	1	1
1	0	0	0	0	1	0	0	0	1	1	1	0	1
1	0	0	0	0	1	0	0	0	1	1	1	1	1
1	0	0	0	0	1	0	0	1	0	0	0	0	1
1	0	0	0	0	1	0	0	1	0	0	0	1	1
1	0	0	0	0	1	0	0	1	0	0	1	0	1
1	0	0	0	0	1	0	0	1	0	0	1	1	1
1	0	0	0	0	1	0	0	1	0	1	0	0	1

1	0	0	0	0	1	0	0	1	0	1	0	1	1
1	0	0	0	0	1	0	0	1	0	1	1	0	1
1	0	0	0	0	1	0	0	1	0	1	1	1	1
1	0	0	0	0	1	0	0	1	1	0	0	0	1
1	0	0	0	0	1	0	0	1	1	0	0	1	1
1	0	0	0	0	1	0	0	1	1	0	1	0	1
1	0	0	0	0	1	0	0	1	1	0	1	1	1
1	0	0	0	0	1	0	0	1	1	1	0	0	1
1	0	0	0	0	1	0	0	1	1	1	0	1	1
1	0	0	0	0	1	0	0	1	1	1	1	0	1
1	0	0	0	0	1	0	0	1	1	1	1	1	1
1	0	0	0	0	1	0	1	0	0	0	0	0	1
1	0	0	0	0	1	0	1	0	0	0	0	1	1
1	0	0	0	0	1	0	1	0	0	0	1	0	1
1	0	0	0	0	1	0	1	0	0	0	1	1	1
1	0	0	0	0	1	0	1	0	0	1	0	0	1
1	0	0	0	0	1	0	1	0	0	1	0	1	1
1	0	0	0	0	1	0	1	0	0	1	1	0	1
1	0	0	0	0	1	0	1	0	0	1	1	1	1
1	0	0	0	0	1	0	1	0	1	0	0	0	1
1	0	0	0	0	1	0	1	0	1	0	0	1	1
1	0	0	0	0	1	0	1	0	1	0	1	0	1
1	0	0	0	0	1	0	1	0	1	0	1	1	1
1	0	0	0	0	1	0	1	0	1	1	0	0	1
1	0	0	0	0	1	0	1	0	1	1	0	1	1
1	0	0	0	0	1	0	1	0	1	1	1	0	1
1	0	0	0	0	1	0	1	0	1	1	1	1	1
1	0	0	0	0	1	0	1	1	0	0	0	0	1
1	0	0	0	0	1	0	1	1	0	0	0	1	1
1	0	0	0	0	1	0	1	1	0	0	1	0	1
1	0	0	0	0	1	0	1	1	0	0	1	1	1
1	0	0	0	0	1	0	1	1	0	1	0	0	1
1	0	0	0	0	1	0	1	1	0	1	0	1	1
1	0	0	0	0	1	0	1	1	0	1	1	0	1
1	0	0	0	0	1	0	1	1	0	1	1	1	1
1	0	0	0	0	1	0	1	1	1	0	0	0	1
1	0	0	0	0	1	0	1	1	1	0	0	1	1
1	0	0	0	0	1	0	1	1	1	0	1	0	1
1	0	0	0	0	1	0	1	1	1	0	1	1	1
1	0	0	0	0	1	0	1	1	1	1	0	0	1
1	0	0	0	0	1	0	1	1	1	1	0	1	1
1	0	0	0	0	1	0	1	1	1	1	1	0	1
1	0	0	0	0	1	0	1	1	1	1	1	1	1
1	0	0	0	0	1	1	0	0	0	0	0	0	1
1	0	0	0	0	1	1	0	0	0	0	0	1	1
1	0	0	0	0	1	1	0	0	0	0	1	0	1

1	0	0	0	0	1	1	0	0	0	0	1	1	1
1	0	0	0	0	1	1	0	0	0	1	0	0	1
1	0	0	0	0	1	1	0	0	0	1	0	1	1
1	0	0	0	0	1	1	0	0	0	1	1	0	1
1	0	0	0	0	1	1	0	0	0	1	1	1	1
1	0	0	0	0	1	1	0	0	1	0	0	0	1
1	0	0	0	0	1	1	0	0	1	0	0	1	1
1	0	0	0	0	1	1	0	0	1	0	1	0	1
1	0	0	0	0	1	1	0	0	1	0	1	1	1
1	0	0	0	0	1	1	0	0	1	1	0	0	1
1	0	0	0	0	1	1	0	0	1	1	0	1	1
1	0	0	0	0	1	1	0	0	1	1	1	0	1
1	0	0	0	0	1	1	0	0	1	1	1	1	1
1	0	0	0	0	1	1	0	1	0	0	0	0	1
1	0	0	0	0	1	1	0	1	0	0	0	1	1
1	0	0	0	0	1	1	0	1	0	0	1	0	1
1	0	0	0	0	1	1	0	1	0	0	1	1	1
1	0	0	0	0	1	1	0	1	0	1	0	0	1
1	0	0	0	0	1	1	0	1	0	1	0	1	1
1	0	0	0	0	1	1	0	1	0	1	1	0	1
1	0	0	0	0	1	1	0	1	0	1	1	1	1
1	0	0	0	0	1	1	0	1	1	0	0	0	1
1	0	0	0	0	1	1	0	1	1	0	0	1	1
1	0	0	0	0	1	1	0	1	1	0	1	0	1
1	0	0	0	0	1	1	0	1	1	0	1	1	1
1	0	0	0	0	1	1	0	1	1	1	0	0	1
1	0	0	0	0	1	1	0	1	1	1	0	1	1
1	0	0	0	0	1	1	0	1	1	1	1	0	1
1	0	0	0	0	1	1	0	1	1	1	1	1	1
1	0	0	0	0	1	1	1	0	0	1	0	0	1
1	0	0	0	0	1	1	1	0	0	0	0	1	1
1	0	0	0	0	1	1	1	0	0	0	1	0	1
1	0	0	0	0	1	1	1	0	0	0	1	1	1
1	0	0	0	0	1	1	1	0	0	0	0	0	1
1	0	0	0	0	1	1	1	0	0	1	0	1	1
1	0	0	0	0	1	1	1	0	0	1	1	0	1
1	0	0	0	0	1	1	1	0	0	1	1	1	1
1	0	0	0	0	1	1	1	0	1	1	0	0	1
1	0	0	0	0	1	1	1	0	1	0	0	1	1
1	0	0	0	0	1	1	1	0	1	0	1	0	1
1	0	0	0	0	1	1	1	0	1	0	1	1	1
1	0	0	0	0	1	1	1	0	1	0	0	0	1
1	0	0	0	0	1	1	1	0	1	1	0	1	1
1	0	0	0	0	1	1	1	0	1	1	1	0	1
1	0	0	0	0	1	1	1	0	1	1	1	1	1
1	0	0	0	0	1	1	1	1	0	1	0	0	1

1	0	0	0	0	1	1	1	1	0	0	0	1	1
1	0	0	0	0	1	1	1	1	0	0	1	0	1
1	0	0	0	0	1	1	1	1	0	0	1	1	1
1	0	0	0	0	1	1	1	1	0	0	0	0	1
1	0	0	0	0	1	1	1	1	0	1	0	1	1
1	0	0	0	0	1	1	1	1	0	1	1	0	1
1	0	0	0	0	1	1	1	1	0	1	1	1	1
1	0	0	0	0	1	1	1	1	1	1	0	0	1
1	0	0	0	0	1	1	1	1	1	0	0	1	1
1	0	0	0	0	1	1	1	1	1	0	1	0	1
1	0	0	0	0	1	1	1	1	1	0	1	1	1
1	0	0	0	0	1	1	1	1	1	0	0	0	1
1	0	0	0	0	1	1	1	1	1	1	0	1	1
1	0	0	0	0	1	1	1	1	1	1	1	0	1
1	0	0	0	0	1	1	1	1	1	1	1	1	1
1	0	0	0	1	0	0	0	0	0	0	0	0	1
1	0	0	0	1	0	0	0	0	0	0	0	1	1
1	0	0	0	1	0	0	0	0	0	0	1	0	1
1	0	0	0	1	0	0	0	0	0	0	1	1	1
1	0	0	0	1	0	0	0	0	0	1	0	0	1
1	0	0	0	1	0	0	0	0	0	1	0	1	1
1	0	0	0	1	0	0	0	0	0	1	1	0	1
1	0	0	0	1	0	0	0	0	0	1	1	1	1
1	0	0	0	1	0	0	0	0	1	0	0	0	1
1	0	0	0	1	0	0	0	0	1	0	0	1	1
1	0	0	0	1	0	0	0	0	1	0	1	0	1
1	0	0	0	1	0	0	0	0	1	0	1	1	1
1	0	0	0	1	0	0	0	0	1	1	0	0	1
1	0	0	0	1	0	0	0	0	1	1	0	1	1
1	0	0	0	1	0	0	0	0	1	1	1	0	1
1	0	0	0	1	0	0	0	0	1	1	1	1	1
1	0	0	0	1	0	0	0	1	0	0	0	0	1
1	0	0	0	1	0	0	0	1	0	0	0	1	1
1	0	0	0	1	0	0	0	1	0	0	1	0	1
1	0	0	0	1	0	0	0	1	0	0	1	1	1
1	0	0	0	1	0	0	0	1	0	1	0	0	1
1	0	0	0	1	0	0	0	1	0	1	0	1	1
1	0	0	0	1	0	0	0	1	0	1	1	0	1
1	0	0	0	1	0	0	0	1	0	1	1	1	1
1	0	0	0	1	0	0	0	1	1	0	0	0	1
1	0	0	0	1	0	0	0	1	1	0	0	1	1
1	0	0	0	1	0	0	0	1	1	0	1	0	1
1	0	0	0	1	0	0	0	1	1	0	1	1	1
1	0	0	0	1	0	0	0	1	1	1	0	0	1
1	0	0	0	1	0	0	0	1	1	1	0	1	1
1	0	0	0	1	0	0	0	1	1	1	1	0	1

1	0	0	0	1	0	0	0	1	1	1	1	1	1
1	0	0	0	1	0	0	1	0	0	0	0	0	1
1	0	0	0	1	0	0	1	0	0	0	0	1	1
1	0	0	0	1	0	0	1	0	0	0	1	0	1
1	0	0	0	1	0	0	1	0	0	0	1	1	1
1	0	0	0	1	0	0	1	0	0	1	0	0	1
1	0	0	0	1	0	0	1	0	0	1	0	1	1
1	0	0	0	1	0	0	1	0	0	1	1	0	1
1	0	0	0	1	0	0	1	0	0	1	1	1	1
1	0	0	0	1	0	0	1	0	1	0	0	0	1
1	0	0	0	1	0	0	1	0	1	0	0	1	1
1	0	0	0	1	0	0	1	0	1	0	1	0	1
1	0	0	0	1	0	0	1	0	1	0	1	1	1
1	0	0	0	1	0	0	1	0	1	1	0	0	1
1	0	0	0	1	0	0	1	0	1	1	0	1	1
1	0	0	0	1	0	0	1	0	1	1	1	0	1
1	0	0	0	1	0	0	1	0	1	1	1	1	1
1	0	0	0	1	0	0	1	1	0	0	0	0	1
1	0	0	0	1	0	0	1	1	0	0	0	1	1
1	0	0	0	1	0	0	1	1	0	0	1	0	1
1	0	0	0	1	0	0	1	1	0	0	1	1	1
1	0	0	0	1	0	0	1	1	0	1	0	0	1
1	0	0	0	1	0	0	1	1	0	1	0	1	1
1	0	0	0	1	0	0	1	1	0	1	1	0	1
1	0	0	0	1	0	0	1	1	0	1	1	1	1
1	0	0	0	1	0	0	1	1	1	0	0	0	1
1	0	0	0	1	0	0	1	1	1	0	0	1	1
1	0	0	0	1	0	0	1	1	1	0	1	0	1
1	0	0	0	1	0	0	1	1	1	0	1	1	1
1	0	0	0	1	0	0	1	1	1	1	0	0	1
1	0	0	0	1	0	0	1	1	1	1	0	1	1
1	0	0	0	1	0	0	1	1	1	1	1	0	1
1	0	0	0	1	0	0	1	1	1	1	1	1	1
1	0	0	0	1	0	1	0	0	0	0	0	0	1
1	0	0	0	1	0	1	0	0	0	0	0	1	1
1	0	0	0	1	0	1	0	0	0	0	1	0	1
1	0	0	0	1	0	1	0	0	0	0	1	1	1
1	0	0	0	1	0	1	0	0	0	1	0	0	1
1	0	0	0	1	0	1	0	0	0	1	0	1	1
1	0	0	0	1	0	1	0	0	0	1	1	0	1
1	0	0	0	1	0	1	0	0	0	1	1	1	1
1	0	0	0	1	0	1	0	0	1	0	0	0	1
1	0	0	0	1	0	1	0	0	1	0	0	1	1
1	0	0	0	1	0	1	0	0	1	0	1	0	1
1	0	0	0	1	0	1	0	0	1	0	1	1	1
1	0	0	0	1	0	1	0	0	1	1	0	0	1

1	0	0	0	1	0	1	0	0	1	1	0	1	1
1	0	0	0	1	0	1	0	0	1	1	1	0	1
1	0	0	0	1	0	1	0	0	1	1	1	1	1
1	0	0	0	1	0	1	0	1	0	0	0	0	1
1	0	0	0	1	0	1	0	1	0	0	0	1	1
1	0	0	0	1	0	1	0	1	0	0	1	0	1
1	0	0	0	1	0	1	0	1	0	0	1	1	1
1	0	0	0	1	0	1	0	1	0	1	0	0	1
1	0	0	0	1	0	1	0	1	0	1	0	1	1
1	0	0	0	1	0	1	0	1	0	1	1	0	1
1	0	0	0	1	0	1	0	1	0	1	1	1	1
1	0	0	0	1	0	1	0	1	1	0	0	0	1
1	0	0	0	1	0	1	0	1	1	0	0	1	1
1	0	0	0	1	0	1	0	1	1	0	1	0	1
1	0	0	0	1	0	1	0	1	1	0	1	1	1
1	0	0	0	1	0	1	0	1	1	1	0	0	1
1	0	0	0	1	0	1	0	1	1	1	0	1	1
1	0	0	0	1	0	1	0	1	1	1	1	0	1
1	0	0	0	1	0	1	0	1	1	1	1	1	1
1	0	0	0	1	0	1	1	0	0	0	0	0	1
1	0	0	0	1	0	1	1	0	0	0	0	1	1
1	0	0	0	1	0	1	1	0	0	0	1	0	1
1	0	0	0	1	0	1	1	0	0	0	1	1	1
1	0	0	0	1	0	1	1	0	0	1	0	0	1
1	0	0	0	1	0	1	1	0	0	1	0	1	1
1	0	0	0	1	0	1	1	0	0	1	1	0	1
1	0	0	0	1	0	1	1	0	0	1	1	1	1
1	0	0	0	1	0	1	1	0	1	0	0	0	1
1	0	0	0	1	0	1	1	0	1	0	0	1	1
1	0	0	0	1	0	1	1	0	1	0	1	0	1
1	0	0	0	1	0	1	1	0	1	0	1	1	1
1	0	0	0	1	0	1	1	0	1	1	0	0	1
1	0	0	0	1	0	1	1	0	1	1	0	1	1
1	0	0	0	1	0	1	1	0	1	1	1	0	1
1	0	0	0	1	0	1	1	0	1	1	1	1	1
1	0	0	0	1	0	1	1	1	0	0	0	0	1
1	0	0	0	1	0	1	1	1	0	0	0	1	1
1	0	0	0	1	0	1	1	1	0	0	1	0	1
1	0	0	0	1	0	1	1	1	0	0	1	1	1
1	0	0	0	1	0	1	1	1	0	1	0	0	1
1	0	0	0	1	0	1	1	1	0	1	0	1	1
1	0	0	0	1	0	1	1	1	0	1	1	0	1
1	0	0	0	1	0	1	1	1	0	1	1	1	1
1	0	0	0	1	0	1	1	1	1	0	0	0	1
1	0	0	0	1	0	1	1	1	1	0	0	1	1
1	0	0	0	1	0	1	1	1	1	0	1	0	1

1	0	0	0	1	0	1	1	1	1	0	1	1	1
1	0	0	0	1	0	1	1	1	1	1	0	0	1
1	0	0	0	1	0	1	1	1	1	1	0	1	1
1	0	0	0	1	0	1	1	1	1	1	1	0	1
1	0	0	0	1	0	1	1	1	1	1	1	1	1
1	0	0	0	1	1	0	0	0	0	0	0	0	1
1	0	0	0	1	1	0	0	0	0	0	0	1	1
1	0	0	0	1	1	0	0	0	0	0	1	0	1
1	0	0	0	1	1	0	0	0	0	0	1	1	1
1	0	0	0	1	1	0	0	0	0	1	0	0	1
1	0	0	0	1	1	0	0	0	0	1	0	1	1
1	0	0	0	1	1	0	0	0	0	1	1	0	1
1	0	0	0	1	1	0	0	0	0	1	1	1	1
1	0	0	0	1	1	0	0	0	1	0	0	0	1
1	0	0	0	1	1	0	0	0	1	0	0	1	1
1	0	0	0	1	1	0	0	0	1	0	1	0	1
1	0	0	0	1	1	0	0	0	1	0	1	1	1
1	0	0	0	1	1	0	0	0	1	1	0	0	1
1	0	0	0	1	1	0	0	0	1	1	0	1	1
1	0	0	0	1	1	0	0	0	1	1	1	0	1
1	0	0	0	1	1	0	0	0	1	1	1	1	1
1	0	0	0	1	1	0	0	1	0	0	0	0	1
1	0	0	0	1	1	0	0	1	0	0	0	1	1
1	0	0	0	1	1	0	0	1	0	0	1	0	1
1	0	0	0	1	1	0	0	1	0	0	1	1	1
1	0	0	0	1	1	0	0	1	0	1	0	0	1
1	0	0	0	1	1	0	0	1	0	1	0	1	1
1	0	0	0	1	1	0	0	1	0	1	1	0	1
1	0	0	0	1	1	0	0	1	0	1	1	1	1
1	0	0	0	1	1	0	0	1	1	0	0	0	1
1	0	0	0	1	1	0	0	1	1	0	0	1	1
1	0	0	0	1	1	0	0	1	1	0	1	0	1
1	0	0	0	1	1	0	0	1	1	0	1	1	1
1	0	0	0	1	1	0	0	1	1	1	0	0	1
1	0	0	0	1	1	0	0	1	1	1	0	1	1
1	0	0	0	1	1	0	0	1	1	1	1	0	1
1	0	0	0	1	1	0	0	1	1	1	1	1	1
1	0	0	0	1	1	0	1	0	0	0	0	0	1
1	0	0	0	1	1	0	1	0	0	0	0	1	1
1	0	0	0	1	1	0	1	0	0	0	1	0	1
1	0	0	0	1	1	0	1	0	0	0	1	1	1
1	0	0	0	1	1	0	1	0	0	1	0	0	1
1	0	0	0	1	1	0	1	0	0	1	0	1	1
1	0	0	0	1	1	0	1	0	0	1	1	0	1
1	0	0	0	1	1	0	1	0	0	1	1	1	1
1	0	0	0	1	1	0	1	0	1	0	0	0	1

1	0	0	0	1	1	0	1	0	1	0	0	1	1
1	0	0	0	1	1	0	1	0	1	0	1	0	1
1	0	0	0	1	1	0	1	0	1	0	1	1	1
1	0	0	0	1	1	0	1	0	1	1	0	0	1
1	0	0	0	1	1	0	1	0	1	1	0	1	1
1	0	0	0	1	1	0	1	0	1	1	1	0	1
1	0	0	0	1	1	0	1	0	1	1	1	1	1
1	0	0	0	1	1	0	1	1	0	0	0	0	1
1	0	0	0	1	1	0	1	1	0	0	0	1	1
1	0	0	0	1	1	0	1	1	0	0	1	0	1
1	0	0	0	1	1	0	1	1	0	0	1	1	1
1	0	0	0	1	1	0	1	1	0	1	0	0	1
1	0	0	0	1	1	0	1	1	0	1	0	1	1
1	0	0	0	1	1	0	1	1	0	1	1	0	1
1	0	0	0	1	1	0	1	1	0	1	1	1	1
1	0	0	0	1	1	0	1	1	1	0	0	0	1
1	0	0	0	1	1	0	1	1	1	0	0	1	1
1	0	0	0	1	1	0	1	1	1	0	1	0	1
1	0	0	0	1	1	0	1	1	1	0	1	1	1
1	0	0	0	1	1	0	1	1	1	1	0	0	1
1	0	0	0	1	1	0	1	1	1	1	0	1	1
1	0	0	0	1	1	0	1	1	1	1	1	0	1
1	0	0	0	1	1	0	1	1	1	1	1	1	1
1	0	0	0	1	1	1	0	0	0	0	0	0	1
1	0	0	0	1	1	1	0	0	0	0	0	1	1
1	0	0	0	1	1	1	0	0	0	0	1	0	1
1	0	0	0	1	1	1	0	0	0	0	1	1	1
1	0	0	0	1	1	1	0	0	0	1	0	0	1
1	0	0	0	1	1	1	0	0	0	1	0	1	1
1	0	0	0	1	1	1	0	0	0	1	1	0	1
1	0	0	0	1	1	1	0	0	0	1	1	1	1
1	0	0	0	1	1	1	0	0	1	0	0	0	1
1	0	0	0	1	1	1	0	0	1	0	0	1	1
1	0	0	0	1	1	1	0	0	1	0	1	0	1
1	0	0	0	1	1	1	0	0	1	0	1	1	1
1	0	0	0	1	1	1	0	0	1	1	0	0	1
1	0	0	0	1	1	1	0	0	1	1	0	1	1
1	0	0	0	1	1	1	0	0	1	1	1	0	1
1	0	0	0	1	1	1	0	0	1	1	1	1	1
1	0	0	0	1	1	1	0	1	0	0	0	0	1
1	0	0	0	1	1	1	0	1	0	0	0	1	1
1	0	0	0	1	1	1	0	1	0	0	1	0	1
1	0	0	0	1	1	1	0	1	0	0	1	1	1
1	0	0	0	1	1	1	0	1	0	1	0	0	1
1	0	0	0	1	1	1	0	1	0	1	0	1	1
1	0	0	0	1	1	1	0	1	0	1	1	0	1

1	0	0	0	1	1	1	0	1	0	1	1	1	1
1	0	0	0	1	1	1	0	1	1	0	0	0	1
1	0	0	0	1	1	1	0	1	1	0	0	1	1
1	0	0	0	1	1	1	0	1	1	0	1	0	1
1	0	0	0	1	1	1	0	1	1	0	1	1	1
1	0	0	0	1	1	1	0	1	1	1	0	0	1
1	0	0	0	1	1	1	0	1	1	1	0	1	1
1	0	0	0	1	1	1	0	1	1	1	1	0	1
1	0	0	0	1	1	1	0	1	1	1	1	1	1
1	0	0	0	1	1	1	1	0	0	1	0	0	1
1	0	0	0	1	1	1	1	0	0	0	0	1	1
1	0	0	0	1	1	1	1	0	0	0	1	0	1
1	0	0	0	1	1	1	1	0	0	0	1	1	1
1	0	0	0	1	1	1	1	0	0	0	0	0	1
1	0	0	0	1	1	1	1	0	0	1	0	1	1
1	0	0	0	1	1	1	1	0	0	1	1	0	1
1	0	0	0	1	1	1	1	0	0	1	1	1	1
1	0	0	0	1	1	1	1	0	1	1	0	0	1
1	0	0	0	1	1	1	1	0	1	0	0	1	1
1	0	0	0	1	1	1	1	0	1	0	1	0	1
1	0	0	0	1	1	1	1	0	1	0	1	1	1
1	0	0	0	1	1	1	1	0	1	0	0	0	1
1	0	0	0	1	1	1	1	0	1	1	0	1	1
1	0	0	0	1	1	1	1	0	1	1	1	0	1
1	0	0	0	1	1	1	1	0	1	1	1	1	1
1	0	0	0	1	1	1	1	1	0	1	0	0	1
1	0	0	0	1	1	1	1	1	0	0	0	1	1
1	0	0	0	1	1	1	1	1	0	0	1	0	1
1	0	0	0	1	1	1	1	1	0	0	1	1	1
1	0	0	0	1	1	1	1	1	0	0	0	0	1
1	0	0	0	1	1	1	1	1	0	1	0	1	1
1	0	0	0	1	1	1	1	1	0	1	1	0	1
1	0	0	0	1	1	1	1	1	0	1	1	1	1
1	0	0	0	1	1	1	1	1	1	1	0	0	1
1	0	0	0	1	1	1	1	1	1	0	0	1	1
1	0	0	0	1	1	1	1	1	1	0	1	0	1
1	0	0	0	1	1	1	1	1	1	0	1	1	1
1	0	0	0	1	1	1	1	1	1	0	0	0	1
1	0	0	0	1	1	1	1	1	1	1	0	1	1
1	0	0	0	1	1	1	1	1	1	1	1	0	1
1	0	0	0	1	1	1	1	1	1	1	1	1	1
1	0	0	1	0	0	0	0	0	0	0	0	0	1
1	0	0	1	0	0	0	0	0	0	0	0	1	1
1	0	0	1	0	0	0	0	0	0	0	1	0	1
1	0	0	1	0	0	0	0	0	0	0	1	1	1
1	0	0	1	0	0	0	0	0	0	1	0	0	1

1	0	0	1	0	0	0	0	0	0	1	0	1	1
1	0	0	1	0	0	0	0	0	0	1	1	0	1
1	0	0	1	0	0	0	0	0	0	1	1	1	1
1	0	0	1	0	0	0	0	0	1	0	0	0	1
1	0	0	1	0	0	0	0	0	1	0	0	1	1
1	0	0	1	0	0	0	0	0	1	0	1	0	1
1	0	0	1	0	0	0	0	0	1	0	1	1	1
1	0	0	1	0	0	0	0	0	1	1	0	0	1
1	0	0	1	0	0	0	0	0	1	1	0	1	1
1	0	0	1	0	0	0	0	0	1	1	1	0	1
1	0	0	1	0	0	0	0	0	1	1	1	1	1
1	0	0	1	0	0	0	0	1	0	0	0	0	1
1	0	0	1	0	0	0	0	1	0	0	0	1	1
1	0	0	1	0	0	0	0	1	0	0	1	0	1
1	0	0	1	0	0	0	0	1	0	0	1	1	1
1	0	0	1	0	0	0	0	1	0	1	0	0	1
1	0	0	1	0	0	0	0	1	0	1	0	1	1
1	0	0	1	0	0	0	0	1	0	1	1	0	1
1	0	0	1	0	0	0	0	1	0	1	1	1	1
1	0	0	1	0	0	0	0	1	1	0	0	0	1
1	0	0	1	0	0	0	0	1	1	0	0	1	1
1	0	0	1	0	0	0	0	1	1	0	1	0	1
1	0	0	1	0	0	0	0	1	1	0	1	1	1
1	0	0	1	0	0	0	0	1	1	1	0	0	1
1	0	0	1	0	0	0	0	1	1	1	0	1	1
1	0	0	1	0	0	0	0	1	1	1	1	0	1
1	0	0	1	0	0	0	0	1	1	1	1	1	1
1	0	0	1	0	0	0	1	0	0	0	0	0	1
1	0	0	1	0	0	0	1	0	0	0	0	1	1
1	0	0	1	0	0	0	1	0	0	0	1	0	1
1	0	0	1	0	0	0	1	0	0	0	1	1	1
1	0	0	1	0	0	0	1	0	0	1	0	0	1
1	0	0	1	0	0	0	1	0	0	1	0	1	1
1	0	0	1	0	0	0	1	0	0	1	1	0	1
1	0	0	1	0	0	0	1	0	0	1	1	1	1
1	0	0	1	0	0	0	1	0	1	0	0	0	1
1	0	0	1	0	0	0	1	0	1	0	0	1	1
1	0	0	1	0	0	0	1	0	1	0	1	0	1
1	0	0	1	0	0	0	1	0	1	0	1	1	1
1	0	0	1	0	0	0	1	0	1	1	0	0	1
1	0	0	1	0	0	0	1	0	1	1	0	1	1
1	0	0	1	0	0	0	1	0	1	1	1	0	1
1	0	0	1	0	0	0	1	0	1	1	1	1	1
1	0	0	1	0	0	0	1	1	0	0	0	0	1
1	0	0	1	0	0	0	1	1	0	0	0	1	1
1	0	0	1	0	0	0	1	1	0	0	1	0	1

1	0	0	1	0	0	0	1	1	0	0	1	1	1
1	0	0	1	0	0	0	1	1	0	1	0	0	1
1	0	0	1	0	0	0	1	1	0	1	0	1	1
1	0	0	1	0	0	0	1	1	0	1	1	0	1
1	0	0	1	0	0	0	1	1	0	1	1	1	1
1	0	0	1	0	0	0	1	1	1	0	0	0	1
1	0	0	1	0	0	0	1	1	1	0	0	1	1
1	0	0	1	0	0	0	1	1	1	0	1	0	1
1	0	0	1	0	0	0	1	1	1	0	1	1	1
1	0	0	1	0	0	0	1	1	1	1	0	0	1
1	0	0	1	0	0	0	1	1	1	1	0	1	1
1	0	0	1	0	0	0	1	1	1	1	1	0	1
1	0	0	1	0	0	0	1	1	1	1	1	1	1
1	0	0	1	0	0	1	0	0	0	0	0	0	1
1	0	0	1	0	0	1	0	0	0	0	0	1	1
1	0	0	1	0	0	1	0	0	0	0	1	0	1
1	0	0	1	0	0	1	0	0	0	0	1	1	1
1	0	0	1	0	0	1	0	0	0	1	0	0	1
1	0	0	1	0	0	1	0	0	0	1	0	1	1
1	0	0	1	0	0	1	0	0	0	1	1	0	1
1	0	0	1	0	0	1	0	0	0	1	1	1	1
1	0	0	1	0	0	1	0	0	1	0	0	0	1
1	0	0	1	0	0	1	0	0	1	0	0	1	1
1	0	0	1	0	0	1	0	0	1	0	1	0	1
1	0	0	1	0	0	1	0	0	1	0	1	1	1
1	0	0	1	0	0	1	0	0	1	1	0	0	1
1	0	0	1	0	0	1	0	0	1	1	0	1	1
1	0	0	1	0	0	1	0	0	1	1	1	0	1
1	0	0	1	0	0	1	0	0	1	1	1	1	1
1	0	0	1	0	0	1	0	1	0	0	0	0	1
1	0	0	1	0	0	1	0	1	0	0	0	1	1
1	0	0	1	0	0	1	0	1	0	0	1	0	1
1	0	0	1	0	0	1	0	1	0	0	1	1	1
1	0	0	1	0	0	1	0	1	0	1	0	0	1
1	0	0	1	0	0	1	0	1	0	1	0	1	1
1	0	0	1	0	0	1	0	1	0	1	1	0	1
1	0	0	1	0	0	1	0	1	0	1	1	1	1
1	0	0	1	0	0	1	0	1	1	0	0	0	1
1	0	0	1	0	0	1	0	1	1	0	0	1	1
1	0	0	1	0	0	1	0	1	1	0	1	0	1
1	0	0	1	0	0	1	0	1	1	0	1	1	1
1	0	0	1	0	0	1	0	1	1	1	0	0	1
1	0	0	1	0	0	1	0	1	1	1	0	1	1
1	0	0	1	0	0	1	0	1	1	1	1	0	1
1	0	0	1	0	0	1	0	1	1	1	1	1	1
1	0	0	1	0	0	1	1	0	0	0	0	0	1

1	0	0	1	0	0	1	1	0	0	0	0	1	1
1	0	0	1	0	0	1	1	0	0	0	1	0	1
1	0	0	1	0	0	1	1	0	0	0	1	1	1
1	0	0	1	0	0	1	1	0	0	1	0	0	1
1	0	0	1	0	0	1	1	0	0	1	0	1	1
1	0	0	1	0	0	1	1	0	0	1	1	0	1
1	0	0	1	0	0	1	1	0	0	1	1	1	1
1	0	0	1	0	0	1	1	0	1	0	0	0	1
1	0	0	1	0	0	1	1	0	1	0	0	1	1
1	0	0	1	0	0	1	1	0	1	0	1	0	1
1	0	0	1	0	0	1	1	0	1	0	1	1	1
1	0	0	1	0	0	1	1	0	1	1	0	0	1
1	0	0	1	0	0	1	1	0	1	1	0	1	1
1	0	0	1	0	0	1	1	0	1	1	1	0	1
1	0	0	1	0	0	1	1	0	1	1	1	1	1
1	0	0	1	0	0	1	1	1	0	0	0	0	1
1	0	0	1	0	0	1	1	1	0	0	0	1	1
1	0	0	1	0	0	1	1	1	0	0	1	0	1
1	0	0	1	0	0	1	1	1	0	0	1	1	1
1	0	0	1	0	0	1	1	1	0	1	0	0	1
1	0	0	1	0	0	1	1	1	0	1	0	1	1
1	0	0	1	0	0	1	1	1	0	1	1	0	1
1	0	0	1	0	0	1	1	1	0	1	1	1	1
1	0	0	1	0	0	1	1	1	1	0	0	0	1
1	0	0	1	0	0	1	1	1	1	0	0	1	1
1	0	0	1	0	0	1	1	1	1	0	1	0	1
1	0	0	1	0	0	1	1	1	1	0	1	1	1
1	0	0	1	0	0	1	1	1	1	1	0	0	1
1	0	0	1	0	0	1	1	1	1	1	0	1	1
1	0	0	1	0	0	1	1	1	1	1	1	0	1
1	0	0	1	0	0	1	1	1	1	1	1	1	1
1	0	0	1	0	1	0	0	0	0	0	0	0	1
1	0	0	1	0	1	0	0	0	0	0	0	1	1
1	0	0	1	0	1	0	0	0	0	0	1	0	1
1	0	0	1	0	1	0	0	0	0	0	1	1	1
1	0	0	1	0	1	0	0	0	0	1	0	0	1
1	0	0	1	0	1	0	0	0	0	1	0	1	1
1	0	0	1	0	1	0	0	0	0	1	1	0	1
1	0	0	1	0	1	0	0	0	0	1	1	1	1
1	0	0	1	0	1	0	0	0	1	0	0	0	1
1	0	0	1	0	1	0	0	0	1	0	0	1	1
1	0	0	1	0	1	0	0	0	1	0	1	0	1
1	0	0	1	0	1	0	0	0	1	0	1	1	1
1	0	0	1	0	1	0	0	0	1	1	0	0	1
1	0	0	1	0	1	0	0	0	1	1	0	1	1
1	0	0	1	0	1	0	0	0	1	1	1	0	1

1	0	0	1	0	1	0	0	0	1	1	1	1	1
1	0	0	1	0	1	0	0	1	0	0	0	0	1
1	0	0	1	0	1	0	0	1	0	0	0	1	1
1	0	0	1	0	1	0	0	1	0	0	1	0	1
1	0	0	1	0	1	0	0	1	0	0	1	1	1
1	0	0	1	0	1	0	0	1	0	1	0	0	1
1	0	0	1	0	1	0	0	1	0	1	0	1	1
1	0	0	1	0	1	0	0	1	0	1	1	0	1
1	0	0	1	0	1	0	0	1	0	1	1	1	1
1	0	0	1	0	1	0	0	1	1	0	0	0	1
1	0	0	1	0	1	0	0	1	1	0	0	1	1
1	0	0	1	0	1	0	0	1	1	0	1	0	1
1	0	0	1	0	1	0	0	1	1	0	1	1	1
1	0	0	1	0	1	0	0	1	1	1	0	0	1
1	0	0	1	0	1	0	0	1	1	1	0	1	1
1	0	0	1	0	1	0	0	1	1	1	1	0	1
1	0	0	1	0	1	0	0	1	1	1	1	1	1
1	0	0	1	0	1	0	1	0	0	0	0	0	1
1	0	0	1	0	1	0	1	0	0	0	0	1	1
1	0	0	1	0	1	0	1	0	0	0	1	0	1
1	0	0	1	0	1	0	1	0	0	0	1	1	1
1	0	0	1	0	1	0	1	0	0	1	0	0	1
1	0	0	1	0	1	0	1	0	0	1	0	1	1
1	0	0	1	0	1	0	1	0	0	1	1	0	1
1	0	0	1	0	1	0	1	0	0	1	1	1	1
1	0	0	1	0	1	0	1	0	1	0	0	0	1
1	0	0	1	0	1	0	1	0	1	0	0	1	1
1	0	0	1	0	1	0	1	0	1	0	1	0	1
1	0	0	1	0	1	0	1	0	1	0	1	1	1
1	0	0	1	0	1	0	1	0	1	1	0	0	1
1	0	0	1	0	1	0	1	0	1	1	0	1	1
1	0	0	1	0	1	0	1	0	1	1	1	0	1
1	0	0	1	0	1	0	1	0	1	1	1	1	1
1	0	0	1	0	1	0	1	1	0	0	0	0	1
1	0	0	1	0	1	0	1	1	0	0	0	1	1
1	0	0	1	0	1	0	1	1	0	0	1	0	1
1	0	0	1	0	1	0	1	1	0	0	1	1	1
1	0	0	1	0	1	0	1	1	0	1	0	0	1
1	0	0	1	0	1	0	1	1	0	1	0	1	1
1	0	0	1	0	1	0	1	1	0	1	1	0	1
1	0	0	1	0	1	0	1	1	0	1	1	1	1
1	0	0	1	0	1	0	1	1	1	0	0	0	1
1	0	0	1	0	1	0	1	1	1	0	0	1	1
1	0	0	1	0	1	0	1	1	1	0	1	0	1
1	0	0	1	0	1	0	1	1	1	0	1	1	1
1	0	0	1	0	1	0	1	1	1	1	0	0	1

1	0	0	1	0	1	0	1	1	1	1	0	1	1
1	0	0	1	0	1	0	1	1	1	1	1	0	1
1	0	0	1	0	1	0	1	1	1	1	1	1	1
1	0	0	1	0	1	1	0	0	0	0	0	0	1
1	0	0	1	0	1	1	0	0	0	0	0	1	1
1	0	0	1	0	1	1	0	0	0	0	1	0	1
1	0	0	1	0	1	1	0	0	0	0	1	1	1
1	0	0	1	0	1	1	0	0	0	1	0	0	1
1	0	0	1	0	1	1	0	0	0	1	0	1	1
1	0	0	1	0	1	1	0	0	0	1	1	0	1
1	0	0	1	0	1	1	0	0	0	1	1	1	1
1	0	0	1	0	1	1	0	0	1	0	0	0	1
1	0	0	1	0	1	1	0	0	1	0	0	1	1
1	0	0	1	0	1	1	0	0	1	0	1	0	1
1	0	0	1	0	1	1	0	0	1	0	1	1	1
1	0	0	1	0	1	1	0	0	1	1	0	0	1
1	0	0	1	0	1	1	0	0	1	1	0	1	1
1	0	0	1	0	1	1	0	0	1	1	1	0	1
1	0	0	1	0	1	1	0	0	1	1	1	1	1
1	0	0	1	0	1	1	0	1	0	0	0	0	1
1	0	0	1	0	1	1	0	1	0	0	0	1	1
1	0	0	1	0	1	1	0	1	0	0	1	0	1
1	0	0	1	0	1	1	0	1	0	0	1	1	1
1	0	0	1	0	1	1	0	1	0	1	0	0	1
1	0	0	1	0	1	1	0	1	0	1	0	1	1
1	0	0	1	0	1	1	0	1	0	1	1	0	1
1	0	0	1	0	1	1	0	1	0	1	1	1	1
1	0	0	1	0	1	1	0	1	1	0	0	0	1
1	0	0	1	0	1	1	0	1	1	0	0	1	1
1	0	0	1	0	1	1	0	1	1	0	1	0	1
1	0	0	1	0	1	1	0	1	1	0	1	1	1
1	0	0	1	0	1	1	0	1	1	1	0	0	1
1	0	0	1	0	1	1	0	1	1	1	0	1	1
1	0	0	1	0	1	1	0	1	1	1	1	0	1
1	0	0	1	0	1	1	0	1	1	1	1	1	1
1	0	0	1	0	1	1	1	0	0	1	0	0	1
1	0	0	1	0	1	1	1	0	0	0	0	1	1
1	0	0	1	0	1	1	1	0	0	0	1	0	1
1	0	0	1	0	1	1	1	0	0	0	1	1	1
1	0	0	1	0	1	1	1	0	0	0	0	0	1
1	0	0	1	0	1	1	1	0	0	1	0	1	1
1	0	0	1	0	1	1	1	0	0	1	1	0	1
1	0	0	1	0	1	1	1	0	0	1	1	1	1
1	0	0	1	0	1	1	1	0	1	1	0	0	1
1	0	0	1	0	1	1	1	0	1	0	0	1	1
1	0	0	1	0	1	1	1	0	1	0	1	0	1

1	0	0	1	0	1	1	1	0	1	0	1	1	1
1	0	0	1	0	1	1	1	0	1	0	0	0	1
1	0	0	1	0	1	1	1	0	1	1	0	1	1
1	0	0	1	0	1	1	1	0	1	1	1	0	1
1	0	0	1	0	1	1	1	0	1	1	1	1	1
1	0	0	1	0	1	1	1	1	0	1	0	0	1
1	0	0	1	0	1	1	1	1	0	0	0	1	1
1	0	0	1	0	1	1	1	1	0	0	1	0	1
1	0	0	1	0	1	1	1	1	0	0	1	1	1
1	0	0	1	0	1	1	1	1	0	0	0	0	1
1	0	0	1	0	1	1	1	1	0	1	0	1	1
1	0	0	1	0	1	1	1	1	0	1	1	0	1
1	0	0	1	0	1	1	1	1	0	1	1	1	1
1	0	0	1	0	1	1	1	1	1	1	0	0	1
1	0	0	1	0	1	1	1	1	1	0	0	1	1
1	0	0	1	0	1	1	1	1	1	0	1	0	1
1	0	0	1	0	1	1	1	1	1	0	1	1	1
1	0	0	1	0	1	1	1	1	1	0	0	0	1
1	0	0	1	0	1	1	1	1	1	1	0	1	1
1	0	0	1	0	1	1	1	1	1	1	1	0	1
1	0	0	1	0	1	1	1	1	1	1	1	1	1
1	0	0	1	1	0	0	0	0	0	0	0	0	1
1	0	0	1	1	0	0	0	0	0	0	0	1	1
1	0	0	1	1	0	0	0	0	0	0	1	0	1
1	0	0	1	1	0	0	0	0	0	0	1	1	1
1	0	0	1	1	0	0	0	0	0	1	0	0	1
1	0	0	1	1	0	0	0	0	0	1	0	1	1
1	0	0	1	1	0	0	0	0	0	1	1	0	1
1	0	0	1	1	0	0	0	0	0	1	1	1	1
1	0	0	1	1	0	0	0	0	1	0	0	0	1
1	0	0	1	1	0	0	0	0	1	0	0	1	1
1	0	0	1	1	0	0	0	0	1	0	1	0	1
1	0	0	1	1	0	0	0	0	1	0	1	1	1
1	0	0	1	1	0	0	0	0	1	1	0	0	1
1	0	0	1	1	0	0	0	0	1	1	0	1	1
1	0	0	1	1	0	0	0	0	1	1	1	0	1
1	0	0	1	1	0	0	0	0	1	1	1	1	1
1	0	0	1	1	0	0	0	1	0	0	0	0	1
1	0	0	1	1	0	0	0	1	0	0	0	1	1
1	0	0	1	1	0	0	0	1	0	0	1	0	1
1	0	0	1	1	0	0	0	1	0	0	1	1	1
1	0	0	1	1	0	0	0	1	0	1	0	0	1
1	0	0	1	1	0	0	0	1	0	1	0	1	1
1	0	0	1	1	0	0	0	1	0	1	1	0	1
1	0	0	1	1	0	0	0	1	0	1	1	1	1
1	0	0	1	1	0	0	0	1	1	0	0	0	1

1	0	0	1	1	0	0	0	1	1	0	0	1	1
1	0	0	1	1	0	0	0	1	1	0	1	0	1
1	0	0	1	1	0	0	0	1	1	0	1	1	1
1	0	0	1	1	0	0	0	1	1	1	0	0	1
1	0	0	1	1	0	0	0	1	1	1	0	1	1
1	0	0	1	1	0	0	0	1	1	1	1	0	1
1	0	0	1	1	0	0	0	1	1	1	1	1	1
1	0	0	1	1	0	0	1	0	0	0	0	0	1
1	0	0	1	1	0	0	1	0	0	0	0	1	1
1	0	0	1	1	0	0	1	0	0	0	1	0	1
1	0	0	1	1	0	0	1	0	0	0	1	1	1
1	0	0	1	1	0	0	1	0	0	1	0	0	1
1	0	0	1	1	0	0	1	0	0	1	0	1	1
1	0	0	1	1	0	0	1	0	0	1	1	0	1
1	0	0	1	1	0	0	1	0	0	1	1	1	1
1	0	0	1	1	0	0	1	0	1	0	0	0	1
1	0	0	1	1	0	0	1	0	1	0	0	1	1
1	0	0	1	1	0	0	1	0	1	0	1	0	1
1	0	0	1	1	0	0	1	0	1	0	1	1	1
1	0	0	1	1	0	0	1	0	1	1	0	0	1
1	0	0	1	1	0	0	1	0	1	1	0	1	1
1	0	0	1	1	0	0	1	0	1	1	1	0	1
1	0	0	1	1	0	0	1	0	1	1	1	1	1
1	0	0	1	1	0	0	1	1	0	0	0	0	1
1	0	0	1	1	0	0	1	1	0	0	0	1	1
1	0	0	1	1	0	0	1	1	0	0	1	0	1
1	0	0	1	1	0	0	1	1	0	0	1	1	1
1	0	0	1	1	0	0	1	1	0	1	0	0	1
1	0	0	1	1	0	0	1	1	0	1	0	1	1
1	0	0	1	1	0	0	1	1	0	1	1	0	1
1	0	0	1	1	0	0	1	1	0	1	1	1	1
1	0	0	1	1	0	0	1	1	1	0	0	0	1
1	0	0	1	1	0	0	1	1	1	0	0	1	1
1	0	0	1	1	0	0	1	1	1	0	1	0	1
1	0	0	1	1	0	0	1	1	1	0	1	1	1
1	0	0	1	1	0	0	1	1	1	1	0	0	1
1	0	0	1	1	0	0	1	1	1	1	0	1	1
1	0	0	1	1	0	0	1	1	1	1	1	0	1
1	0	0	1	1	0	0	1	1	1	1	1	1	1
1	0	0	1	1	0	1	0	0	0	0	0	0	1
1	0	0	1	1	0	1	0	0	0	0	0	1	1
1	0	0	1	1	0	1	0	0	0	0	1	0	1
1	0	0	1	1	0	1	0	0	0	0	1	1	1
1	0	0	1	1	0	1	0	0	0	1	0	0	1
1	0	0	1	1	0	1	0	0	0	1	0	1	1
1	0	0	1	1	0	1	0	0	0	1	1	0	1

1	0	0	1	1	0	1	0	0	0	1	1	1	1
1	0	0	1	1	0	1	0	0	1	0	0	0	1
1	0	0	1	1	0	1	0	0	1	0	0	1	1
1	0	0	1	1	0	1	0	0	1	0	1	0	1
1	0	0	1	1	0	1	0	0	1	0	1	1	1
1	0	0	1	1	0	1	0	0	1	1	0	0	1
1	0	0	1	1	0	1	0	0	1	1	0	1	1
1	0	0	1	1	0	1	0	0	1	1	1	0	1
1	0	0	1	1	0	1	0	0	1	1	1	1	1
1	0	0	1	1	0	1	0	1	0	0	0	0	1
1	0	0	1	1	0	1	0	1	0	0	0	1	1
1	0	0	1	1	0	1	0	1	0	0	1	0	1
1	0	0	1	1	0	1	0	1	0	0	1	1	1
1	0	0	1	1	0	1	0	1	0	1	0	0	1
1	0	0	1	1	0	1	0	1	0	1	0	1	1
1	0	0	1	1	0	1	0	1	0	1	1	0	1
1	0	0	1	1	0	1	0	1	0	1	1	1	1
1	0	0	1	1	0	1	0	1	1	0	0	0	1
1	0	0	1	1	0	1	0	1	1	0	0	1	1
1	0	0	1	1	0	1	0	1	1	0	1	0	1
1	0	0	1	1	0	1	0	1	1	0	1	1	1
1	0	0	1	1	0	1	0	1	1	1	0	0	1
1	0	0	1	1	0	1	0	1	1	1	0	1	1
1	0	0	1	1	0	1	0	1	1	1	1	0	1
1	0	0	1	1	0	1	0	1	1	1	1	1	1
1	0	0	1	1	0	1	1	0	0	0	0	0	1
1	0	0	1	1	0	1	1	0	0	0	0	1	1
1	0	0	1	1	0	1	1	0	0	0	1	0	1
1	0	0	1	1	0	1	1	0	0	0	1	1	1
1	0	0	1	1	0	1	1	0	0	1	0	0	1
1	0	0	1	1	0	1	1	0	0	1	0	1	1
1	0	0	1	1	0	1	1	0	0	1	1	0	1
1	0	0	1	1	0	1	1	0	0	1	1	1	1
1	0	0	1	1	0	1	1	0	1	0	0	0	1
1	0	0	1	1	0	1	1	0	1	0	0	1	1
1	0	0	1	1	0	1	1	0	1	0	1	0	1
1	0	0	1	1	0	1	1	0	1	0	1	1	1
1	0	0	1	1	0	1	1	0	1	1	0	0	1
1	0	0	1	1	0	1	1	0	1	1	0	1	1
1	0	0	1	1	0	1	1	0	1	1	1	0	1
1	0	0	1	1	0	1	1	0	1	1	1	1	1
1	0	0	1	1	0	1	1	1	0	0	0	0	1
1	0	0	1	1	0	1	1	1	0	0	0	1	1
1	0	0	1	1	0	1	1	1	0	0	1	0	1
1	0	0	1	1	0	1	1	1	0	0	1	1	1
1	0	0	1	1	0	1	1	1	0	1	0	0	1

1	0	0	1	1	0	1	1	1	0	1	0	1	1
1	0	0	1	1	0	1	1	1	0	1	1	0	1
1	0	0	1	1	0	1	1	1	0	1	1	1	1
1	0	0	1	1	0	1	1	1	1	0	0	0	1
1	0	0	1	1	0	1	1	1	1	0	0	1	1
1	0	0	1	1	0	1	1	1	1	0	1	0	1
1	0	0	1	1	0	1	1	1	1	0	1	1	1
1	0	0	1	1	0	1	1	1	1	1	0	0	1
1	0	0	1	1	0	1	1	1	1	1	0	1	1
1	0	0	1	1	0	1	1	1	1	1	1	0	1
1	0	0	1	1	0	1	1	1	1	1	1	1	1
1	0	0	1	1	1	0	0	0	0	0	0	0	1
1	0	0	1	1	1	0	0	0	0	0	0	1	1
1	0	0	1	1	1	0	0	0	0	0	1	0	1
1	0	0	1	1	1	0	0	0	0	0	1	1	1
1	0	0	1	1	1	0	0	0	0	1	0	0	1
1	0	0	1	1	1	0	0	0	0	1	0	1	1
1	0	0	1	1	1	0	0	0	0	1	1	0	1
1	0	0	1	1	1	0	0	0	0	1	1	1	1
1	0	0	1	1	1	0	0	0	1	0	0	0	1
1	0	0	1	1	1	0	0	0	1	0	0	1	1
1	0	0	1	1	1	0	0	0	1	0	1	0	1
1	0	0	1	1	1	0	0	0	1	0	1	1	1
1	0	0	1	1	1	0	0	0	1	1	0	0	1
1	0	0	1	1	1	0	0	0	1	1	0	1	1
1	0	0	1	1	1	0	0	0	1	1	1	0	1
1	0	0	1	1	1	0	0	0	1	1	1	1	1
1	0	0	1	1	1	0	0	1	0	0	0	0	1
1	0	0	1	1	1	0	0	1	0	0	0	1	1
1	0	0	1	1	1	0	0	1	0	0	1	0	1
1	0	0	1	1	1	0	0	1	0	0	1	1	1
1	0	0	1	1	1	0	0	1	0	1	0	0	1
1	0	0	1	1	1	0	0	1	0	1	0	1	1
1	0	0	1	1	1	0	0	1	0	1	1	0	1
1	0	0	1	1	1	0	0	1	0	1	1	1	1
1	0	0	1	1	1	0	0	1	1	0	0	0	1
1	0	0	1	1	1	0	0	1	1	0	0	1	1
1	0	0	1	1	1	0	0	1	1	0	1	0	1
1	0	0	1	1	1	0	0	1	1	0	1	1	1
1	0	0	1	1	1	0	0	1	1	1	0	0	1
1	0	0	1	1	1	0	0	1	1	1	0	1	1
1	0	0	1	1	1	0	0	1	1	1	1	0	1
1	0	0	1	1	1	0	0	1	1	1	1	1	1
1	0	0	1	1	1	0	1	0	0	0	0	0	1
1	0	0	1	1	1	0	1	0	0	0	0	1	1
1	0	0	1	1	1	0	1	0	0	0	1	0	1

1	0	0	1	1	1	0	1	0	0	0	1	1	1
1	0	0	1	1	1	0	1	0	0	1	0	0	1
1	0	0	1	1	1	0	1	0	0	1	0	1	1
1	0	0	1	1	1	0	1	0	0	1	1	0	1
1	0	0	1	1	1	0	1	0	0	1	1	1	1
1	0	0	1	1	1	0	1	0	1	0	0	0	1
1	0	0	1	1	1	0	1	0	1	0	0	1	1
1	0	0	1	1	1	0	1	0	1	0	1	0	1
1	0	0	1	1	1	0	1	0	1	0	1	1	1
1	0	0	1	1	1	0	1	0	1	1	0	0	1
1	0	0	1	1	1	0	1	0	1	1	0	1	1
1	0	0	1	1	1	0	1	0	1	1	1	0	1
1	0	0	1	1	1	0	1	0	1	1	1	1	1
1	0	0	1	1	1	0	1	1	0	0	0	0	1
1	0	0	1	1	1	0	1	1	0	0	0	1	1
1	0	0	1	1	1	0	1	1	0	0	1	0	1
1	0	0	1	1	1	0	1	1	0	0	1	1	1
1	0	0	1	1	1	0	1	1	0	1	0	0	1
1	0	0	1	1	1	0	1	1	0	1	0	1	1
1	0	0	1	1	1	0	1	1	0	1	1	0	1
1	0	0	1	1	1	0	1	1	0	1	1	1	1
1	0	0	1	1	1	0	1	1	1	0	0	0	1
1	0	0	1	1	1	0	1	1	1	0	0	1	1
1	0	0	1	1	1	0	1	1	1	0	1	0	1
1	0	0	1	1	1	0	1	1	1	0	1	1	1
1	0	0	1	1	1	0	1	1	1	1	0	0	1
1	0	0	1	1	1	0	1	1	1	1	0	1	1
1	0	0	1	1	1	0	1	1	1	1	1	0	1
1	0	0	1	1	1	0	1	1	1	1	1	1	1
1	0	0	1	1	1	1	0	0	0	0	0	0	1
1	0	0	1	1	1	1	0	0	0	0	0	1	1
1	0	0	1	1	1	1	0	0	0	0	1	0	1
1	0	0	1	1	1	1	0	0	0	0	1	1	1
1	0	0	1	1	1	1	0	0	0	1	0	0	1
1	0	0	1	1	1	1	0	0	0	1	0	1	1
1	0	0	1	1	1	1	0	0	0	1	1	0	1
1	0	0	1	1	1	1	0	0	0	1	1	1	1
1	0	0	1	1	1	1	0	0	1	0	0	0	1
1	0	0	1	1	1	1	0	0	1	0	0	1	1
1	0	0	1	1	1	1	0	0	1	0	1	0	1
1	0	0	1	1	1	1	0	0	1	0	1	1	1
1	0	0	1	1	1	1	0	0	1	1	0	0	1
1	0	0	1	1	1	1	0	0	1	1	0	1	1
1	0	0	1	1	1	1	0	0	1	1	1	0	1
1	0	0	1	1	1	1	0	0	1	1	1	1	1
1	0	0	1	1	1	1	0	1	0	0	0	0	1

1	0	0	1	1	1	1	0	1	0	0	0	1	1
1	0	0	1	1	1	1	0	1	0	0	1	0	1
1	0	0	1	1	1	1	0	1	0	0	1	1	1
1	0	0	1	1	1	1	0	1	0	1	0	0	1
1	0	0	1	1	1	1	0	1	0	1	0	1	1
1	0	0	1	1	1	1	0	1	0	1	1	0	1
1	0	0	1	1	1	1	0	1	0	1	1	1	1
1	0	0	1	1	1	1	0	1	1	0	0	0	1
1	0	0	1	1	1	1	0	1	1	0	0	1	1
1	0	0	1	1	1	1	0	1	1	0	1	0	1
1	0	0	1	1	1	1	0	1	1	0	1	1	1
1	0	0	1	1	1	1	0	1	1	1	0	0	1
1	0	0	1	1	1	1	0	1	1	1	0	1	1
1	0	0	1	1	1	1	0	1	1	1	1	0	1
1	0	0	1	1	1	1	0	1	1	1	1	1	1
1	0	0	1	1	1	1	1	0	0	1	0	0	1
1	0	0	1	1	1	1	1	0	0	0	0	1	1
1	0	0	1	1	1	1	1	0	0	0	1	0	1
1	0	0	1	1	1	1	1	0	0	0	1	1	1
1	0	0	1	1	1	1	1	0	0	0	0	0	1
1	0	0	1	1	1	1	1	0	0	1	0	1	1
1	0	0	1	1	1	1	1	0	0	1	1	0	1
1	0	0	1	1	1	1	1	0	0	1	1	1	1
1	0	0	1	1	1	1	1	0	1	1	0	0	1
1	0	0	1	1	1	1	1	0	1	0	0	1	1
1	0	0	1	1	1	1	1	0	1	0	1	0	1
1	0	0	1	1	1	1	1	0	1	0	1	1	1
1	0	0	1	1	1	1	1	0	1	0	0	0	1
1	0	0	1	1	1	1	1	0	1	1	0	1	1
1	0	0	1	1	1	1	1	0	1	1	1	0	1
1	0	0	1	1	1	1	1	0	1	1	1	1	1
1	0	0	1	1	1	1	1	1	0	1	0	0	1
1	0	0	1	1	1	1	1	1	0	0	0	1	1
1	0	0	1	1	1	1	1	1	0	0	1	0	1
1	0	0	1	1	1	1	1	1	0	0	1	1	1
1	0	0	1	1	1	1	1	1	0	0	0	0	1
1	0	0	1	1	1	1	1	1	0	1	0	1	1
1	0	0	1	1	1	1	1	1	0	1	1	0	1
1	0	0	1	1	1	1	1	1	0	1	1	1	1
1	0	0	1	1	1	1	1	1	1	1	0	0	1
1	0	0	1	1	1	1	1	1	1	0	0	1	1
1	0	0	1	1	1	1	1	1	1	0	1	0	1
1	0	0	1	1	1	1	1	1	1	0	1	1	1
1	0	0	1	1	1	1	1	1	1	0	0	0	1
1	0	0	1	1	1	1	1	1	1	1	0	1	1
1	0	0	1	1	1	1	1	1	1	1	1	0	1

1	0	0	1	1	1	1	1	1	1	1	1	1	1
1	0	1	0	0	0	0	0	0	0	0	0	0	1
1	0	1	0	0	0	0	0	0	0	0	0	1	1
1	0	1	0	0	0	0	0	0	0	0	1	0	1
1	0	1	0	0	0	0	0	0	0	0	1	1	1
1	0	1	0	0	0	0	0	0	0	1	0	0	1
1	0	1	0	0	0	0	0	0	0	1	0	1	1
1	0	1	0	0	0	0	0	0	0	1	1	0	1
1	0	1	0	0	0	0	0	0	0	1	1	1	1
1	0	1	0	0	0	0	0	0	1	0	0	0	1
1	0	1	0	0	0	0	0	0	1	0	0	1	1
1	0	1	0	0	0	0	0	0	1	0	1	0	1
1	0	1	0	0	0	0	0	0	1	0	1	1	1
1	0	1	0	0	0	0	0	0	1	1	0	0	1
1	0	1	0	0	0	0	0	0	1	1	0	1	1
1	0	1	0	0	0	0	0	0	1	1	1	0	1
1	0	1	0	0	0	0	0	0	1	1	1	1	1
1	0	1	0	0	0	0	0	1	0	0	0	0	1
1	0	1	0	0	0	0	0	1	0	0	0	1	1
1	0	1	0	0	0	0	0	1	0	0	1	0	1
1	0	1	0	0	0	0	0	1	0	0	1	1	1
1	0	1	0	0	0	0	0	1	0	1	0	0	1
1	0	1	0	0	0	0	0	1	0	1	0	1	1
1	0	1	0	0	0	0	0	1	0	1	1	0	1
1	0	1	0	0	0	0	0	1	0	1	1	1	1
1	0	1	0	0	0	0	0	1	1	0	0	0	1
1	0	1	0	0	0	0	0	1	1	0	0	1	1
1	0	1	0	0	0	0	0	1	1	0	1	0	1
1	0	1	0	0	0	0	0	1	1	0	1	1	1
1	0	1	0	0	0	0	0	1	1	1	0	0	1
1	0	1	0	0	0	0	0	1	1	1	0	1	1
1	0	1	0	0	0	0	0	1	1	1	1	0	1
1	0	1	0	0	0	0	0	1	1	1	1	1	1
1	0	1	0	0	0	0	1	0	0	0	0	0	1
1	0	1	0	0	0	0	1	0	0	0	0	1	1
1	0	1	0	0	0	0	1	0	0	0	1	0	1
1	0	1	0	0	0	0	1	0	0	0	1	1	1
1	0	1	0	0	0	0	1	0	0	1	0	0	1
1	0	1	0	0	0	0	1	0	0	1	0	1	1
1	0	1	0	0	0	0	1	0	0	1	1	0	1
1	0	1	0	0	0	0	1	0	0	1	1	1	1
1	0	1	0	0	0	0	1	0	1	0	0	0	1
1	0	1	0	0	0	0	1	0	1	0	0	1	1
1	0	1	0	0	0	0	1	0	1	0	1	0	1
1	0	1	0	0	0	0	1	0	1	0	1	1	1
1	0	1	0	0	0	0	1	0	1	1	0	0	1

1	0	1	0	0	0	0	1	0	1	1	0	1	1
1	0	1	0	0	0	0	1	0	1	1	1	0	1
1	0	1	0	0	0	0	1	0	1	1	1	1	1
1	0	1	0	0	0	0	1	1	0	0	0	0	1
1	0	1	0	0	0	0	1	1	0	0	0	1	1
1	0	1	0	0	0	0	1	1	0	0	1	0	1
1	0	1	0	0	0	0	1	1	0	0	1	1	1
1	0	1	0	0	0	0	1	1	0	1	0	0	1
1	0	1	0	0	0	0	1	1	0	1	0	1	1
1	0	1	0	0	0	0	1	1	0	1	1	0	1
1	0	1	0	0	0	0	1	1	0	1	1	1	1
1	0	1	0	0	0	0	1	1	1	0	0	0	1
1	0	1	0	0	0	0	1	1	1	0	0	1	1
1	0	1	0	0	0	0	1	1	1	0	1	0	1
1	0	1	0	0	0	0	1	1	1	0	1	1	1
1	0	1	0	0	0	0	1	1	1	1	0	0	1
1	0	1	0	0	0	0	1	1	1	1	0	1	1
1	0	1	0	0	0	0	1	1	1	1	1	0	1
1	0	1	0	0	0	0	1	1	1	1	1	1	1
1	0	1	0	0	0	1	0	0	0	0	0	0	1
1	0	1	0	0	0	1	0	0	0	0	0	1	1
1	0	1	0	0	0	1	0	0	0	0	1	0	1
1	0	1	0	0	0	1	0	0	0	0	1	1	1
1	0	1	0	0	0	1	0	0	0	1	0	0	1
1	0	1	0	0	0	1	0	0	0	1	0	1	1
1	0	1	0	0	0	1	0	0	0	1	1	0	1
1	0	1	0	0	0	1	0	0	0	1	1	1	1
1	0	1	0	0	0	1	0	0	1	0	0	0	1
1	0	1	0	0	0	1	0	0	1	0	0	1	1
1	0	1	0	0	0	1	0	0	1	0	1	0	1
1	0	1	0	0	0	1	0	0	1	0	1	1	1
1	0	1	0	0	0	1	0	0	1	1	0	0	1
1	0	1	0	0	0	1	0	0	1	1	0	1	1
1	0	1	0	0	0	1	0	0	1	1	1	0	1
1	0	1	0	0	0	1	0	0	1	1	1	1	1
1	0	1	0	0	0	1	0	1	0	0	0	0	1
1	0	1	0	0	0	1	0	1	0	0	0	1	1
1	0	1	0	0	0	1	0	1	0	0	1	0	1
1	0	1	0	0	0	1	0	1	0	0	1	1	1
1	0	1	0	0	0	1	0	1	0	1	0	0	1
1	0	1	0	0	0	1	0	1	0	1	0	1	1
1	0	1	0	0	0	1	0	1	0	1	1	0	1
1	0	1	0	0	0	1	0	1	0	1	1	1	1
1	0	1	0	0	0	1	0	1	1	0	0	0	1
1	0	1	0	0	0	1	0	1	1	0	0	1	1
1	0	1	0	0	0	1	0	1	1	0	1	0	1

1	0	1	0	0	0	1	0	1	1	0	1	1	1
1	0	1	0	0	0	1	0	1	1	1	0	0	1
1	0	1	0	0	0	1	0	1	1	1	0	1	1
1	0	1	0	0	0	1	0	1	1	1	1	0	1
1	0	1	0	0	0	1	0	1	1	1	1	1	1
1	0	1	0	0	0	1	1	0	0	0	0	0	1
1	0	1	0	0	0	1	1	0	0	0	0	1	1
1	0	1	0	0	0	1	1	0	0	0	1	0	1
1	0	1	0	0	0	1	1	0	0	0	1	1	1
1	0	1	0	0	0	1	1	0	0	1	0	0	1
1	0	1	0	0	0	1	1	0	0	1	0	1	1
1	0	1	0	0	0	1	1	0	0	1	1	0	1
1	0	1	0	0	0	1	1	0	0	1	1	1	1
1	0	1	0	0	0	1	1	0	1	0	0	0	1
1	0	1	0	0	0	1	1	0	1	0	0	1	1
1	0	1	0	0	0	1	1	0	1	0	1	0	1
1	0	1	0	0	0	1	1	0	1	0	1	1	1
1	0	1	0	0	0	1	1	0	1	1	0	0	1
1	0	1	0	0	0	1	1	0	1	1	0	1	1
1	0	1	0	0	0	1	1	0	1	1	1	0	1
1	0	1	0	0	0	1	1	0	1	1	1	1	1
1	0	1	0	0	0	1	1	1	0	0	0	0	1
1	0	1	0	0	0	1	1	1	0	0	0	1	1
1	0	1	0	0	0	1	1	1	0	0	1	0	1
1	0	1	0	0	0	1	1	1	0	0	1	1	1
1	0	1	0	0	0	1	1	1	0	1	0	0	1
1	0	1	0	0	0	1	1	1	0	1	0	1	1
1	0	1	0	0	0	1	1	1	0	1	1	0	1
1	0	1	0	0	0	1	1	1	0	1	1	1	1
1	0	1	0	0	0	1	1	1	1	0	0	0	1
1	0	1	0	0	0	1	1	1	1	0	0	1	1
1	0	1	0	0	0	1	1	1	1	0	1	0	1
1	0	1	0	0	0	1	1	1	1	0	1	1	1
1	0	1	0	0	0	1	1	1	1	1	0	0	1
1	0	1	0	0	0	1	1	1	1	1	0	1	1
1	0	1	0	0	0	1	1	1	1	1	1	0	1
1	0	1	0	0	0	1	1	1	1	1	1	1	1
1	0	1	0	0	1	0	0	0	0	0	0	0	1
1	0	1	0	0	1	0	0	0	0	0	0	1	1
1	0	1	0	0	1	0	0	0	0	0	1	0	1
1	0	1	0	0	1	0	0	0	0	0	1	1	1
1	0	1	0	0	1	0	0	0	0	1	0	0	1
1	0	1	0	0	1	0	0	0	0	1	0	1	1
1	0	1	0	0	1	0	0	0	0	1	1	0	1
1	0	1	0	0	1	0	0	0	0	1	1	1	1
1	0	1	0	0	1	0	0	0	1	0	0	0	1

1	0	1	0	0	1	0	0	0	1	0	0	1	1
1	0	1	0	0	1	0	0	0	1	0	1	0	1
1	0	1	0	0	1	0	0	0	1	0	1	1	1
1	0	1	0	0	1	0	0	0	1	1	0	0	1
1	0	1	0	0	1	0	0	0	1	1	0	1	1
1	0	1	0	0	1	0	0	0	1	1	1	0	1
1	0	1	0	0	1	0	0	0	1	1	1	1	1
1	0	1	0	0	1	0	0	1	0	0	0	0	1
1	0	1	0	0	1	0	0	1	0	0	0	1	1
1	0	1	0	0	1	0	0	1	0	0	1	0	1
1	0	1	0	0	1	0	0	1	0	0	1	1	1
1	0	1	0	0	1	0	0	1	0	1	0	0	1
1	0	1	0	0	1	0	0	1	0	1	0	1	1
1	0	1	0	0	1	0	0	1	0	1	1	0	1
1	0	1	0	0	1	0	0	1	0	1	1	1	1
1	0	1	0	0	1	0	0	1	1	0	0	0	1
1	0	1	0	0	1	0	0	1	1	0	0	1	1
1	0	1	0	0	1	0	0	1	1	0	1	0	1
1	0	1	0	0	1	0	0	1	1	0	1	1	1
1	0	1	0	0	1	0	0	1	1	1	0	0	1
1	0	1	0	0	1	0	0	1	1	1	0	1	1
1	0	1	0	0	1	0	0	1	1	1	1	0	1
1	0	1	0	0	1	0	0	1	1	1	1	1	1
1	0	1	0	0	1	0	1	0	0	0	0	0	1
1	0	1	0	0	1	0	1	0	0	0	0	1	1
1	0	1	0	0	1	0	1	0	0	0	1	0	1
1	0	1	0	0	1	0	1	0	0	0	1	1	1
1	0	1	0	0	1	0	1	0	0	1	0	0	1
1	0	1	0	0	1	0	1	0	0	1	0	1	1
1	0	1	0	0	1	0	1	0	0	1	1	0	1
1	0	1	0	0	1	0	1	0	0	1	1	1	1
1	0	1	0	0	1	0	1	0	1	0	0	0	1
1	0	1	0	0	1	0	1	0	1	0	0	1	1
1	0	1	0	0	1	0	1	0	1	0	1	0	1
1	0	1	0	0	1	0	1	0	1	0	1	1	1
1	0	1	0	0	1	0	1	0	1	1	0	0	1
1	0	1	0	0	1	0	1	0	1	1	0	1	1
1	0	1	0	0	1	0	1	0	1	1	1	0	1
1	0	1	0	0	1	0	1	0	1	1	1	1	1
1	0	1	0	0	1	0	1	1	0	0	0	0	1
1	0	1	0	0	1	0	1	1	0	0	0	1	1
1	0	1	0	0	1	0	1	1	0	0	1	0	1
1	0	1	0	0	1	0	1	1	0	0	1	1	1
1	0	1	0	0	1	0	1	1	0	1	0	0	1
1	0	1	0	0	1	0	1	1	0	1	0	1	1
1	0	1	0	0	1	0	1	1	0	1	1	0	1

1	0	1	0	0	1	0	1	1	0	1	1	1	1
1	0	1	0	0	1	0	1	1	1	0	0	0	1
1	0	1	0	0	1	0	1	1	1	0	0	1	1
1	0	1	0	0	1	0	1	1	1	0	1	0	1
1	0	1	0	0	1	0	1	1	1	0	1	1	1
1	0	1	0	0	1	0	1	1	1	1	0	0	1
1	0	1	0	0	1	0	1	1	1	1	0	1	1
1	0	1	0	0	1	0	1	1	1	1	1	0	1
1	0	1	0	0	1	0	1	1	1	1	1	1	1
1	0	1	0	0	1	1	0	0	0	0	0	0	1
1	0	1	0	0	1	1	0	0	0	0	0	1	1
1	0	1	0	0	1	1	0	0	0	0	1	0	1
1	0	1	0	0	1	1	0	0	0	0	1	1	1
1	0	1	0	0	1	1	0	0	0	1	0	0	1
1	0	1	0	0	1	1	0	0	0	1	0	1	1
1	0	1	0	0	1	1	0	0	0	1	1	0	1
1	0	1	0	0	1	1	0	0	0	1	1	1	1
1	0	1	0	0	1	1	0	0	1	0	0	0	1
1	0	1	0	0	1	1	0	0	1	0	0	1	1
1	0	1	0	0	1	1	0	0	1	0	1	0	1
1	0	1	0	0	1	1	0	0	1	0	1	1	1
1	0	1	0	0	1	1	0	0	1	1	0	0	1
1	0	1	0	0	1	1	0	0	1	1	0	1	1
1	0	1	0	0	1	1	0	0	1	1	1	0	1
1	0	1	0	0	1	1	0	0	1	1	1	1	1
1	0	1	0	0	1	1	0	1	0	0	0	0	1
1	0	1	0	0	1	1	0	1	0	0	0	1	1
1	0	1	0	0	1	1	0	1	0	0	1	0	1
1	0	1	0	0	1	1	0	1	0	0	1	1	1
1	0	1	0	0	1	1	0	1	0	1	0	0	1
1	0	1	0	0	1	1	0	1	0	1	0	1	1
1	0	1	0	0	1	1	0	1	0	1	1	0	1
1	0	1	0	0	1	1	0	1	0	1	1	1	1
1	0	1	0	0	1	1	0	1	1	0	0	0	1
1	0	1	0	0	1	1	0	1	1	0	0	1	1
1	0	1	0	0	1	1	0	1	1	0	1	0	1
1	0	1	0	0	1	1	0	1	1	0	1	1	1
1	0	1	0	0	1	1	0	1	1	1	0	0	1
1	0	1	0	0	1	1	0	1	1	1	0	1	1
1	0	1	0	0	1	1	0	1	1	1	1	0	1
1	0	1	0	0	1	1	0	1	1	1	1	1	1
1	0	1	0	0	1	1	1	0	0	1	0	0	1
1	0	1	0	0	1	1	1	0	0	0	0	1	1
1	0	1	0	0	1	1	1	0	0	0	1	0	1
1	0	1	0	0	1	1	1	0	0	0	1	1	1
1	0	1	0	0	1	1	1	0	0	0	0	0	1

1	0	1	0	0	1	1	1	0	0	1	0	1	1
1	0	1	0	0	1	1	1	0	0	1	1	0	1
1	0	1	0	0	1	1	1	0	0	1	1	1	1
1	0	1	0	0	1	1	1	0	1	1	0	0	1
1	0	1	0	0	1	1	1	0	1	0	0	1	1
1	0	1	0	0	1	1	1	0	1	0	1	0	1
1	0	1	0	0	1	1	1	0	1	0	1	1	1
1	0	1	0	0	1	1	1	0	1	0	0	0	1
1	0	1	0	0	1	1	1	0	1	1	0	1	1
1	0	1	0	0	1	1	1	0	1	1	1	0	1
1	0	1	0	0	1	1	1	0	1	1	1	1	1
1	0	1	0	0	1	1	1	1	0	1	0	0	1
1	0	1	0	0	1	1	1	1	0	0	0	1	1
1	0	1	0	0	1	1	1	1	0	0	1	0	1
1	0	1	0	0	1	1	1	1	0	0	1	1	1
1	0	1	0	0	1	1	1	1	0	0	0	0	1
1	0	1	0	0	1	1	1	1	0	1	0	1	1
1	0	1	0	0	1	1	1	1	0	1	1	0	1
1	0	1	0	0	1	1	1	1	0	1	1	1	1
1	0	1	0	0	1	1	1	1	1	1	0	0	1
1	0	1	0	0	1	1	1	1	1	0	0	1	1
1	0	1	0	0	1	1	1	1	1	0	1	0	1
1	0	1	0	0	1	1	1	1	1	0	1	1	1
1	0	1	0	0	1	1	1	1	1	0	0	0	1
1	0	1	0	0	1	1	1	1	1	1	0	1	1
1	0	1	0	0	1	1	1	1	1	1	1	0	1
1	0	1	0	0	1	1	1	1	1	1	1	1	1
1	0	1	0	1	0	0	0	0	0	0	0	0	1
1	0	1	0	1	0	0	0	0	0	0	0	1	1
1	0	1	0	1	0	0	0	0	0	0	1	0	1
1	0	1	0	1	0	0	0	0	0	0	1	1	1
1	0	1	0	1	0	0	0	0	0	1	0	0	1
1	0	1	0	1	0	0	0	0	0	1	0	1	1
1	0	1	0	1	0	0	0	0	0	1	1	0	1
1	0	1	0	1	0	0	0	0	0	1	1	1	1
1	0	1	0	1	0	0	0	0	1	0	0	0	1
1	0	1	0	1	0	0	0	0	1	0	0	1	1
1	0	1	0	1	0	0	0	0	1	0	1	0	1
1	0	1	0	1	0	0	0	0	1	0	1	1	1
1	0	1	0	1	0	0	0	0	1	1	0	0	1
1	0	1	0	1	0	0	0	0	1	1	0	1	1
1	0	1	0	1	0	0	0	0	1	1	1	0	1
1	0	1	0	1	0	0	0	0	1	1	1	1	1
1	0	1	0	1	0	0	0	1	0	0	0	0	1
1	0	1	0	1	0	0	0	1	0	0	0	1	1
1	0	1	0	1	0	0	0	1	0	0	1	0	1

1	0	1	0	1	0	0	0	1	0	0	1	1	1
1	0	1	0	1	0	0	0	1	0	1	0	0	1
1	0	1	0	1	0	0	0	1	0	1	0	1	1
1	0	1	0	1	0	0	0	1	0	1	1	0	1
1	0	1	0	1	0	0	0	1	0	1	1	1	1
1	0	1	0	1	0	0	0	1	1	0	0	0	1
1	0	1	0	1	0	0	0	1	1	0	0	1	1
1	0	1	0	1	0	0	0	1	1	0	1	0	1
1	0	1	0	1	0	0	0	1	1	0	1	1	1
1	0	1	0	1	0	0	0	1	1	1	0	0	1
1	0	1	0	1	0	0	0	1	1	1	0	1	1
1	0	1	0	1	0	0	0	1	1	1	1	0	1
1	0	1	0	1	0	0	0	1	1	1	1	1	1
1	0	1	0	1	0	0	1	0	0	0	0	0	1
1	0	1	0	1	0	0	1	0	0	0	0	1	1
1	0	1	0	1	0	0	1	0	0	0	1	0	1
1	0	1	0	1	0	0	1	0	0	0	1	1	1
1	0	1	0	1	0	0	1	0	0	1	0	0	1
1	0	1	0	1	0	0	1	0	0	1	0	1	1
1	0	1	0	1	0	0	1	0	0	1	1	0	1
1	0	1	0	1	0	0	1	0	0	1	1	1	1
1	0	1	0	1	0	0	1	0	1	0	0	0	1
1	0	1	0	1	0	0	1	0	1	0	0	1	1
1	0	1	0	1	0	0	1	0	1	0	1	0	1
1	0	1	0	1	0	0	1	0	1	0	1	1	1
1	0	1	0	1	0	0	1	0	1	1	0	0	1
1	0	1	0	1	0	0	1	0	1	1	0	1	1
1	0	1	0	1	0	0	1	0	1	1	1	0	1
1	0	1	0	1	0	0	1	0	1	1	1	1	1
1	0	1	0	1	0	0	1	1	0	0	0	0	1
1	0	1	0	1	0	0	1	1	0	0	0	1	1
1	0	1	0	1	0	0	1	1	0	0	1	0	1
1	0	1	0	1	0	0	1	1	0	0	1	1	1
1	0	1	0	1	0	0	1	1	0	1	0	0	1
1	0	1	0	1	0	0	1	1	0	1	0	1	1
1	0	1	0	1	0	0	1	1	0	1	1	0	1
1	0	1	0	1	0	0	1	1	0	1	1	1	1
1	0	1	0	1	0	0	1	1	1	0	0	0	1
1	0	1	0	1	0	0	1	1	1	0	0	1	1
1	0	1	0	1	0	0	1	1	1	0	1	0	1
1	0	1	0	1	0	0	1	1	1	0	1	1	1
1	0	1	0	1	0	0	1	1	1	1	0	0	1
1	0	1	0	1	0	0	1	1	1	1	0	1	1
1	0	1	0	1	0	0	1	1	1	1	1	0	1
1	0	1	0	1	0	0	1	1	1	1	1	1	1
1	0	1	0	1	0	1	0	0	0	0	0	0	1

1	0	1	0	1	0	1	0	0	0	0	0	1	1
1	0	1	0	1	0	1	0	0	0	0	1	0	1
1	0	1	0	1	0	1	0	0	0	0	1	1	1
1	0	1	0	1	0	1	0	0	0	1	0	0	1
1	0	1	0	1	0	1	0	0	0	1	0	1	1
1	0	1	0	1	0	1	0	0	0	1	1	0	1
1	0	1	0	1	0	1	0	0	0	1	1	1	1
1	0	1	0	1	0	1	0	0	1	0	0	0	1
1	0	1	0	1	0	1	0	0	1	0	0	1	1
1	0	1	0	1	0	1	0	0	1	0	1	0	1
1	0	1	0	1	0	1	0	0	1	0	1	1	1
1	0	1	0	1	0	1	0	0	1	1	0	0	1
1	0	1	0	1	0	1	0	0	1	1	0	1	1
1	0	1	0	1	0	1	0	0	1	1	1	0	1
1	0	1	0	1	0	1	0	0	1	1	1	1	1
1	0	1	0	1	0	1	0	1	0	0	0	0	1
1	0	1	0	1	0	1	0	1	0	0	0	1	1
1	0	1	0	1	0	1	0	1	0	0	1	0	1
1	0	1	0	1	0	1	0	1	0	0	1	1	1
1	0	1	0	1	0	1	0	1	0	1	0	0	1
1	0	1	0	1	0	1	0	1	0	1	0	1	1
1	0	1	0	1	0	1	0	1	0	1	1	0	1
1	0	1	0	1	0	1	0	1	0	1	1	1	1
1	0	1	0	1	0	1	0	1	1	0	0	0	1
1	0	1	0	1	0	1	0	1	1	0	0	1	1
1	0	1	0	1	0	1	0	1	1	0	1	0	1
1	0	1	0	1	0	1	0	1	1	0	1	1	1
1	0	1	0	1	0	1	0	1	1	1	0	0	1
1	0	1	0	1	0	1	0	1	1	1	0	1	1
1	0	1	0	1	0	1	0	1	1	1	1	0	1
1	0	1	0	1	0	1	0	1	1	1	1	1	1
1	0	1	0	1	0	1	1	0	0	0	0	0	1
1	0	1	0	1	0	1	1	0	0	0	0	1	1
1	0	1	0	1	0	1	1	0	0	0	1	0	1
1	0	1	0	1	0	1	1	0	0	0	1	1	1
1	0	1	0	1	0	1	1	0	0	1	0	0	1
1	0	1	0	1	0	1	1	0	0	1	0	1	1
1	0	1	0	1	0	1	1	0	0	1	1	0	1
1	0	1	0	1	0	1	1	0	0	1	1	1	1
1	0	1	0	1	0	1	1	0	1	0	0	0	1
1	0	1	0	1	0	1	1	0	1	0	0	1	1
1	0	1	0	1	0	1	1	0	1	0	1	0	1
1	0	1	0	1	0	1	1	0	1	0	1	1	1
1	0	1	0	1	0	1	1	0	1	1	0	0	1
1	0	1	0	1	0	1	1	0	1	1	0	1	1
1	0	1	0	1	0	1	1	0	1	1	1	0	1

1	0	1	0	1	0	1	1	0	1	1	1	1	1
1	0	1	0	1	0	1	1	1	0	0	0	0	1
1	0	1	0	1	0	1	1	1	0	0	0	1	1
1	0	1	0	1	0	1	1	1	0	0	1	0	1
1	0	1	0	1	0	1	1	1	0	0	1	1	1
1	0	1	0	1	0	1	1	1	0	1	0	0	1
1	0	1	0	1	0	1	1	1	0	1	0	1	1
1	0	1	0	1	0	1	1	1	0	1	1	0	1
1	0	1	0	1	0	1	1	1	0	1	1	1	1
1	0	1	0	1	0	1	1	1	1	0	0	0	1
1	0	1	0	1	0	1	1	1	1	0	0	1	1
1	0	1	0	1	0	1	1	1	1	0	1	0	1
1	0	1	0	1	0	1	1	1	1	0	1	1	1
1	0	1	0	1	0	1	1	1	1	1	0	0	1
1	0	1	0	1	0	1	1	1	1	1	0	1	1
1	0	1	0	1	0	1	1	1	1	1	1	0	1
1	0	1	0	1	0	1	1	1	1	1	1	1	1
1	0	1	0	1	1	0	0	0	0	0	0	0	1
1	0	1	0	1	1	0	0	0	0	0	0	1	1
1	0	1	0	1	1	0	0	0	0	0	1	0	1
1	0	1	0	1	1	0	0	0	0	0	1	1	1
1	0	1	0	1	1	0	0	0	0	1	0	0	1
1	0	1	0	1	1	0	0	0	0	1	0	1	1
1	0	1	0	1	1	0	0	0	0	1	1	0	1
1	0	1	0	1	1	0	0	0	0	1	1	1	1
1	0	1	0	1	1	0	0	0	1	0	0	0	1
1	0	1	0	1	1	0	0	0	1	0	0	1	1
1	0	1	0	1	1	0	0	0	1	0	1	0	1
1	0	1	0	1	1	0	0	0	1	0	1	1	1
1	0	1	0	1	1	0	0	0	1	1	0	0	1
1	0	1	0	1	1	0	0	0	1	1	0	1	1
1	0	1	0	1	1	0	0	0	1	1	1	0	1
1	0	1	0	1	1	0	0	0	1	1	1	1	1
1	0	1	0	1	1	0	0	1	0	0	0	0	1
1	0	1	0	1	1	0	0	1	0	0	0	1	1
1	0	1	0	1	1	0	0	1	0	0	1	0	1
1	0	1	0	1	1	0	0	1	0	0	1	1	1
1	0	1	0	1	1	0	0	1	0	1	0	0	1
1	0	1	0	1	1	0	0	1	0	1	0	1	1
1	0	1	0	1	1	0	0	1	0	1	1	0	1
1	0	1	0	1	1	0	0	1	0	1	1	1	1
1	0	1	0	1	1	0	0	1	1	0	0	0	1
1	0	1	0	1	1	0	0	1	1	0	0	1	1
1	0	1	0	1	1	0	0	1	1	0	1	0	1
1	0	1	0	1	1	0	0	1	1	0	1	1	1
1	0	1	0	1	1	0	0	1	1	1	0	0	1

1	0	1	0	1	1	0	0	1	1	1	0	1	1
1	0	1	0	1	1	0	0	1	1	1	1	0	1
1	0	1	0	1	1	0	0	1	1	1	1	1	1
1	0	1	0	1	1	0	1	0	0	0	0	0	1
1	0	1	0	1	1	0	1	0	0	0	0	1	1
1	0	1	0	1	1	0	1	0	0	0	1	0	1
1	0	1	0	1	1	0	1	0	0	0	1	1	1
1	0	1	0	1	1	0	1	0	0	1	0	0	1
1	0	1	0	1	1	0	1	0	0	1	0	1	1
1	0	1	0	1	1	0	1	0	0	1	1	0	1
1	0	1	0	1	1	0	1	0	0	1	1	1	1
1	0	1	0	1	1	0	1	0	1	0	0	0	1
1	0	1	0	1	1	0	1	0	1	0	0	1	1
1	0	1	0	1	1	0	1	0	1	0	1	0	1
1	0	1	0	1	1	0	1	0	1	0	1	1	1
1	0	1	0	1	1	0	1	0	1	1	0	0	1
1	0	1	0	1	1	0	1	0	1	1	0	1	1
1	0	1	0	1	1	0	1	0	1	1	1	0	1
1	0	1	0	1	1	0	1	0	1	1	1	1	1
1	0	1	0	1	1	0	1	1	0	0	0	0	1
1	0	1	0	1	1	0	1	1	0	0	0	1	1
1	0	1	0	1	1	0	1	1	0	0	1	0	1
1	0	1	0	1	1	0	1	1	0	0	1	1	1
1	0	1	0	1	1	0	1	1	0	1	0	0	1
1	0	1	0	1	1	0	1	1	0	1	0	1	1
1	0	1	0	1	1	0	1	1	0	1	1	0	1
1	0	1	0	1	1	0	1	1	0	1	1	1	1
1	0	1	0	1	1	0	1	1	1	0	0	0	1
1	0	1	0	1	1	0	1	1	1	0	0	1	1
1	0	1	0	1	1	0	1	1	1	0	1	0	1
1	0	1	0	1	1	0	1	1	1	0	1	1	1
1	0	1	0	1	1	0	1	1	1	1	0	0	1
1	0	1	0	1	1	0	1	1	1	1	0	1	1
1	0	1	0	1	1	0	1	1	1	1	1	0	1
1	0	1	0	1	1	0	1	1	1	1	1	1	1
1	0	1	0	1	1	1	0	0	0	0	0	0	1
1	0	1	0	1	1	1	0	0	0	0	0	1	1
1	0	1	0	1	1	1	0	0	0	0	1	0	1
1	0	1	0	1	1	1	0	0	0	0	1	1	1
1	0	1	0	1	1	1	0	0	0	1	0	0	1
1	0	1	0	1	1	1	0	0	0	1	0	1	1
1	0	1	0	1	1	1	0	0	0	1	1	0	1
1	0	1	0	1	1	1	0	0	0	1	1	1	1
1	0	1	0	1	1	1	0	0	1	0	0	0	1
1	0	1	0	1	1	1	0	0	1	0	0	1	1
1	0	1	0	1	1	1	0	0	1	0	1	0	1

1	0	1	0	1	1	1	0	0	1	0	1	1	1
1	0	1	0	1	1	1	0	0	1	1	0	0	1
1	0	1	0	1	1	1	0	0	1	1	0	1	1
1	0	1	0	1	1	1	0	0	1	1	1	0	1
1	0	1	0	1	1	1	0	0	1	1	1	1	1
1	0	1	0	1	1	1	0	1	0	0	0	0	1
1	0	1	0	1	1	1	0	1	0	0	0	1	1
1	0	1	0	1	1	1	0	1	0	0	1	0	1
1	0	1	0	1	1	1	0	1	0	0	1	1	1
1	0	1	0	1	1	1	0	1	0	1	0	0	1
1	0	1	0	1	1	1	0	1	0	1	0	1	1
1	0	1	0	1	1	1	0	1	0	1	1	0	1
1	0	1	0	1	1	1	0	1	0	1	1	1	1
1	0	1	0	1	1	1	0	1	1	0	0	0	1
1	0	1	0	1	1	1	0	1	1	0	0	1	1
1	0	1	0	1	1	1	0	1	1	0	1	0	1
1	0	1	0	1	1	1	0	1	1	0	1	1	1
1	0	1	0	1	1	1	0	1	1	1	0	0	1
1	0	1	0	1	1	1	0	1	1	1	0	1	1
1	0	1	0	1	1	1	0	1	1	1	1	0	1
1	0	1	0	1	1	1	0	1	1	1	1	1	1
1	0	1	0	1	1	1	1	0	0	1	0	0	1
1	0	1	0	1	1	1	1	0	0	0	0	1	1
1	0	1	0	1	1	1	1	0	0	0	1	0	1
1	0	1	0	1	1	1	1	0	0	0	1	1	1
1	0	1	0	1	1	1	1	0	0	0	0	0	1
1	0	1	0	1	1	1	1	0	0	1	0	1	1
1	0	1	0	1	1	1	1	0	0	1	1	0	1
1	0	1	0	1	1	1	1	0	0	1	1	1	1
1	0	1	0	1	1	1	1	0	1	1	0	0	1
1	0	1	0	1	1	1	1	0	1	0	0	1	1
1	0	1	0	1	1	1	1	0	1	0	1	0	1
1	0	1	0	1	1	1	1	0	1	0	1	1	1
1	0	1	0	1	1	1	1	0	1	0	0	0	1
1	0	1	0	1	1	1	1	0	1	1	0	1	1
1	0	1	0	1	1	1	1	0	1	1	1	0	1
1	0	1	0	1	1	1	1	0	1	1	1	1	1
1	0	1	0	1	1	1	1	1	0	1	0	0	1
1	0	1	0	1	1	1	1	1	0	0	0	1	1
1	0	1	0	1	1	1	1	1	0	0	1	0	1
1	0	1	0	1	1	1	1	1	0	0	1	1	1
1	0	1	0	1	1	1	1	1	0	0	0	0	1
1	0	1	0	1	1	1	1	1	0	1	0	1	1
1	0	1	0	1	1	1	1	1	0	1	1	1	1
1	0	1	0	1	1	1	1	1	1	1	0	0	1

1	0	1	0	1	1	1	1	1	1	0	0	1	1
1	0	1	0	1	1	1	1	1	1	0	1	0	1
1	0	1	0	1	1	1	1	1	1	0	1	1	1
1	0	1	0	1	1	1	1	1	1	0	0	0	1
1	0	1	0	1	1	1	1	1	1	1	0	1	1
1	0	1	0	1	1	1	1	1	1	1	1	0	1
1	0	1	0	1	1	1	1	1	1	1	1	1	1
1	0	1	1	0	0	0	0	0	0	0	0	0	1
1	0	1	1	0	0	0	0	0	0	0	0	1	1
1	0	1	1	0	0	0	0	0	0	0	1	0	1
1	0	1	1	0	0	0	0	0	0	0	1	1	1
1	0	1	1	0	0	0	0	0	0	1	0	0	1
1	0	1	1	0	0	0	0	0	0	1	0	1	1
1	0	1	1	0	0	0	0	0	0	1	1	0	1
1	0	1	1	0	0	0	0	0	0	1	1	1	1
1	0	1	1	0	0	0	0	0	1	0	0	0	1
1	0	1	1	0	0	0	0	0	1	0	0	1	1
1	0	1	1	0	0	0	0	0	1	0	1	0	1
1	0	1	1	0	0	0	0	0	1	0	1	1	1
1	0	1	1	0	0	0	0	0	1	1	0	0	1
1	0	1	1	0	0	0	0	0	1	1	0	1	1
1	0	1	1	0	0	0	0	0	1	1	1	0	1
1	0	1	1	0	0	0	0	0	1	1	1	1	1
1	0	1	1	0	0	0	0	1	0	0	0	0	1
1	0	1	1	0	0	0	0	1	0	0	0	1	1
1	0	1	1	0	0	0	0	1	0	0	1	0	1
1	0	1	1	0	0	0	0	1	0	0	1	1	1
1	0	1	1	0	0	0	0	1	0	1	0	0	1
1	0	1	1	0	0	0	0	1	0	1	0	1	1
1	0	1	1	0	0	0	0	1	0	1	1	0	1
1	0	1	1	0	0	0	0	1	0	1	1	1	1
1	0	1	1	0	0	0	0	1	1	0	0	0	1
1	0	1	1	0	0	0	0	1	1	0	0	1	1
1	0	1	1	0	0	0	0	1	1	0	1	0	1
1	0	1	1	0	0	0	0	1	1	0	1	1	1
1	0	1	1	0	0	0	0	1	1	1	0	0	1
1	0	1	1	0	0	0	0	1	1	1	0	1	1
1	0	1	1	0	0	0	0	1	1	1	1	0	1
1	0	1	1	0	0	0	0	1	1	1	1	1	1
1	0	1	1	0	0	0	1	0	0	0	0	0	1
1	0	1	1	0	0	0	1	0	0	0	0	1	1
1	0	1	1	0	0	0	1	0	0	0	1	0	1
1	0	1	1	0	0	0	1	0	0	0	1	1	1
1	0	1	1	0	0	0	1	0	0	1	0	0	1
1	0	1	1	0	0	0	1	0	0	1	0	1	1
1	0	1	1	0	0	0	1	0	0	1	1	0	1

1	0	1	1	0	0	0	1	0	0	1	1	1	1
1	0	1	1	0	0	0	1	0	1	0	0	0	1
1	0	1	1	0	0	0	1	0	1	0	0	1	1
1	0	1	1	0	0	0	1	0	1	0	1	0	1
1	0	1	1	0	0	0	1	0	1	0	1	1	1
1	0	1	1	0	0	0	1	0	1	1	0	0	1
1	0	1	1	0	0	0	1	0	1	1	0	1	1
1	0	1	1	0	0	0	1	0	1	1	1	0	1
1	0	1	1	0	0	0	1	0	1	1	1	1	1
1	0	1	1	0	0	0	1	1	0	0	0	0	1
1	0	1	1	0	0	0	1	1	0	0	0	1	1
1	0	1	1	0	0	0	1	1	0	0	1	0	1
1	0	1	1	0	0	0	1	1	0	0	1	1	1
1	0	1	1	0	0	0	1	1	0	1	0	0	1
1	0	1	1	0	0	0	1	1	0	1	0	1	1
1	0	1	1	0	0	0	1	1	0	1	1	0	1
1	0	1	1	0	0	0	1	1	0	1	1	1	1
1	0	1	1	0	0	0	1	1	1	0	0	0	1
1	0	1	1	0	0	0	1	1	1	0	0	1	1
1	0	1	1	0	0	0	1	1	1	0	1	0	1
1	0	1	1	0	0	0	1	1	1	0	1	1	1
1	0	1	1	0	0	0	1	1	1	1	0	0	1
1	0	1	1	0	0	0	1	1	1	1	0	1	1
1	0	1	1	0	0	0	1	1	1	1	1	0	1
1	0	1	1	0	0	0	1	1	1	1	1	1	1
1	0	1	1	0	0	1	0	0	0	0	0	0	1
1	0	1	1	0	0	1	0	0	0	0	0	1	1
1	0	1	1	0	0	1	0	0	0	0	1	0	1
1	0	1	1	0	0	1	0	0	0	0	1	1	1
1	0	1	1	0	0	1	0	0	0	1	0	0	1
1	0	1	1	0	0	1	0	0	0	1	0	1	1
1	0	1	1	0	0	1	0	0	0	1	1	0	1
1	0	1	1	0	0	1	0	0	0	1	1	1	1
1	0	1	1	0	0	1	0	0	1	0	0	0	1
1	0	1	1	0	0	1	0	0	1	0	0	1	1
1	0	1	1	0	0	1	0	0	1	0	1	0	1
1	0	1	1	0	0	1	0	0	1	0	1	1	1
1	0	1	1	0	0	1	0	0	1	1	0	0	1
1	0	1	1	0	0	1	0	0	1	1	0	1	1
1	0	1	1	0	0	1	0	0	1	1	1	0	1
1	0	1	1	0	0	1	0	0	1	1	1	1	1
1	0	1	1	0	0	1	0	1	0	0	0	0	1
1	0	1	1	0	0	1	0	1	0	0	0	1	1
1	0	1	1	0	0	1	0	1	0	0	1	0	1
1	0	1	1	0	0	1	0	1	0	0	1	1	1
1	0	1	1	0	0	1	0	1	0	1	0	0	1

1	0	1	1	0	0	1	0	1	0	1	0	1	1
1	0	1	1	0	0	1	0	1	0	1	1	0	1
1	0	1	1	0	0	1	0	1	0	1	1	1	1
1	0	1	1	0	0	1	0	1	1	0	0	0	1
1	0	1	1	0	0	1	0	1	1	0	0	1	1
1	0	1	1	0	0	1	0	1	1	0	1	0	1
1	0	1	1	0	0	1	0	1	1	0	1	1	1
1	0	1	1	0	0	1	0	1	1	1	0	0	1
1	0	1	1	0	0	1	0	1	1	1	0	1	1
1	0	1	1	0	0	1	0	1	1	1	1	0	1
1	0	1	1	0	0	1	0	1	1	1	1	1	1
1	0	1	1	0	0	1	1	0	0	0	0	0	1
1	0	1	1	0	0	1	1	0	0	0	0	1	1
1	0	1	1	0	0	1	1	0	0	0	1	0	1
1	0	1	1	0	0	1	1	0	0	0	1	1	1
1	0	1	1	0	0	1	1	0	0	1	0	0	1
1	0	1	1	0	0	1	1	0	0	1	0	1	1
1	0	1	1	0	0	1	1	0	0	1	1	0	1
1	0	1	1	0	0	1	1	0	0	1	1	1	1
1	0	1	1	0	0	1	1	0	1	0	0	0	1
1	0	1	1	0	0	1	1	0	1	0	0	1	1
1	0	1	1	0	0	1	1	0	1	0	1	0	1
1	0	1	1	0	0	1	1	0	1	0	1	1	1
1	0	1	1	0	0	1	1	0	1	1	0	0	1
1	0	1	1	0	0	1	1	0	1	1	0	1	1
1	0	1	1	0	0	1	1	0	1	1	1	0	1
1	0	1	1	0	0	1	1	0	1	1	1	1	1
1	0	1	1	0	0	1	1	1	0	0	0	0	1
1	0	1	1	0	0	1	1	1	0	0	0	1	1
1	0	1	1	0	0	1	1	1	0	0	1	0	1
1	0	1	1	0	0	1	1	1	0	0	1	1	1
1	0	1	1	0	0	1	1	1	0	1	0	0	1
1	0	1	1	0	0	1	1	1	0	1	0	1	1
1	0	1	1	0	0	1	1	1	0	1	1	0	1
1	0	1	1	0	0	1	1	1	0	1	1	1	1
1	0	1	1	0	0	1	1	1	1	0	0	0	1
1	0	1	1	0	0	1	1	1	1	0	0	1	1
1	0	1	1	0	0	1	1	1	1	0	1	0	1
1	0	1	1	0	0	1	1	1	1	0	1	1	1
1	0	1	1	0	0	1	1	1	1	1	0	0	1
1	0	1	1	0	0	1	1	1	1	1	0	1	1
1	0	1	1	0	0	1	1	1	1	1	1	0	1
1	0	1	1	0	0	1	1	1	1	1	1	1	1
1	0	1	1	0	1	0	0	0	0	0	0	0	1
1	0	1	1	0	1	0	0	0	0	0	0	1	1
1	0	1	1	0	1	0	0	0	0	0	1	0	1

1	0	1	1	0	1	0	0	0	0	0	1	1	1
1	0	1	1	0	1	0	0	0	0	1	0	0	1
1	0	1	1	0	1	0	0	0	0	1	0	1	1
1	0	1	1	0	1	0	0	0	0	1	1	0	1
1	0	1	1	0	1	0	0	0	0	1	1	1	1
1	0	1	1	0	1	0	0	0	1	0	0	0	1
1	0	1	1	0	1	0	0	0	1	0	0	1	1
1	0	1	1	0	1	0	0	0	1	0	1	0	1
1	0	1	1	0	1	0	0	0	1	0	1	1	1
1	0	1	1	0	1	0	0	0	1	1	0	0	1
1	0	1	1	0	1	0	0	0	1	1	0	1	1
1	0	1	1	0	1	0	0	0	1	1	1	0	1
1	0	1	1	0	1	0	0	0	1	1	1	1	1
1	0	1	1	0	1	0	0	1	0	0	0	0	1
1	0	1	1	0	1	0	0	1	0	0	0	1	1
1	0	1	1	0	1	0	0	1	0	0	1	0	1
1	0	1	1	0	1	0	0	1	0	0	1	1	1
1	0	1	1	0	1	0	0	1	0	1	0	0	1
1	0	1	1	0	1	0	0	1	0	1	0	1	1
1	0	1	1	0	1	0	0	1	0	1	1	0	1
1	0	1	1	0	1	0	0	1	0	1	1	1	1
1	0	1	1	0	1	0	0	1	1	0	0	0	1
1	0	1	1	0	1	0	0	1	1	0	0	1	1
1	0	1	1	0	1	0	0	1	1	0	1	0	1
1	0	1	1	0	1	0	0	1	1	0	1	1	1
1	0	1	1	0	1	0	0	1	1	1	0	0	1
1	0	1	1	0	1	0	0	1	1	1	0	1	1
1	0	1	1	0	1	0	0	1	1	1	1	0	1
1	0	1	1	0	1	0	0	1	1	1	1	1	1
1	0	1	1	0	1	0	1	0	0	0	0	0	1
1	0	1	1	0	1	0	1	0	0	0	0	1	1
1	0	1	1	0	1	0	1	0	0	0	1	0	1
1	0	1	1	0	1	0	1	0	0	0	1	1	1
1	0	1	1	0	1	0	1	0	0	1	0	0	1
1	0	1	1	0	1	0	1	0	0	1	0	1	1
1	0	1	1	0	1	0	1	0	0	1	1	0	1
1	0	1	1	0	1	0	1	0	0	1	1	1	1
1	0	1	1	0	1	0	1	0	1	0	0	0	1
1	0	1	1	0	1	0	1	0	1	0	0	1	1
1	0	1	1	0	1	0	1	0	1	0	1	0	1
1	0	1	1	0	1	0	1	0	1	0	1	1	1
1	0	1	1	0	1	0	1	0	1	1	0	0	1
1	0	1	1	0	1	0	1	0	1	1	0	1	1
1	0	1	1	0	1	0	1	0	1	1	1	0	1
1	0	1	1	0	1	0	1	0	1	1	1	1	1
1	0	1	1	0	1	0	1	1	0	0	0	0	1

1	0	1	1	0	1	0	1	1	0	0	0	1	1
1	0	1	1	0	1	0	1	1	0	0	1	0	1
1	0	1	1	0	1	0	1	1	0	0	1	1	1
1	0	1	1	0	1	0	1	1	0	1	0	0	1
1	0	1	1	0	1	0	1	1	0	1	0	1	1
1	0	1	1	0	1	0	1	1	0	1	1	0	1
1	0	1	1	0	1	0	1	1	0	1	1	1	1
1	0	1	1	0	1	0	1	1	1	0	0	0	1
1	0	1	1	0	1	0	1	1	1	0	0	1	1
1	0	1	1	0	1	0	1	1	1	0	1	0	1
1	0	1	1	0	1	0	1	1	1	0	1	1	1
1	0	1	1	0	1	0	1	1	1	1	0	0	1
1	0	1	1	0	1	0	1	1	1	1	0	1	1
1	0	1	1	0	1	0	1	1	1	1	1	0	1
1	0	1	1	0	1	0	1	1	1	1	1	1	1
1	0	1	1	0	1	1	0	0	0	0	0	0	1
1	0	1	1	0	1	1	0	0	0	0	0	1	1
1	0	1	1	0	1	1	0	0	0	0	1	0	1
1	0	1	1	0	1	1	0	0	0	0	1	1	1
1	0	1	1	0	1	1	0	0	0	1	0	0	1
1	0	1	1	0	1	1	0	0	0	1	0	1	1
1	0	1	1	0	1	1	0	0	0	1	1	0	1
1	0	1	1	0	1	1	0	0	0	1	1	1	1
1	0	1	1	0	1	1	0	0	1	0	0	0	1
1	0	1	1	0	1	1	0	0	1	0	0	1	1
1	0	1	1	0	1	1	0	0	1	0	1	0	1
1	0	1	1	0	1	1	0	0	1	0	1	1	1
1	0	1	1	0	1	1	0	0	1	1	0	0	1
1	0	1	1	0	1	1	0	0	1	1	0	1	1
1	0	1	1	0	1	1	0	0	1	1	1	0	1
1	0	1	1	0	1	1	0	0	1	1	1	1	1
1	0	1	1	0	1	1	0	1	0	0	0	0	1
1	0	1	1	0	1	1	0	1	0	0	0	1	1
1	0	1	1	0	1	1	0	1	0	0	1	0	1
1	0	1	1	0	1	1	0	1	0	0	1	1	1
1	0	1	1	0	1	1	0	1	0	1	0	0	1
1	0	1	1	0	1	1	0	1	0	1	0	1	1
1	0	1	1	0	1	1	0	1	0	1	1	0	1
1	0	1	1	0	1	1	0	1	0	1	1	1	1
1	0	1	1	0	1	1	0	1	1	0	0	0	1
1	0	1	1	0	1	1	0	1	1	0	0	1	1
1	0	1	1	0	1	1	0	1	1	0	1	0	1
1	0	1	1	0	1	1	0	1	1	0	1	1	1
1	0	1	1	0	1	1	0	1	1	1	0	0	1
1	0	1	1	0	1	1	0	1	1	1	0	1	1
1	0	1	1	0	1	1	0	1	1	1	1	0	1

1	0	1	1	0	1	1	0	1	1	1	1	1	1
1	0	1	1	0	1	1	1	0	0	1	0	0	1
1	0	1	1	0	1	1	1	0	0	0	0	1	1
1	0	1	1	0	1	1	1	0	0	0	1	0	1
1	0	1	1	0	1	1	1	0	0	0	1	1	1
1	0	1	1	0	1	1	1	0	0	0	0	0	1
1	0	1	1	0	1	1	1	0	0	1	0	1	1
1	0	1	1	0	1	1	1	0	0	1	1	0	1
1	0	1	1	0	1	1	1	0	0	1	1	1	1
1	0	1	1	0	1	1	1	0	1	1	0	0	1
1	0	1	1	0	1	1	1	0	1	0	0	1	1
1	0	1	1	0	1	1	1	0	1	0	1	0	1
1	0	1	1	0	1	1	1	0	1	0	1	1	1
1	0	1	1	0	1	1	1	0	1	0	0	0	1
1	0	1	1	0	1	1	1	0	1	1	0	1	1
1	0	1	1	0	1	1	1	0	1	1	1	0	1
1	0	1	1	0	1	1	1	0	1	1	1	1	1
1	0	1	1	0	1	1	1	1	0	1	0	0	1
1	0	1	1	0	1	1	1	1	0	0	0	1	1
1	0	1	1	0	1	1	1	1	0	0	1	0	1
1	0	1	1	0	1	1	1	1	0	0	1	1	1
1	0	1	1	0	1	1	1	1	0	0	0	0	1
1	0	1	1	0	1	1	1	1	0	1	0	1	1
1	0	1	1	0	1	1	1	1	0	1	1	0	1
1	0	1	1	0	1	1	1	1	0	1	1	1	1
1	0	1	1	0	1	1	1	1	1	1	0	0	1
1	0	1	1	0	1	1	1	1	1	0	0	1	1
1	0	1	1	0	1	1	1	1	1	0	1	0	1
1	0	1	1	0	1	1	1	1	1	0	1	1	1
1	0	1	1	0	1	1	1	1	1	0	0	0	1
1	0	1	1	0	1	1	1	1	1	1	0	1	1
1	0	1	1	0	1	1	1	1	1	1	1	0	1
1	0	1	1	0	1	1	1	1	1	1	1	1	1
1	0	1	1	1	0	0	0	0	0	0	0	0	1
1	0	1	1	1	0	0	0	0	0	0	0	1	1
1	0	1	1	1	0	0	0	0	0	0	1	0	1
1	0	1	1	1	0	0	0	0	0	0	1	1	1
1	0	1	1	1	0	0	0	0	0	1	0	0	1
1	0	1	1	1	0	0	0	0	0	1	0	1	1
1	0	1	1	1	0	0	0	0	0	1	1	0	1
1	0	1	1	1	0	0	0	0	0	1	1	1	1
1	0	1	1	1	0	0	0	0	1	0	0	0	1
1	0	1	1	1	0	0	0	0	1	0	0	1	1
1	0	1	1	1	0	0	0	0	1	0	1	0	1
1	0	1	1	1	0	0	0	0	1	0	1	1	1
1	0	1	1	1	0	0	0	0	1	1	0	0	1

1	0	1	1	1	0	0	0	0	1	1	0	1	1
1	0	1	1	1	0	0	0	0	1	1	1	0	1
1	0	1	1	1	0	0	0	0	1	1	1	1	1
1	0	1	1	1	0	0	0	1	0	0	0	0	1
1	0	1	1	1	0	0	0	1	0	0	0	1	1
1	0	1	1	1	0	0	0	1	0	0	1	0	1
1	0	1	1	1	0	0	0	1	0	0	1	1	1
1	0	1	1	1	0	0	0	1	0	1	0	0	1
1	0	1	1	1	0	0	0	1	0	1	0	1	1
1	0	1	1	1	0	0	0	1	0	1	1	0	1
1	0	1	1	1	0	0	0	1	0	1	1	1	1
1	0	1	1	1	0	0	0	1	1	0	0	0	1
1	0	1	1	1	0	0	0	1	1	0	0	1	1
1	0	1	1	1	0	0	0	1	1	0	1	0	1
1	0	1	1	1	0	0	0	1	1	0	1	1	1
1	0	1	1	1	0	0	0	1	1	1	0	0	1
1	0	1	1	1	0	0	0	1	1	1	0	1	1
1	0	1	1	1	0	0	0	1	1	1	1	0	1
1	0	1	1	1	0	0	0	1	1	1	1	1	1
1	0	1	1	1	0	0	1	0	0	0	0	0	1
1	0	1	1	1	0	0	1	0	0	0	0	1	1
1	0	1	1	1	0	0	1	0	0	0	1	0	1
1	0	1	1	1	0	0	1	0	0	0	1	1	1
1	0	1	1	1	0	0	1	0	0	1	0	0	1
1	0	1	1	1	0	0	1	0	0	1	0	1	1
1	0	1	1	1	0	0	1	0	0	1	1	0	1
1	0	1	1	1	0	0	1	0	0	1	1	1	1
1	0	1	1	1	0	0	1	0	1	0	0	0	1
1	0	1	1	1	0	0	1	0	1	0	0	1	1
1	0	1	1	1	0	0	1	0	1	0	1	0	1
1	0	1	1	1	0	0	1	0	1	0	1	1	1
1	0	1	1	1	0	0	1	0	1	1	0	0	1
1	0	1	1	1	0	0	1	0	1	1	0	1	1
1	0	1	1	1	0	0	1	0	1	1	1	0	1
1	0	1	1	1	0	0	1	0	1	1	1	1	1
1	0	1	1	1	0	0	1	1	0	0	0	0	1
1	0	1	1	1	0	0	1	1	0	0	0	1	1
1	0	1	1	1	0	0	1	1	0	0	1	0	1
1	0	1	1	1	0	0	1	1	0	0	1	1	1
1	0	1	1	1	0	0	1	1	0	1	0	0	1
1	0	1	1	1	0	0	1	1	0	1	0	1	1
1	0	1	1	1	0	0	1	1	0	1	1	0	1
1	0	1	1	1	0	0	1	1	0	1	1	1	1
1	0	1	1	1	0	0	1	1	1	0	0	0	1
1	0	1	1	1	0	0	1	1	1	0	0	1	1
1	0	1	1	1	0	0	1	1	1	0	1	0	1

1	0	1	1	1	0	0	1	1	1	0	1	1	1
1	0	1	1	1	0	0	1	1	1	1	0	0	1
1	0	1	1	1	0	0	1	1	1	1	0	1	1
1	0	1	1	1	0	0	1	1	1	1	1	0	1
1	0	1	1	1	0	0	1	1	1	1	1	1	1
1	0	1	1	1	0	1	0	0	0	0	0	0	1
1	0	1	1	1	0	1	0	0	0	0	0	1	1
1	0	1	1	1	0	1	0	0	0	0	1	0	1
1	0	1	1	1	0	1	0	0	0	0	1	1	1
1	0	1	1	1	0	1	0	0	0	1	0	0	1
1	0	1	1	1	0	1	0	0	0	1	0	1	1
1	0	1	1	1	0	1	0	0	0	1	1	0	1
1	0	1	1	1	0	1	0	0	0	1	1	1	1
1	0	1	1	1	0	1	0	0	1	0	0	0	1
1	0	1	1	1	0	1	0	0	1	0	0	1	1
1	0	1	1	1	0	1	0	0	1	0	1	0	1
1	0	1	1	1	0	1	0	0	1	0	1	1	1
1	0	1	1	1	0	1	0	0	1	1	0	0	1
1	0	1	1	1	0	1	0	0	1	1	0	1	1
1	0	1	1	1	0	1	0	0	1	1	1	0	1
1	0	1	1	1	0	1	0	0	1	1	1	1	1
1	0	1	1	1	0	1	0	1	0	0	0	0	1
1	0	1	1	1	0	1	0	1	0	0	0	1	1
1	0	1	1	1	0	1	0	1	0	0	1	0	1
1	0	1	1	1	0	1	0	1	0	0	1	1	1
1	0	1	1	1	0	1	0	1	0	1	0	0	1
1	0	1	1	1	0	1	0	1	0	1	0	1	1
1	0	1	1	1	0	1	0	1	0	1	1	0	1
1	0	1	1	1	0	1	0	1	0	1	1	1	1
1	0	1	1	1	0	1	0	1	1	0	0	0	1
1	0	1	1	1	0	1	0	1	1	0	0	1	1
1	0	1	1	1	0	1	0	1	1	0	1	0	1
1	0	1	1	1	0	1	0	1	1	0	1	1	1
1	0	1	1	1	0	1	0	1	1	1	0	0	1
1	0	1	1	1	0	1	0	1	1	1	0	1	1
1	0	1	1	1	0	1	0	1	1	1	1	0	1
1	0	1	1	1	0	1	0	1	1	1	1	1	1
1	0	1	1	1	0	1	1	0	0	0	0	0	1
1	0	1	1	1	0	1	1	0	0	0	0	1	1
1	0	1	1	1	0	1	1	0	0	0	1	0	1
1	0	1	1	1	0	1	1	0	0	0	1	1	1
1	0	1	1	1	0	1	1	0	0	1	0	0	1
1	0	1	1	1	0	1	1	0	0	1	0	1	1
1	0	1	1	1	0	1	1	0	0	1	1	0	1
1	0	1	1	1	0	1	1	0	0	1	1	1	1
1	0	1	1	1	0	1	1	0	1	0	0	0	1

1	0	1	1	1	0	1	1	0	1	0	0	1	1
1	0	1	1	1	0	1	1	0	1	0	1	0	1
1	0	1	1	1	0	1	1	0	1	0	1	1	1
1	0	1	1	1	0	1	1	0	1	1	0	0	1
1	0	1	1	1	0	1	1	0	1	1	0	1	1
1	0	1	1	1	0	1	1	0	1	1	1	0	1
1	0	1	1	1	0	1	1	0	1	1	1	1	1
1	0	1	1	1	0	1	1	1	0	0	0	0	1
1	0	1	1	1	0	1	1	1	0	0	0	1	1
1	0	1	1	1	0	1	1	1	0	0	1	0	1
1	0	1	1	1	0	1	1	1	0	0	1	1	1
1	0	1	1	1	0	1	1	1	0	1	0	0	1
1	0	1	1	1	0	1	1	1	0	1	0	1	1
1	0	1	1	1	0	1	1	1	0	1	1	0	1
1	0	1	1	1	0	1	1	1	0	1	1	1	1
1	0	1	1	1	0	1	1	1	1	0	0	0	1
1	0	1	1	1	0	1	1	1	1	0	0	1	1
1	0	1	1	1	0	1	1	1	1	0	1	0	1
1	0	1	1	1	0	1	1	1	1	0	1	1	1
1	0	1	1	1	0	1	1	1	1	1	0	0	1
1	0	1	1	1	0	1	1	1	1	1	0	1	1
1	0	1	1	1	0	1	1	1	1	1	1	0	1
1	0	1	1	1	0	1	1	1	1	1	1	1	1
1	0	1	1	1	1	0	0	0	0	0	0	0	1
1	0	1	1	1	1	0	0	0	0	0	0	1	1
1	0	1	1	1	1	0	0	0	0	0	1	0	1
1	0	1	1	1	1	0	0	0	0	0	1	1	1
1	0	1	1	1	1	0	0	0	0	1	0	0	1
1	0	1	1	1	1	0	0	0	0	1	0	1	1
1	0	1	1	1	1	0	0	0	0	1	1	0	1
1	0	1	1	1	1	0	0	0	0	1	1	1	1
1	0	1	1	1	1	0	0	0	1	0	0	0	1
1	0	1	1	1	1	0	0	0	1	0	0	1	1
1	0	1	1	1	1	0	0	0	1	0	1	0	1
1	0	1	1	1	1	0	0	0	1	0	1	1	1
1	0	1	1	1	1	0	0	0	1	1	0	0	1
1	0	1	1	1	1	0	0	0	1	1	0	1	1
1	0	1	1	1	1	0	0	0	1	1	1	0	1
1	0	1	1	1	1	0	0	0	1	1	1	1	1
1	0	1	1	1	1	0	0	1	0	0	0	0	1
1	0	1	1	1	1	0	0	1	0	0	0	1	1
1	0	1	1	1	1	0	0	1	0	0	1	0	1
1	0	1	1	1	1	0	0	1	0	0	1	1	1
1	0	1	1	1	1	0	0	1	0	1	0	0	1
1	0	1	1	1	1	0	0	1	0	1	0	1	1
1	0	1	1	1	1	0	0	1	0	1	1	0	1

1	0	1	1	1	1	0	0	1	0	1	1	1	1
1	0	1	1	1	1	0	0	1	1	0	0	0	1
1	0	1	1	1	1	0	0	1	1	0	0	1	1
1	0	1	1	1	1	0	0	1	1	0	1	0	1
1	0	1	1	1	1	0	0	1	1	0	1	1	1
1	0	1	1	1	1	0	0	1	1	1	0	0	1
1	0	1	1	1	1	0	0	1	1	1	0	1	1
1	0	1	1	1	1	0	0	1	1	1	1	0	1
1	0	1	1	1	1	0	0	1	1	1	1	1	1
1	0	1	1	1	1	0	1	0	0	0	0	0	1
1	0	1	1	1	1	0	1	0	0	0	0	1	1
1	0	1	1	1	1	0	1	0	0	0	1	0	1
1	0	1	1	1	1	0	1	0	0	0	1	1	1
1	0	1	1	1	1	0	1	0	0	1	0	0	1
1	0	1	1	1	1	0	1	0	0	1	0	1	1
1	0	1	1	1	1	0	1	0	0	1	1	0	1
1	0	1	1	1	1	0	1	0	0	1	1	1	1
1	0	1	1	1	1	0	1	0	1	0	0	0	1
1	0	1	1	1	1	0	1	0	1	0	0	1	1
1	0	1	1	1	1	0	1	0	1	0	1	0	1
1	0	1	1	1	1	0	1	0	1	0	1	1	1
1	0	1	1	1	1	0	1	0	1	1	0	0	1
1	0	1	1	1	1	0	1	0	1	1	0	1	1
1	0	1	1	1	1	0	1	0	1	1	1	0	1
1	0	1	1	1	1	0	1	0	1	1	1	1	1
1	0	1	1	1	1	0	1	1	0	0	0	0	1
1	0	1	1	1	1	0	1	1	0	0	0	1	1
1	0	1	1	1	1	0	1	1	0	0	1	0	1
1	0	1	1	1	1	0	1	1	0	0	1	1	1
1	0	1	1	1	1	0	1	1	0	1	0	0	1
1	0	1	1	1	1	0	1	1	0	1	0	1	1
1	0	1	1	1	1	0	1	1	0	1	1	0	1
1	0	1	1	1	1	0	1	1	0	1	1	1	1
1	0	1	1	1	1	0	1	1	1	0	0	0	1
1	0	1	1	1	1	0	1	1	1	0	0	1	1
1	0	1	1	1	1	0	1	1	1	0	1	0	1
1	0	1	1	1	1	0	1	1	1	0	1	1	1
1	0	1	1	1	1	0	1	1	1	1	0	0	1
1	0	1	1	1	1	0	1	1	1	1	0	1	1
1	0	1	1	1	1	0	1	1	1	1	1	0	1
1	0	1	1	1	1	0	1	1	1	1	1	1	1
1	0	1	1	1	1	1	0	0	0	0	0	0	1
1	0	1	1	1	1	1	0	0	0	0	0	1	1
1	0	1	1	1	1	1	0	0	0	0	1	0	1
1	0	1	1	1	1	1	0	0	0	0	1	1	1
1	0	1	1	1	1	1	0	0	0	1	0	0	1

1	0	1	1	1	1	1	0	0	0	1	0	1	1
1	0	1	1	1	1	1	0	0	0	1	1	0	1
1	0	1	1	1	1	1	0	0	0	1	1	1	1
1	0	1	1	1	1	1	0	0	1	0	0	0	1
1	0	1	1	1	1	1	0	0	1	0	0	1	1
1	0	1	1	1	1	1	0	0	1	0	1	0	1
1	0	1	1	1	1	1	0	0	1	0	1	1	1
1	0	1	1	1	1	1	0	0	1	1	0	0	1
1	0	1	1	1	1	1	0	0	1	1	0	1	1
1	0	1	1	1	1	1	0	0	1	1	1	0	1
1	0	1	1	1	1	1	0	0	1	1	1	1	1
1	0	1	1	1	1	1	0	1	0	0	0	0	1
1	0	1	1	1	1	1	0	1	0	0	0	1	1
1	0	1	1	1	1	1	0	1	0	0	1	0	1
1	0	1	1	1	1	1	0	1	0	0	1	1	1
1	0	1	1	1	1	1	0	1	0	1	0	0	1
1	0	1	1	1	1	1	0	1	0	1	0	1	1
1	0	1	1	1	1	1	0	1	0	1	1	0	1
1	0	1	1	1	1	1	0	1	0	1	1	1	1
1	0	1	1	1	1	1	0	1	1	0	0	0	1
1	0	1	1	1	1	1	0	1	1	0	0	1	1
1	0	1	1	1	1	1	0	1	1	0	1	0	1
1	0	1	1	1	1	1	0	1	1	0	1	1	1
1	0	1	1	1	1	1	0	1	1	1	0	0	1
1	0	1	1	1	1	1	0	1	1	1	0	1	1
1	0	1	1	1	1	1	0	1	1	1	1	0	1
1	0	1	1	1	1	1	0	1	1	1	1	1	1
1	0	1	1	1	1	1	1	0	0	1	0	0	1
1	0	1	1	1	1	1	1	0	0	0	0	1	1
1	0	1	1	1	1	1	1	0	0	0	1	0	1
1	0	1	1	1	1	1	1	0	0	0	1	1	1
1	0	1	1	1	1	1	1	0	0	0	0	0	1
1	0	1	1	1	1	1	1	0	0	1	0	1	1
1	0	1	1	1	1	1	1	0	0	1	1	0	1
1	0	1	1	1	1	1	1	0	0	1	1	1	1
1	0	1	1	1	1	1	1	0	1	1	0	0	1
1	0	1	1	1	1	1	1	0	1	0	0	1	1
1	0	1	1	1	1	1	1	0	1	0	1	0	1
1	0	1	1	1	1	1	1	0	1	0	1	1	1
1	0	1	1	1	1	1	1	0	1	0	0	0	1
1	0	1	1	1	1	1	1	0	1	1	0	1	1
1	0	1	1	1	1	1	1	0	1	1	1	0	1
1	0	1	1	1	1	1	1	0	1	1	1	1	1
1	0	1	1	1	1	1	1	1	0	1	0	0	1
1	0	1	1	1	1	1	1	1	0	0	0	1	1
1	0	1	1	1	1	1	1	1	0	0	1	0	1

1	0	1	1	1	1	1	1	1	0	0	1	1	1
1	0	1	1	1	1	1	1	1	0	0	0	0	1
1	0	1	1	1	1	1	1	1	0	1	0	1	1
1	0	1	1	1	1	1	1	1	0	1	1	0	1
1	0	1	1	1	1	1	1	1	0	1	1	1	1
1	0	1	1	1	1	1	1	1	1	1	0	0	1
1	0	1	1	1	1	1	1	1	1	0	0	1	1
1	0	1	1	1	1	1	1	1	1	0	1	0	1
1	0	1	1	1	1	1	1	1	1	0	1	1	1
1	0	1	1	1	1	1	1	1	1	0	0	0	1
1	0	1	1	1	1	1	1	1	1	1	0	1	1
1	0	1	1	1	1	1	1	1	1	1	1	0	1
1	0	1	1	1	1	1	1	1	1	1	1	1	1
1	1	0	0	0	0	0	0	0	0	0	0	0	1
1	1	0	0	0	0	0	0	0	0	0	0	1	1
1	1	0	0	0	0	0	0	0	0	0	1	0	1
1	1	0	0	0	0	0	0	0	0	0	1	1	1
1	1	0	0	0	0	0	0	0	0	1	0	0	1
1	1	0	0	0	0	0	0	0	0	1	0	1	1
1	1	0	0	0	0	0	0	0	0	1	1	0	1
1	1	0	0	0	0	0	0	0	0	1	1	1	1
1	1	0	0	0	0	0	0	0	1	0	0	0	1
1	1	0	0	0	0	0	0	0	1	0	0	1	1
1	1	0	0	0	0	0	0	0	1	0	1	0	1
1	1	0	0	0	0	0	0	0	1	0	1	1	1
1	1	0	0	0	0	0	0	0	1	1	0	0	1
1	1	0	0	0	0	0	0	0	1	1	0	1	1
1	1	0	0	0	0	0	0	0	1	1	1	0	1
1	1	0	0	0	0	0	0	0	1	1	1	1	1
1	1	0	0	0	0	0	0	1	0	0	0	0	1
1	1	0	0	0	0	0	0	1	0	0	0	1	1
1	1	0	0	0	0	0	0	1	0	0	1	0	1
1	1	0	0	0	0	0	0	1	0	0	1	1	1
1	1	0	0	0	0	0	0	1	0	1	0	0	1
1	1	0	0	0	0	0	0	1	0	1	0	1	1
1	1	0	0	0	0	0	0	1	0	1	1	0	1
1	1	0	0	0	0	0	0	1	0	1	1	1	1
1	1	0	0	0	0	0	0	1	1	0	0	0	1
1	1	0	0	0	0	0	0	1	1	0	0	1	1
1	1	0	0	0	0	0	0	1	1	0	1	0	1
1	1	0	0	0	0	0	0	1	1	0	1	1	1
1	1	0	0	0	0	0	0	1	1	1	0	0	1
1	1	0	0	0	0	0	0	1	1	1	0	1	1
1	1	0	0	0	0	0	0	1	1	1	1	0	1
1	1	0	0	0	0	0	0	1	1	1	1	1	1
1	1	0	0	0	0	0	1	0	0	0	0	0	1

1	1	0	0	0	0	0	1	0	0	0	0	1	1
1	1	0	0	0	0	0	1	0	0	0	1	0	1
1	1	0	0	0	0	0	1	0	0	0	1	1	1
1	1	0	0	0	0	0	1	0	0	1	0	0	1
1	1	0	0	0	0	0	1	0	0	1	0	1	1
1	1	0	0	0	0	0	1	0	0	1	1	0	1
1	1	0	0	0	0	0	1	0	0	1	1	1	1
1	1	0	0	0	0	0	1	0	1	0	0	0	1
1	1	0	0	0	0	0	1	0	1	0	0	1	1
1	1	0	0	0	0	0	1	0	1	0	1	0	1
1	1	0	0	0	0	0	1	0	1	0	1	1	1
1	1	0	0	0	0	0	1	0	1	1	0	0	1
1	1	0	0	0	0	0	1	0	1	1	0	1	1
1	1	0	0	0	0	0	1	0	1	1	1	0	1
1	1	0	0	0	0	0	1	0	1	1	1	1	1
1	1	0	0	0	0	0	1	1	0	0	0	0	1
1	1	0	0	0	0	0	1	1	0	0	0	1	1
1	1	0	0	0	0	0	1	1	0	0	1	0	1
1	1	0	0	0	0	0	1	1	0	0	1	1	1
1	1	0	0	0	0	0	1	1	0	1	0	0	1
1	1	0	0	0	0	0	1	1	0	1	0	1	1
1	1	0	0	0	0	0	1	1	0	1	1	0	1
1	1	0	0	0	0	0	1	1	0	1	1	1	1
1	1	0	0	0	0	0	1	1	1	0	0	0	1
1	1	0	0	0	0	0	1	1	1	0	0	1	1
1	1	0	0	0	0	0	1	1	1	0	1	0	1
1	1	0	0	0	0	0	1	1	1	0	1	1	1
1	1	0	0	0	0	0	1	1	1	1	0	0	1
1	1	0	0	0	0	0	1	1	1	1	0	1	1
1	1	0	0	0	0	0	1	1	1	1	1	0	1
1	1	0	0	0	0	0	1	1	1	1	1	1	1
1	1	0	0	0	0	1	0	0	0	0	0	0	1
1	1	0	0	0	0	1	0	0	0	0	0	1	1
1	1	0	0	0	0	1	0	0	0	0	1	0	1
1	1	0	0	0	0	1	0	0	0	0	1	1	1
1	1	0	0	0	0	1	0	0	0	1	0	0	1
1	1	0	0	0	0	1	0	0	0	1	0	1	1
1	1	0	0	0	0	1	0	0	0	1	1	0	1
1	1	0	0	0	0	1	0	0	0	1	1	1	1
1	1	0	0	0	0	1	0	0	1	0	0	0	1
1	1	0	0	0	0	1	0	0	1	0	0	1	1
1	1	0	0	0	0	1	0	0	1	0	1	0	1
1	1	0	0	0	0	1	0	0	1	0	1	1	1
1	1	0	0	0	0	1	0	0	1	1	0	0	1
1	1	0	0	0	0	1	0	0	1	1	0	1	1
1	1	0	0	0	0	1	0	0	1	1	1	0	1

1	1	0	0	0	0	1	0	0	1	1	1	1	1
1	1	0	0	0	0	1	0	1	0	0	0	0	1
1	1	0	0	0	0	1	0	1	0	0	0	1	1
1	1	0	0	0	0	1	0	1	0	0	1	0	1
1	1	0	0	0	0	1	0	1	0	0	1	1	1
1	1	0	0	0	0	1	0	1	0	1	0	0	1
1	1	0	0	0	0	1	0	1	0	1	0	1	1
1	1	0	0	0	0	1	0	1	0	1	1	0	1
1	1	0	0	0	0	1	0	1	0	1	1	1	1
1	1	0	0	0	0	1	0	1	1	0	0	0	1
1	1	0	0	0	0	1	0	1	1	0	0	1	1
1	1	0	0	0	0	1	0	1	1	0	1	0	1
1	1	0	0	0	0	1	0	1	1	0	1	1	1
1	1	0	0	0	0	1	0	1	1	1	0	0	1
1	1	0	0	0	0	1	0	1	1	1	0	1	1
1	1	0	0	0	0	1	0	1	1	1	1	0	1
1	1	0	0	0	0	1	0	1	1	1	1	1	1
1	1	0	0	0	0	1	1	0	0	0	0	0	1
1	1	0	0	0	0	1	1	0	0	0	0	1	1
1	1	0	0	0	0	1	1	0	0	0	1	0	1
1	1	0	0	0	0	1	1	0	0	0	1	1	1
1	1	0	0	0	0	1	1	0	0	1	0	0	1
1	1	0	0	0	0	1	1	0	0	1	0	1	1
1	1	0	0	0	0	1	1	0	0	1	1	0	1
1	1	0	0	0	0	1	1	0	0	1	1	1	1
1	1	0	0	0	0	1	1	0	1	0	0	0	1
1	1	0	0	0	0	1	1	0	1	0	0	1	1
1	1	0	0	0	0	1	1	0	1	0	1	0	1
1	1	0	0	0	0	1	1	0	1	0	1	1	1
1	1	0	0	0	0	1	1	0	1	1	0	0	1
1	1	0	0	0	0	1	1	0	1	1	0	1	1
1	1	0	0	0	0	1	1	0	1	1	1	0	1
1	1	0	0	0	0	1	1	0	1	1	1	1	1
1	1	0	0	0	0	1	1	1	0	0	0	0	1
1	1	0	0	0	0	1	1	1	0	0	0	1	1
1	1	0	0	0	0	1	1	1	0	0	1	0	1
1	1	0	0	0	0	1	1	1	0	0	1	1	1
1	1	0	0	0	0	1	1	1	0	1	0	0	1
1	1	0	0	0	0	1	1	1	0	1	0	1	1
1	1	0	0	0	0	1	1	1	0	1	1	0	1
1	1	0	0	0	0	1	1	1	0	1	1	1	1
1	1	0	0	0	0	1	1	1	1	0	0	0	1
1	1	0	0	0	0	1	1	1	1	0	0	1	1
1	1	0	0	0	0	1	1	1	1	0	1	0	1
1	1	0	0	0	0	1	1	1	1	0	1	1	1
1	1	0	0	0	0	1	1	1	1	1	0	0	1

1	1	0	0	0	0	1	1	1	1	1	0	1	1
1	1	0	0	0	0	1	1	1	1	1	1	0	1
1	1	0	0	0	0	1	1	1	1	1	1	1	1
1	1	0	0	0	1	0	0	0	0	0	0	0	1
1	1	0	0	0	1	0	0	0	0	0	0	1	1
1	1	0	0	0	1	0	0	0	0	0	1	0	1
1	1	0	0	0	1	0	0	0	0	0	1	1	1
1	1	0	0	0	1	0	0	0	0	1	0	0	1
1	1	0	0	0	1	0	0	0	0	1	0	1	1
1	1	0	0	0	1	0	0	0	0	1	1	0	1
1	1	0	0	0	1	0	0	0	0	1	1	1	1
1	1	0	0	0	1	0	0	0	1	0	0	0	1
1	1	0	0	0	1	0	0	0	1	0	0	1	1
1	1	0	0	0	1	0	0	0	1	0	1	0	1
1	1	0	0	0	1	0	0	0	1	0	1	1	1
1	1	0	0	0	1	0	0	0	1	1	0	0	1
1	1	0	0	0	1	0	0	0	1	1	0	1	1
1	1	0	0	0	1	0	0	0	1	1	1	0	1
1	1	0	0	0	1	0	0	0	1	1	1	1	1
1	1	0	0	0	1	0	0	1	0	0	0	0	1
1	1	0	0	0	1	0	0	1	0	0	0	1	1
1	1	0	0	0	1	0	0	1	0	0	1	0	1
1	1	0	0	0	1	0	0	1	0	0	1	1	1
1	1	0	0	0	1	0	0	1	0	1	0	0	1
1	1	0	0	0	1	0	0	1	0	1	0	1	1
1	1	0	0	0	1	0	0	1	0	1	1	0	1
1	1	0	0	0	1	0	0	1	0	1	1	1	1
1	1	0	0	0	1	0	0	1	1	0	0	0	1
1	1	0	0	0	1	0	0	1	1	0	0	1	1
1	1	0	0	0	1	0	0	1	1	0	1	0	1
1	1	0	0	0	1	0	0	1	1	0	1	1	1
1	1	0	0	0	1	0	0	1	1	1	0	0	1
1	1	0	0	0	1	0	0	1	1	1	0	1	1
1	1	0	0	0	1	0	0	1	1	1	1	0	1
1	1	0	0	0	1	0	0	1	1	1	1	1	1
1	1	0	0	0	1	0	1	0	0	0	0	0	1
1	1	0	0	0	1	0	1	0	0	0	0	1	1
1	1	0	0	0	1	0	1	0	0	0	1	0	1
1	1	0	0	0	1	0	1	0	0	0	1	1	1
1	1	0	0	0	1	0	1	0	0	1	0	0	1
1	1	0	0	0	1	0	1	0	0	1	0	1	1
1	1	0	0	0	1	0	1	0	0	1	1	0	1
1	1	0	0	0	1	0	1	0	0	1	1	1	1
1	1	0	0	0	1	0	1	0	1	0	0	0	1
1	1	0	0	0	1	0	1	0	1	0	0	1	1
1	1	0	0	0	1	0	1	0	1	0	1	0	1

1	1	0	0	0	1	0	1	0	1	0	1	1	1
1	1	0	0	0	1	0	1	0	1	1	0	0	1
1	1	0	0	0	1	0	1	0	1	1	0	1	1
1	1	0	0	0	1	0	1	0	1	1	1	0	1
1	1	0	0	0	1	0	1	0	1	1	1	1	1
1	1	0	0	0	1	0	1	1	0	0	0	0	1
1	1	0	0	0	1	0	1	1	0	0	0	1	1
1	1	0	0	0	1	0	1	1	0	0	1	0	1
1	1	0	0	0	1	0	1	1	0	0	1	1	1
1	1	0	0	0	1	0	1	1	0	1	0	0	1
1	1	0	0	0	1	0	1	1	0	1	0	1	1
1	1	0	0	0	1	0	1	1	0	1	1	0	1
1	1	0	0	0	1	0	1	1	0	1	1	1	1
1	1	0	0	0	1	0	1	1	1	0	0	0	1
1	1	0	0	0	1	0	1	1	1	0	0	1	1
1	1	0	0	0	1	0	1	1	1	0	1	0	1
1	1	0	0	0	1	0	1	1	1	0	1	1	1
1	1	0	0	0	1	0	1	1	1	1	0	0	1
1	1	0	0	0	1	0	1	1	1	1	0	1	1
1	1	0	0	0	1	0	1	1	1	1	1	0	1
1	1	0	0	0	1	0	1	1	1	1	1	1	1
1	1	0	0	0	1	1	0	0	0	0	0	0	1
1	1	0	0	0	1	1	0	0	0	0	0	1	1
1	1	0	0	0	1	1	0	0	0	0	1	0	1
1	1	0	0	0	1	1	0	0	0	0	1	1	1
1	1	0	0	0	1	1	0	0	0	1	0	0	1
1	1	0	0	0	1	1	0	0	0	1	0	1	1
1	1	0	0	0	1	1	0	0	0	1	1	0	1
1	1	0	0	0	1	1	0	0	0	1	1	1	1
1	1	0	0	0	1	1	0	0	1	0	0	0	1
1	1	0	0	0	1	1	0	0	1	0	0	1	1
1	1	0	0	0	1	1	0	0	1	0	1	0	1
1	1	0	0	0	1	1	0	0	1	0	1	1	1
1	1	0	0	0	1	1	0	0	1	1	0	0	1
1	1	0	0	0	1	1	0	0	1	1	0	1	1
1	1	0	0	0	1	1	0	0	1	1	1	0	1
1	1	0	0	0	1	1	0	0	1	1	1	1	1
1	1	0	0	0	1	1	0	1	0	0	0	0	1
1	1	0	0	0	1	1	0	1	0	0	0	1	1
1	1	0	0	0	1	1	0	1	0	0	1	0	1
1	1	0	0	0	1	1	0	1	0	0	1	1	1
1	1	0	0	0	1	1	0	1	0	1	0	0	1
1	1	0	0	0	1	1	0	1	0	1	0	1	1
1	1	0	0	0	1	1	0	1	0	1	1	0	1
1	1	0	0	0	1	1	0	1	0	1	1	1	1
1	1	0	0	0	1	1	0	1	1	0	0	0	1

1	1	0	0	0	1	1	0	1	1	0	0	1	1
1	1	0	0	0	1	1	0	1	1	0	1	0	1
1	1	0	0	0	1	1	0	1	1	0	1	1	1
1	1	0	0	0	1	1	0	1	1	1	0	0	1
1	1	0	0	0	1	1	0	1	1	1	0	1	1
1	1	0	0	0	1	1	0	1	1	1	1	0	1
1	1	0	0	0	1	1	0	1	1	1	1	1	1
1	1	0	0	0	1	1	1	0	0	1	0	0	1
1	1	0	0	0	1	1	1	0	0	0	0	1	1
1	1	0	0	0	1	1	1	0	0	0	1	0	1
1	1	0	0	0	1	1	1	0	0	0	1	1	1
1	1	0	0	0	1	1	1	0	0	0	0	0	1
1	1	0	0	0	1	1	1	0	0	1	0	1	1
1	1	0	0	0	1	1	1	0	0	1	1	0	1
1	1	0	0	0	1	1	1	0	0	1	1	1	1
1	1	0	0	0	1	1	1	0	1	1	0	0	1
1	1	0	0	0	1	1	1	0	1	0	0	1	1
1	1	0	0	0	1	1	1	0	1	0	1	0	1
1	1	0	0	0	1	1	1	0	1	0	1	1	1
1	1	0	0	0	1	1	1	0	1	0	0	0	1
1	1	0	0	0	1	1	1	0	1	1	0	1	1
1	1	0	0	0	1	1	1	0	1	1	1	0	1
1	1	0	0	0	1	1	1	0	1	1	1	1	1
1	1	0	0	0	1	1	1	1	0	1	0	0	1
1	1	0	0	0	1	1	1	1	0	0	0	1	1
1	1	0	0	0	1	1	1	1	0	0	1	0	1
1	1	0	0	0	1	1	1	1	0	0	1	1	1
1	1	0	0	0	1	1	1	1	0	0	0	0	1
1	1	0	0	0	1	1	1	1	0	1	0	1	1
1	1	0	0	0	1	1	1	1	0	1	1	0	1
1	1	0	0	0	1	1	1	1	0	1	1	1	1
1	1	0	0	0	1	1	1	1	1	1	0	0	1
1	1	0	0	0	1	1	1	1	1	0	0	1	1
1	1	0	0	0	1	1	1	1	1	0	1	0	1
1	1	0	0	0	1	1	1	1	1	0	1	1	1
1	1	0	0	0	1	1	1	1	1	0	0	0	1
1	1	0	0	0	1	1	1	1	1	1	0	1	1
1	1	0	0	0	1	1	1	1	1	1	1	0	1
1	1	0	0	0	1	1	1	1	1	1	1	1	1
1	1	0	0	1	0	0	0	0	0	0	0	0	1
1	1	0	0	1	0	0	0	0	0	0	0	1	1
1	1	0	0	1	0	0	0	0	0	0	1	0	1
1	1	0	0	1	0	0	0	0	0	0	1	1	1
1	1	0	0	1	0	0	0	0	0	1	0	0	1
1	1	0	0	1	0	0	0	0	0	1	0	1	1
1	1	0	0	1	0	0	0	0	0	1	1	0	1

1	1	0	0	1	0	0	0	0	0	1	1	1	1
1	1	0	0	1	0	0	0	0	1	0	0	0	1
1	1	0	0	1	0	0	0	0	1	0	0	1	1
1	1	0	0	1	0	0	0	0	1	0	1	0	1
1	1	0	0	1	0	0	0	0	1	0	1	1	1
1	1	0	0	1	0	0	0	0	1	1	0	0	1
1	1	0	0	1	0	0	0	0	1	1	0	1	1
1	1	0	0	1	0	0	0	0	1	1	1	0	1
1	1	0	0	1	0	0	0	0	1	1	1	1	1
1	1	0	0	1	0	0	0	1	0	0	0	0	1
1	1	0	0	1	0	0	0	1	0	0	0	1	1
1	1	0	0	1	0	0	0	1	0	0	1	0	1
1	1	0	0	1	0	0	0	1	0	0	1	1	1
1	1	0	0	1	0	0	0	1	0	1	0	0	1
1	1	0	0	1	0	0	0	1	0	1	0	1	1
1	1	0	0	1	0	0	0	1	0	1	1	0	1
1	1	0	0	1	0	0	0	1	0	1	1	1	1
1	1	0	0	1	0	0	0	1	1	0	0	0	1
1	1	0	0	1	0	0	0	1	1	0	0	1	1
1	1	0	0	1	0	0	0	1	1	0	1	0	1
1	1	0	0	1	0	0	0	1	1	0	1	1	1
1	1	0	0	1	0	0	0	1	1	1	0	0	1
1	1	0	0	1	0	0	0	1	1	1	0	1	1
1	1	0	0	1	0	0	0	1	1	1	1	0	1
1	1	0	0	1	0	0	0	1	1	1	1	1	1
1	1	0	0	1	0	0	1	0	0	0	0	0	1
1	1	0	0	1	0	0	1	0	0	0	0	1	1
1	1	0	0	1	0	0	1	0	0	0	1	0	1
1	1	0	0	1	0	0	1	0	0	0	1	1	1
1	1	0	0	1	0	0	1	0	0	1	0	0	1
1	1	0	0	1	0	0	1	0	0	1	0	1	1
1	1	0	0	1	0	0	1	0	0	1	1	0	1
1	1	0	0	1	0	0	1	0	0	1	1	1	1
1	1	0	0	1	0	0	1	0	1	0	0	0	1
1	1	0	0	1	0	0	1	0	1	0	0	1	1
1	1	0	0	1	0	0	1	0	1	0	1	0	1
1	1	0	0	1	0	0	1	0	1	0	1	1	1
1	1	0	0	1	0	0	1	0	1	1	0	0	1
1	1	0	0	1	0	0	1	0	1	1	0	1	1
1	1	0	0	1	0	0	1	0	1	1	1	0	1
1	1	0	0	1	0	0	1	0	1	1	1	1	1
1	1	0	0	1	0	0	1	1	0	0	0	0	1
1	1	0	0	1	0	0	1	1	0	0	0	1	1
1	1	0	0	1	0	0	1	1	0	0	1	0	1
1	1	0	0	1	0	0	1	1	0	0	1	1	1
1	1	0	0	1	0	0	1	1	0	1	0	0	1

1	1	0	0	1	0	0	1	1	0	1	0	1	1
1	1	0	0	1	0	0	1	1	0	1	1	0	1
1	1	0	0	1	0	0	1	1	0	1	1	1	1
1	1	0	0	1	0	0	1	1	1	0	0	0	1
1	1	0	0	1	0	0	1	1	1	0	0	1	1
1	1	0	0	1	0	0	1	1	1	0	1	0	1
1	1	0	0	1	0	0	1	1	1	0	1	1	1
1	1	0	0	1	0	0	1	1	1	1	0	0	1
1	1	0	0	1	0	0	1	1	1	1	0	1	1
1	1	0	0	1	0	0	1	1	1	1	1	0	1
1	1	0	0	1	0	0	1	1	1	1	1	1	1
1	1	0	0	1	0	1	0	0	0	0	0	0	1
1	1	0	0	1	0	1	0	0	0	0	0	1	1
1	1	0	0	1	0	1	0	0	0	0	1	0	1
1	1	0	0	1	0	1	0	0	0	0	1	1	1
1	1	0	0	1	0	1	0	0	0	1	0	0	1
1	1	0	0	1	0	1	0	0	0	1	0	1	1
1	1	0	0	1	0	1	0	0	0	1	1	0	1
1	1	0	0	1	0	1	0	0	0	1	1	1	1
1	1	0	0	1	0	1	0	0	1	0	0	0	1
1	1	0	0	1	0	1	0	0	1	0	0	1	1
1	1	0	0	1	0	1	0	0	1	0	1	0	1
1	1	0	0	1	0	1	0	0	1	0	1	1	1
1	1	0	0	1	0	1	0	0	1	1	0	0	1
1	1	0	0	1	0	1	0	0	1	1	0	1	1
1	1	0	0	1	0	1	0	0	1	1	1	0	1
1	1	0	0	1	0	1	0	0	1	1	1	1	1
1	1	0	0	1	0	1	0	1	0	0	0	0	1
1	1	0	0	1	0	1	0	1	0	0	0	1	1
1	1	0	0	1	0	1	0	1	0	0	1	0	1
1	1	0	0	1	0	1	0	1	0	0	1	1	1
1	1	0	0	1	0	1	0	1	0	1	0	0	1
1	1	0	0	1	0	1	0	1	0	1	0	1	1
1	1	0	0	1	0	1	0	1	0	1	1	0	1
1	1	0	0	1	0	1	0	1	0	1	1	1	1
1	1	0	0	1	0	1	0	1	1	0	0	0	1
1	1	0	0	1	0	1	0	1	1	0	0	1	1
1	1	0	0	1	0	1	0	1	1	0	1	0	1
1	1	0	0	1	0	1	0	1	1	0	1	1	1
1	1	0	0	1	0	1	0	1	1	1	0	0	1
1	1	0	0	1	0	1	0	1	1	1	0	1	1
1	1	0	0	1	0	1	0	1	1	1	1	0	1
1	1	0	0	1	0	1	0	1	1	1	1	1	1
1	1	0	0	1	0	1	1	0	0	0	0	0	1
1	1	0	0	1	0	1	1	0	0	0	0	1	1
1	1	0	0	1	0	1	1	0	0	0	1	0	1

1	1	0	0	1	0	1	1	0	0	0	1	1	1
1	1	0	0	1	0	1	1	0	0	1	0	0	1
1	1	0	0	1	0	1	1	0	0	1	0	1	1
1	1	0	0	1	0	1	1	0	0	1	1	0	1
1	1	0	0	1	0	1	1	0	0	1	1	1	1
1	1	0	0	1	0	1	1	0	1	0	0	0	1
1	1	0	0	1	0	1	1	0	1	0	0	1	1
1	1	0	0	1	0	1	1	0	1	0	1	0	1
1	1	0	0	1	0	1	1	0	1	0	1	1	1
1	1	0	0	1	0	1	1	0	1	1	0	0	1
1	1	0	0	1	0	1	1	0	1	1	0	1	1
1	1	0	0	1	0	1	1	0	1	1	1	0	1
1	1	0	0	1	0	1	1	0	1	1	1	1	1
1	1	0	0	1	0	1	1	1	0	0	0	0	1
1	1	0	0	1	0	1	1	1	0	0	0	1	1
1	1	0	0	1	0	1	1	1	0	0	1	0	1
1	1	0	0	1	0	1	1	1	0	0	1	1	1
1	1	0	0	1	0	1	1	1	0	1	0	0	1
1	1	0	0	1	0	1	1	1	0	1	0	1	1
1	1	0	0	1	0	1	1	1	0	1	1	0	1
1	1	0	0	1	0	1	1	1	0	1	1	1	1
1	1	0	0	1	0	1	1	1	1	0	0	0	1
1	1	0	0	1	0	1	1	1	1	0	0	1	1
1	1	0	0	1	0	1	1	1	1	0	1	0	1
1	1	0	0	1	0	1	1	1	1	0	1	1	1
1	1	0	0	1	0	1	1	1	1	1	0	0	1
1	1	0	0	1	0	1	1	1	1	1	0	1	1
1	1	0	0	1	0	1	1	1	1	1	1	0	1
1	1	0	0	1	0	1	1	1	1	1	1	1	1
1	1	0	0	1	1	0	0	0	0	0	0	0	1
1	1	0	0	1	1	0	0	0	0	0	0	1	1
1	1	0	0	1	1	0	0	0	0	0	1	0	1
1	1	0	0	1	1	0	0	0	0	0	1	1	1
1	1	0	0	1	1	0	0	0	0	1	0	0	1
1	1	0	0	1	1	0	0	0	0	1	0	1	1
1	1	0	0	1	1	0	0	0	0	1	1	0	1
1	1	0	0	1	1	0	0	0	0	1	1	1	1
1	1	0	0	1	1	0	0	0	1	0	0	0	1
1	1	0	0	1	1	0	0	0	1	0	0	1	1
1	1	0	0	1	1	0	0	0	1	0	1	0	1
1	1	0	0	1	1	0	0	0	1	0	1	1	1
1	1	0	0	1	1	0	0	0	1	1	0	0	1
1	1	0	0	1	1	0	0	0	1	1	0	1	1
1	1	0	0	1	1	0	0	0	1	1	1	0	1
1	1	0	0	1	1	0	0	0	1	1	1	1	1
1	1	0	0	1	1	0	0	1	0	0	0	0	1

1	1	0	0	1	1	0	0	1	0	0	0	1	1
1	1	0	0	1	1	0	0	1	0	0	1	0	1
1	1	0	0	1	1	0	0	1	0	0	1	1	1
1	1	0	0	1	1	0	0	1	0	1	0	0	1
1	1	0	0	1	1	0	0	1	0	1	0	1	1
1	1	0	0	1	1	0	0	1	0	1	1	0	1
1	1	0	0	1	1	0	0	1	0	1	1	1	1
1	1	0	0	1	1	0	0	1	1	0	0	0	1
1	1	0	0	1	1	0	0	1	1	0	0	1	1
1	1	0	0	1	1	0	0	1	1	0	1	0	1
1	1	0	0	1	1	0	0	1	1	0	1	1	1
1	1	0	0	1	1	0	0	1	1	1	0	0	1
1	1	0	0	1	1	0	0	1	1	1	0	1	1
1	1	0	0	1	1	0	0	1	1	1	1	0	1
1	1	0	0	1	1	0	0	1	1	1	1	1	1
1	1	0	0	1	1	0	1	0	0	0	0	0	1
1	1	0	0	1	1	0	1	0	0	0	0	1	1
1	1	0	0	1	1	0	1	0	0	0	1	0	1
1	1	0	0	1	1	0	1	0	0	0	1	1	1
1	1	0	0	1	1	0	1	0	0	1	0	0	1
1	1	0	0	1	1	0	1	0	0	1	0	1	1
1	1	0	0	1	1	0	1	0	0	1	1	0	1
1	1	0	0	1	1	0	1	0	0	1	1	1	1
1	1	0	0	1	1	0	1	0	1	0	0	0	1
1	1	0	0	1	1	0	1	0	1	0	0	1	1
1	1	0	0	1	1	0	1	0	1	0	1	0	1
1	1	0	0	1	1	0	1	0	1	0	1	1	1
1	1	0	0	1	1	0	1	0	1	1	0	0	1
1	1	0	0	1	1	0	1	0	1	1	0	1	1
1	1	0	0	1	1	0	1	0	1	1	1	0	1
1	1	0	0	1	1	0	1	0	1	1	1	1	1
1	1	0	0	1	1	0	1	1	0	0	0	0	1
1	1	0	0	1	1	0	1	1	0	0	0	1	1
1	1	0	0	1	1	0	1	1	0	0	1	0	1
1	1	0	0	1	1	0	1	1	0	0	1	1	1
1	1	0	0	1	1	0	1	1	0	1	0	0	1
1	1	0	0	1	1	0	1	1	0	1	0	1	1
1	1	0	0	1	1	0	1	1	0	1	1	0	1
1	1	0	0	1	1	0	1	1	0	1	1	1	1
1	1	0	0	1	1	0	1	1	1	0	0	0	1
1	1	0	0	1	1	0	1	1	1	0	0	1	1
1	1	0	0	1	1	0	1	1	1	0	1	0	1
1	1	0	0	1	1	0	1	1	1	0	1	1	1
1	1	0	0	1	1	0	1	1	1	1	0	0	1
1	1	0	0	1	1	0	1	1	1	1	0	1	1
1	1	0	0	1	1	0	1	1	1	1	1	0	1

1	1	0	0	1	1	0	1	1	1	1	1	1	1
1	1	0	0	1	1	1	0	0	0	0	0	0	1
1	1	0	0	1	1	1	0	0	0	0	0	1	1
1	1	0	0	1	1	1	0	0	0	0	1	0	1
1	1	0	0	1	1	1	0	0	0	0	1	1	1
1	1	0	0	1	1	1	0	0	0	1	0	0	1
1	1	0	0	1	1	1	0	0	0	1	0	1	1
1	1	0	0	1	1	1	0	0	0	1	1	0	1
1	1	0	0	1	1	1	0	0	0	1	1	1	1
1	1	0	0	1	1	1	0	0	1	0	0	0	1
1	1	0	0	1	1	1	0	0	1	0	0	1	1
1	1	0	0	1	1	1	0	0	1	0	1	0	1
1	1	0	0	1	1	1	0	0	1	0	1	1	1
1	1	0	0	1	1	1	0	0	1	1	0	0	1
1	1	0	0	1	1	1	0	0	1	1	0	1	1
1	1	0	0	1	1	1	0	0	1	1	1	0	1
1	1	0	0	1	1	1	0	0	1	1	1	1	1
1	1	0	0	1	1	1	0	1	0	0	0	0	1
1	1	0	0	1	1	1	0	1	0	0	0	1	1
1	1	0	0	1	1	1	0	1	0	0	1	0	1
1	1	0	0	1	1	1	0	1	0	0	1	1	1
1	1	0	0	1	1	1	0	1	0	1	0	0	1
1	1	0	0	1	1	1	0	1	0	1	0	1	1
1	1	0	0	1	1	1	0	1	0	1	1	0	1
1	1	0	0	1	1	1	0	1	0	1	1	1	1
1	1	0	0	1	1	1	0	1	1	0	0	0	1
1	1	0	0	1	1	1	0	1	1	0	0	1	1
1	1	0	0	1	1	1	0	1	1	0	1	0	1
1	1	0	0	1	1	1	0	1	1	0	1	1	1
1	1	0	0	1	1	1	0	1	1	1	0	0	1
1	1	0	0	1	1	1	0	1	1	1	0	1	1
1	1	0	0	1	1	1	0	1	1	1	1	0	1
1	1	0	0	1	1	1	0	1	1	1	1	1	1
1	1	0	0	1	1	1	1	0	0	1	0	0	1
1	1	0	0	1	1	1	1	0	0	0	0	1	1
1	1	0	0	1	1	1	1	0	0	0	1	0	1
1	1	0	0	1	1	1	1	0	0	0	1	1	1
1	1	0	0	1	1	1	1	0	0	0	0	0	1
1	1	0	0	1	1	1	1	0	0	1	0	1	1
1	1	0	0	1	1	1	1	0	0	1	1	0	1
1	1	0	0	1	1	1	1	0	0	1	1	1	1
1	1	0	0	1	1	1	1	0	1	1	0	0	1
1	1	0	0	1	1	1	1	0	1	0	0	1	1
1	1	0	0	1	1	1	1	0	1	0	1	0	1
1	1	0	0	1	1	1	1	0	1	0	1	1	1
1	1	0	0	1	1	1	1	0	1	0	0	0	1

1	1	0	0	1	1	1	1	0	1	1	0	1	1
1	1	0	0	1	1	1	1	0	1	1	1	0	1
1	1	0	0	1	1	1	1	0	1	1	1	1	1
1	1	0	0	1	1	1	1	1	0	1	0	0	1
1	1	0	0	1	1	1	1	1	0	0	0	1	1
1	1	0	0	1	1	1	1	1	0	0	1	0	1
1	1	0	0	1	1	1	1	1	0	0	1	1	1
1	1	0	0	1	1	1	1	1	0	0	0	0	1
1	1	0	0	1	1	1	1	1	0	1	0	1	1
1	1	0	0	1	1	1	1	1	0	1	1	0	1
1	1	0	0	1	1	1	1	1	0	1	1	1	1
1	1	0	0	1	1	1	1	1	1	1	0	0	1
1	1	0	0	1	1	1	1	1	1	0	0	1	1
1	1	0	0	1	1	1	1	1	1	0	1	0	1
1	1	0	0	1	1	1	1	1	1	0	1	1	1
1	1	0	0	1	1	1	1	1	1	0	0	0	1
1	1	0	0	1	1	1	1	1	1	1	0	1	1
1	1	0	0	1	1	1	1	1	1	1	1	0	1
1	1	0	0	1	1	1	1	1	1	1	1	1	1
1	1	0	1	0	0	0	0	0	0	0	0	0	1
1	1	0	1	0	0	0	0	0	0	0	0	1	1
1	1	0	1	0	0	0	0	0	0	0	1	0	1
1	1	0	1	0	0	0	0	0	0	0	1	1	1
1	1	0	1	0	0	0	0	0	0	1	0	0	1
1	1	0	1	0	0	0	0	0	0	1	0	1	1
1	1	0	1	0	0	0	0	0	0	1	1	0	1
1	1	0	1	0	0	0	0	0	0	1	1	1	1
1	1	0	1	0	0	0	0	0	1	0	0	0	1
1	1	0	1	0	0	0	0	0	1	0	0	1	1
1	1	0	1	0	0	0	0	0	1	0	1	0	1
1	1	0	1	0	0	0	0	0	1	0	1	1	1
1	1	0	1	0	0	0	0	0	1	1	0	0	1
1	1	0	1	0	0	0	0	0	1	1	0	1	1
1	1	0	1	0	0	0	0	0	1	1	1	0	1
1	1	0	1	0	0	0	0	0	1	1	1	1	1
1	1	0	1	0	0	0	0	1	0	0	0	0	1
1	1	0	1	0	0	0	0	1	0	0	0	1	1
1	1	0	1	0	0	0	0	1	0	0	1	0	1
1	1	0	1	0	0	0	0	1	0	0	1	1	1
1	1	0	1	0	0	0	0	1	0	1	0	0	1
1	1	0	1	0	0	0	0	1	0	1	0	1	1
1	1	0	1	0	0	0	0	1	0	1	1	0	1
1	1	0	1	0	0	0	0	1	0	1	1	1	1
1	1	0	1	0	0	0	0	1	1	0	0	0	1
1	1	0	1	0	0	0	0	1	1	0	0	1	1
1	1	0	1	0	0	0	0	1	1	0	1	0	1

1	1	0	1	0	0	0	0	1	1	0	1	1	1
1	1	0	1	0	0	0	0	1	1	1	0	0	1
1	1	0	1	0	0	0	0	1	1	1	0	1	1
1	1	0	1	0	0	0	0	1	1	1	1	0	1
1	1	0	1	0	0	0	0	1	1	1	1	1	1
1	1	0	1	0	0	0	1	0	0	0	0	0	1
1	1	0	1	0	0	0	1	0	0	0	0	1	1
1	1	0	1	0	0	0	1	0	0	0	1	0	1
1	1	0	1	0	0	0	1	0	0	0	1	1	1
1	1	0	1	0	0	0	1	0	0	1	0	0	1
1	1	0	1	0	0	0	1	0	0	1	0	1	1
1	1	0	1	0	0	0	1	0	0	1	1	0	1
1	1	0	1	0	0	0	1	0	0	1	1	1	1
1	1	0	1	0	0	0	1	0	1	0	0	0	1
1	1	0	1	0	0	0	1	0	1	0	0	1	1
1	1	0	1	0	0	0	1	0	1	0	1	0	1
1	1	0	1	0	0	0	1	0	1	0	1	1	1
1	1	0	1	0	0	0	1	0	1	1	0	0	1
1	1	0	1	0	0	0	1	0	1	1	0	1	1
1	1	0	1	0	0	0	1	0	1	1	1	0	1
1	1	0	1	0	0	0	1	0	1	1	1	1	1
1	1	0	1	0	0	0	1	1	0	0	0	0	1
1	1	0	1	0	0	0	1	1	0	0	0	1	1
1	1	0	1	0	0	0	1	1	0	0	1	0	1
1	1	0	1	0	0	0	1	1	0	0	1	1	1
1	1	0	1	0	0	0	1	1	0	1	0	0	1
1	1	0	1	0	0	0	1	1	0	1	0	1	1
1	1	0	1	0	0	0	1	1	0	1	1	0	1
1	1	0	1	0	0	0	1	1	0	1	1	1	1
1	1	0	1	0	0	0	1	1	1	0	0	0	1
1	1	0	1	0	0	0	1	1	1	0	0	1	1
1	1	0	1	0	0	0	1	1	1	0	1	0	1
1	1	0	1	0	0	0	1	1	1	0	1	1	1
1	1	0	1	0	0	0	1	1	1	1	0	0	1
1	1	0	1	0	0	0	1	1	1	1	0	1	1
1	1	0	1	0	0	0	1	1	1	1	1	0	1
1	1	0	1	0	0	0	1	1	1	1	1	1	1
1	1	0	1	0	0	1	0	0	0	0	0	0	1
1	1	0	1	0	0	1	0	0	0	0	0	1	1
1	1	0	1	0	0	1	0	0	0	0	1	0	1
1	1	0	1	0	0	1	0	0	0	0	1	1	1
1	1	0	1	0	0	1	0	0	0	1	0	0	1
1	1	0	1	0	0	1	0	0	0	1	0	1	1
1	1	0	1	0	0	1	0	0	0	1	1	0	1
1	1	0	1	0	0	1	0	0	0	1	1	1	1
1	1	0	1	0	0	1	0	0	1	0	0	0	1

1	1	0	1	0	0	1	0	0	1	0	0	1	1
1	1	0	1	0	0	1	0	0	1	0	1	0	1
1	1	0	1	0	0	1	0	0	1	0	1	1	1
1	1	0	1	0	0	1	0	0	1	1	0	0	1
1	1	0	1	0	0	1	0	0	1	1	0	1	1
1	1	0	1	0	0	1	0	0	1	1	1	0	1
1	1	0	1	0	0	1	0	0	1	1	1	1	1
1	1	0	1	0	0	1	0	1	0	0	0	0	1
1	1	0	1	0	0	1	0	1	0	0	0	1	1
1	1	0	1	0	0	1	0	1	0	0	1	0	1
1	1	0	1	0	0	1	0	1	0	0	1	1	1
1	1	0	1	0	0	1	0	1	0	1	0	0	1
1	1	0	1	0	0	1	0	1	0	1	0	1	1
1	1	0	1	0	0	1	0	1	0	1	1	0	1
1	1	0	1	0	0	1	0	1	0	1	1	1	1
1	1	0	1	0	0	1	0	1	1	0	0	0	1
1	1	0	1	0	0	1	0	1	1	0	0	1	1
1	1	0	1	0	0	1	0	1	1	0	1	0	1
1	1	0	1	0	0	1	0	1	1	0	1	1	1
1	1	0	1	0	0	1	0	1	1	1	0	0	1
1	1	0	1	0	0	1	0	1	1	1	0	1	1
1	1	0	1	0	0	1	0	1	1	1	1	0	1
1	1	0	1	0	0	1	0	1	1	1	1	1	1
1	1	0	1	0	0	1	1	0	0	0	0	0	1
1	1	0	1	0	0	1	1	0	0	0	0	1	1
1	1	0	1	0	0	1	1	0	0	0	1	0	1
1	1	0	1	0	0	1	1	0	0	0	1	1	1
1	1	0	1	0	0	1	1	0	0	1	0	0	1
1	1	0	1	0	0	1	1	0	0	1	0	1	1
1	1	0	1	0	0	1	1	0	0	1	1	0	1
1	1	0	1	0	0	1	1	0	0	1	1	1	1
1	1	0	1	0	0	1	1	0	1	0	0	0	1
1	1	0	1	0	0	1	1	0	1	0	0	1	1
1	1	0	1	0	0	1	1	0	1	0	1	0	1
1	1	0	1	0	0	1	1	0	1	0	1	1	1
1	1	0	1	0	0	1	1	0	1	1	0	0	1
1	1	0	1	0	0	1	1	0	1	1	0	1	1
1	1	0	1	0	0	1	1	0	1	1	1	0	1
1	1	0	1	0	0	1	1	0	1	1	1	1	1
1	1	0	1	0	0	1	1	1	0	0	0	0	1
1	1	0	1	0	0	1	1	1	0	0	0	1	1
1	1	0	1	0	0	1	1	1	0	0	1	0	1
1	1	0	1	0	0	1	1	1	0	0	1	1	1
1	1	0	1	0	0	1	1	1	0	1	0	0	1
1	1	0	1	0	0	1	1	1	0	1	0	1	1
1	1	0	1	0	0	1	1	1	0	1	1	0	1

1	1	0	1	0	0	1	1	1	0	1	1	1	1
1	1	0	1	0	0	1	1	1	1	0	0	0	1
1	1	0	1	0	0	1	1	1	1	0	0	1	1
1	1	0	1	0	0	1	1	1	1	0	1	0	1
1	1	0	1	0	0	1	1	1	1	0	1	1	1
1	1	0	1	0	0	1	1	1	1	1	0	0	1
1	1	0	1	0	0	1	1	1	1	1	0	1	1
1	1	0	1	0	0	1	1	1	1	1	1	0	1
1	1	0	1	0	0	1	1	1	1	1	1	1	1
1	1	0	1	0	1	0	0	0	0	0	0	0	1
1	1	0	1	0	1	0	0	0	0	0	0	1	1
1	1	0	1	0	1	0	0	0	0	0	1	0	1
1	1	0	1	0	1	0	0	0	0	0	1	1	1
1	1	0	1	0	1	0	0	0	0	1	0	0	1
1	1	0	1	0	1	0	0	0	0	1	0	1	1
1	1	0	1	0	1	0	0	0	0	1	1	0	1
1	1	0	1	0	1	0	0	0	0	1	1	1	1
1	1	0	1	0	1	0	0	0	1	0	0	0	1
1	1	0	1	0	1	0	0	0	1	0	0	1	1
1	1	0	1	0	1	0	0	0	1	0	1	0	1
1	1	0	1	0	1	0	0	0	1	0	1	1	1
1	1	0	1	0	1	0	0	0	1	1	0	0	1
1	1	0	1	0	1	0	0	0	1	1	0	1	1
1	1	0	1	0	1	0	0	0	1	1	1	0	1
1	1	0	1	0	1	0	0	0	1	1	1	1	1
1	1	0	1	0	1	0	0	1	0	0	0	0	1
1	1	0	1	0	1	0	0	1	0	0	0	1	1
1	1	0	1	0	1	0	0	1	0	0	1	0	1
1	1	0	1	0	1	0	0	1	0	0	1	1	1
1	1	0	1	0	1	0	0	1	0	1	0	0	1
1	1	0	1	0	1	0	0	1	0	1	0	1	1
1	1	0	1	0	1	0	0	1	0	1	1	0	1
1	1	0	1	0	1	0	0	1	0	1	1	1	1
1	1	0	1	0	1	0	0	1	1	0	0	0	1
1	1	0	1	0	1	0	0	1	1	0	0	1	1
1	1	0	1	0	1	0	0	1	1	0	1	0	1
1	1	0	1	0	1	0	0	1	1	0	1	1	1
1	1	0	1	0	1	0	0	1	1	1	0	0	1
1	1	0	1	0	1	0	0	1	1	1	0	1	1
1	1	0	1	0	1	0	0	1	1	1	1	0	1
1	1	0	1	0	1	0	0	1	1	1	1	1	1
1	1	0	1	0	1	0	1	0	0	0	0	0	1
1	1	0	1	0	1	0	1	0	0	0	0	1	1
1	1	0	1	0	1	0	1	0	0	0	1	0	1
1	1	0	1	0	1	0	1	0	0	0	1	1	1
1	1	0	1	0	1	0	1	0	0	1	0	0	1

1	1	0	1	0	1	0	1	0	0	1	0	1	1
1	1	0	1	0	1	0	1	0	0	1	1	0	1
1	1	0	1	0	1	0	1	0	0	1	1	1	1
1	1	0	1	0	1	0	1	0	1	0	0	0	1
1	1	0	1	0	1	0	1	0	1	0	0	1	1
1	1	0	1	0	1	0	1	0	1	0	1	0	1
1	1	0	1	0	1	0	1	0	1	0	1	1	1
1	1	0	1	0	1	0	1	0	1	1	0	0	1
1	1	0	1	0	1	0	1	0	1	1	0	1	1
1	1	0	1	0	1	0	1	0	1	1	1	0	1
1	1	0	1	0	1	0	1	0	1	1	1	1	1
1	1	0	1	0	1	0	1	1	0	0	0	0	1
1	1	0	1	0	1	0	1	1	0	0	0	1	1
1	1	0	1	0	1	0	1	1	0	0	1	0	1
1	1	0	1	0	1	0	1	1	0	0	1	1	1
1	1	0	1	0	1	0	1	1	0	1	0	0	1
1	1	0	1	0	1	0	1	1	0	1	0	1	1
1	1	0	1	0	1	0	1	1	0	1	1	0	1
1	1	0	1	0	1	0	1	1	0	1	1	1	1
1	1	0	1	0	1	0	1	1	1	0	0	0	1
1	1	0	1	0	1	0	1	1	1	0	0	1	1
1	1	0	1	0	1	0	1	1	1	0	1	0	1
1	1	0	1	0	1	0	1	1	1	0	1	1	1
1	1	0	1	0	1	0	1	1	1	1	0	0	1
1	1	0	1	0	1	0	1	1	1	1	0	1	1
1	1	0	1	0	1	0	1	1	1	1	1	0	1
1	1	0	1	0	1	0	1	1	1	1	1	1	1
1	1	0	1	0	1	1	0	0	0	0	0	0	1
1	1	0	1	0	1	1	0	0	0	0	0	1	1
1	1	0	1	0	1	1	0	0	0	0	1	0	1
1	1	0	1	0	1	1	0	0	0	0	1	1	1
1	1	0	1	0	1	1	0	0	0	1	0	0	1
1	1	0	1	0	1	1	0	0	0	1	0	1	1
1	1	0	1	0	1	1	0	0	0	1	1	0	1
1	1	0	1	0	1	1	0	0	0	1	1	1	1
1	1	0	1	0	1	1	0	0	1	0	0	0	1
1	1	0	1	0	1	1	0	0	1	0	0	1	1
1	1	0	1	0	1	1	0	0	1	0	1	0	1
1	1	0	1	0	1	1	0	0	1	0	1	1	1
1	1	0	1	0	1	1	0	0	1	1	0	0	1
1	1	0	1	0	1	1	0	0	1	1	0	1	1
1	1	0	1	0	1	1	0	0	1	1	1	0	1
1	1	0	1	0	1	1	0	0	1	1	1	1	1
1	1	0	1	0	1	1	0	1	0	0	0	0	1
1	1	0	1	0	1	1	0	1	0	0	0	1	1
1	1	0	1	0	1	1	0	1	0	0	1	0	1

1	1	0	1	0	1	1	0	1	0	0	1	1	1
1	1	0	1	0	1	1	0	1	0	1	0	0	1
1	1	0	1	0	1	1	0	1	0	1	0	1	1
1	1	0	1	0	1	1	0	1	0	1	1	0	1
1	1	0	1	0	1	1	0	1	0	1	1	1	1
1	1	0	1	0	1	1	0	1	1	0	0	0	1
1	1	0	1	0	1	1	0	1	1	0	0	1	1
1	1	0	1	0	1	1	0	1	1	0	1	0	1
1	1	0	1	0	1	1	0	1	1	0	1	1	1
1	1	0	1	0	1	1	0	1	1	1	0	0	1
1	1	0	1	0	1	1	0	1	1	1	0	1	1
1	1	0	1	0	1	1	0	1	1	1	1	0	1
1	1	0	1	0	1	1	0	1	1	1	1	1	1
1	1	0	1	0	1	1	1	0	0	1	0	0	1
1	1	0	1	0	1	1	1	0	0	0	0	1	1
1	1	0	1	0	1	1	1	0	0	0	1	0	1
1	1	0	1	0	1	1	1	0	0	0	1	1	1
1	1	0	1	0	1	1	1	0	0	0	0	0	1
1	1	0	1	0	1	1	1	0	0	1	0	1	1
1	1	0	1	0	1	1	1	0	0	1	1	0	1
1	1	0	1	0	1	1	1	0	0	1	1	1	1
1	1	0	1	0	1	1	1	0	1	1	0	0	1
1	1	0	1	0	1	1	1	0	1	0	0	1	1
1	1	0	1	0	1	1	1	0	1	0	1	0	1
1	1	0	1	0	1	1	1	0	1	0	1	1	1
1	1	0	1	0	1	1	1	0	1	0	0	0	1
1	1	0	1	0	1	1	1	0	1	1	0	1	1
1	1	0	1	0	1	1	1	0	1	1	1	0	1
1	1	0	1	0	1	1	1	0	1	1	1	1	1
1	1	0	1	0	1	1	1	1	0	1	0	0	1
1	1	0	1	0	1	1	1	1	0	0	0	1	1
1	1	0	1	0	1	1	1	1	0	0	1	0	1
1	1	0	1	0	1	1	1	1	0	0	1	1	1
1	1	0	1	0	1	1	1	1	0	0	0	0	1
1	1	0	1	0	1	1	1	1	0	1	0	1	1
1	1	0	1	0	1	1	1	1	0	1	1	0	1
1	1	0	1	0	1	1	1	1	0	1	1	1	1
1	1	0	1	0	1	1	1	1	1	1	0	0	1
1	1	0	1	0	1	1	1	1	1	0	0	1	1
1	1	0	1	0	1	1	1	1	1	0	1	0	1
1	1	0	1	0	1	1	1	1	1	0	1	1	1
1	1	0	1	0	1	1	1	1	1	0	0	0	1
1	1	0	1	0	1	1	1	1	0	1	0	1	1
1	1	0	1	0	1	1	1	1	0	1	1	1	1
1	1	0	1	0	1	1	1	1	1	1	1	0	1
1	1	0	1	0	1	1	1	1	1	1	0	0	1
1	1	0	1	0	1	1	1	1	1	0	0	1	1
1	1	0	1	0	1	1	1	1	1	0	1	0	1
1	1	0	1	0	1	1	1	1	1	0	1	1	1
1	1	0	1	0	1	1	1	1	1	0	0	0	1
1	1	0	1	0	1	1	1	1	0	1	1	0	1
1	1	0	1	0	1	1	1	1	0	1	1	1	1
1	1	0	1	0	1	1	1	1	1	1	1	1	1
1	1	0	1	1	0	0	0	0	0	0	0	0	1

1	1	0	1	1	0	0	0	0	0	0	0	1	1
1	1	0	1	1	0	0	0	0	0	0	1	0	1
1	1	0	1	1	0	0	0	0	0	0	1	1	1
1	1	0	1	1	0	0	0	0	0	1	0	0	1
1	1	0	1	1	0	0	0	0	0	1	0	1	1
1	1	0	1	1	0	0	0	0	0	1	1	0	1
1	1	0	1	1	0	0	0	0	0	1	1	1	1
1	1	0	1	1	0	0	0	0	1	0	0	0	1
1	1	0	1	1	0	0	0	0	1	0	0	1	1
1	1	0	1	1	0	0	0	0	1	0	1	0	1
1	1	0	1	1	0	0	0	0	1	0	1	1	1
1	1	0	1	1	0	0	0	0	1	1	0	0	1
1	1	0	1	1	0	0	0	0	1	1	0	1	1
1	1	0	1	1	0	0	0	0	1	1	1	0	1
1	1	0	1	1	0	0	0	0	1	1	1	1	1
1	1	0	1	1	0	0	0	1	0	0	0	0	1
1	1	0	1	1	0	0	0	1	0	0	0	1	1
1	1	0	1	1	0	0	0	1	0	0	1	0	1
1	1	0	1	1	0	0	0	1	0	0	1	1	1
1	1	0	1	1	0	0	0	1	0	1	0	0	1
1	1	0	1	1	0	0	0	1	0	1	0	1	1
1	1	0	1	1	0	0	0	1	0	1	1	0	1
1	1	0	1	1	0	0	0	1	0	1	1	1	1
1	1	0	1	1	0	0	0	1	1	0	0	0	1
1	1	0	1	1	0	0	0	1	1	0	0	1	1
1	1	0	1	1	0	0	0	1	1	0	1	0	1
1	1	0	1	1	0	0	0	1	1	0	1	1	1
1	1	0	1	1	0	0	0	1	1	1	0	0	1
1	1	0	1	1	0	0	0	1	1	1	0	1	1
1	1	0	1	1	0	0	0	1	1	1	1	0	1
1	1	0	1	1	0	0	0	1	1	1	1	1	1
1	1	0	1	1	0	0	1	0	0	0	0	0	1
1	1	0	1	1	0	0	1	0	0	0	0	1	1
1	1	0	1	1	0	0	1	0	0	0	1	0	1
1	1	0	1	1	0	0	1	0	0	0	1	1	1
1	1	0	1	1	0	0	1	0	0	1	0	0	1
1	1	0	1	1	0	0	1	0	0	1	0	1	1
1	1	0	1	1	0	0	1	0	0	1	1	0	1
1	1	0	1	1	0	0	1	0	0	1	1	1	1
1	1	0	1	1	0	0	1	0	1	0	0	0	1
1	1	0	1	1	0	0	1	0	1	0	0	1	1
1	1	0	1	1	0	0	1	0	1	0	1	0	1
1	1	0	1	1	0	0	1	0	1	0	1	1	1
1	1	0	1	1	0	0	1	0	1	1	0	0	1
1	1	0	1	1	0	0	1	0	1	1	0	1	1
1	1	0	1	1	0	0	1	0	1	1	1	0	1

1	1	0	1	1	0	0	1	0	1	1	1	1	1
1	1	0	1	1	0	0	1	1	0	0	0	0	1
1	1	0	1	1	0	0	1	1	0	0	0	1	1
1	1	0	1	1	0	0	1	1	0	0	1	0	1
1	1	0	1	1	0	0	1	1	0	0	1	1	1
1	1	0	1	1	0	0	1	1	0	1	0	0	1
1	1	0	1	1	0	0	1	1	0	1	0	1	1
1	1	0	1	1	0	0	1	1	0	1	1	0	1
1	1	0	1	1	0	0	1	1	0	1	1	1	1
1	1	0	1	1	0	0	1	1	1	0	0	0	1
1	1	0	1	1	0	0	1	1	1	0	0	1	1
1	1	0	1	1	0	0	1	1	1	0	1	0	1
1	1	0	1	1	0	0	1	1	1	0	1	1	1
1	1	0	1	1	0	0	1	1	1	1	0	0	1
1	1	0	1	1	0	0	1	1	1	1	0	1	1
1	1	0	1	1	0	0	1	1	1	1	1	0	1
1	1	0	1	1	0	0	1	1	1	1	1	1	1
1	1	0	1	1	0	1	0	0	0	0	0	0	1
1	1	0	1	1	0	1	0	0	0	0	0	1	1
1	1	0	1	1	0	1	0	0	0	0	1	0	1
1	1	0	1	1	0	1	0	0	0	0	1	1	1
1	1	0	1	1	0	1	0	0	0	1	0	0	1
1	1	0	1	1	0	1	0	0	0	1	0	1	1
1	1	0	1	1	0	1	0	0	0	1	1	0	1
1	1	0	1	1	0	1	0	0	0	1	1	1	1
1	1	0	1	1	0	1	0	0	1	0	0	0	1
1	1	0	1	1	0	1	0	0	1	0	0	1	1
1	1	0	1	1	0	1	0	0	1	0	1	0	1
1	1	0	1	1	0	1	0	0	1	0	1	1	1
1	1	0	1	1	0	1	0	0	1	1	0	0	1
1	1	0	1	1	0	1	0	0	1	1	0	1	1
1	1	0	1	1	0	1	0	0	1	1	1	0	1
1	1	0	1	1	0	1	0	0	1	1	1	1	1
1	1	0	1	1	0	1	0	1	0	0	0	0	1
1	1	0	1	1	0	1	0	1	0	0	0	1	1
1	1	0	1	1	0	1	0	1	0	0	1	0	1
1	1	0	1	1	0	1	0	1	0	0	1	1	1
1	1	0	1	1	0	1	0	1	0	1	0	0	1
1	1	0	1	1	0	1	0	1	0	1	0	1	1
1	1	0	1	1	0	1	0	1	0	1	1	0	1
1	1	0	1	1	0	1	0	1	0	1	1	1	1
1	1	0	1	1	0	1	0	1	1	0	0	0	1
1	1	0	1	1	0	1	0	1	1	0	0	1	1
1	1	0	1	1	0	1	0	1	1	0	1	0	1
1	1	0	1	1	0	1	0	1	1	0	1	1	1
1	1	0	1	1	0	1	0	1	1	1	0	0	1

1	1	0	1	1	0	1	0	1	1	1	0	1	1
1	1	0	1	1	0	1	0	1	1	1	1	0	1
1	1	0	1	1	0	1	0	1	1	1	1	1	1
1	1	0	1	1	0	1	1	0	0	0	0	0	1
1	1	0	1	1	0	1	1	0	0	0	0	1	1
1	1	0	1	1	0	1	1	0	0	0	1	0	1
1	1	0	1	1	0	1	1	0	0	0	1	1	1
1	1	0	1	1	0	1	1	0	0	1	0	0	1
1	1	0	1	1	0	1	1	0	0	1	0	1	1
1	1	0	1	1	0	1	1	0	0	1	1	0	1
1	1	0	1	1	0	1	1	0	0	1	1	1	1
1	1	0	1	1	0	1	1	0	1	0	0	0	1
1	1	0	1	1	0	1	1	0	1	0	0	1	1
1	1	0	1	1	0	1	1	0	1	0	1	0	1
1	1	0	1	1	0	1	1	0	1	0	1	1	1
1	1	0	1	1	0	1	1	0	1	1	0	0	1
1	1	0	1	1	0	1	1	0	1	1	0	1	1
1	1	0	1	1	0	1	1	0	1	1	1	0	1
1	1	0	1	1	0	1	1	0	1	1	1	1	1
1	1	0	1	1	0	1	1	1	0	0	0	0	1
1	1	0	1	1	0	1	1	1	0	0	0	1	1
1	1	0	1	1	0	1	1	1	0	0	1	0	1
1	1	0	1	1	0	1	1	1	0	0	1	1	1
1	1	0	1	1	0	1	1	1	0	1	0	0	1
1	1	0	1	1	0	1	1	1	0	1	0	1	1
1	1	0	1	1	0	1	1	1	0	1	1	0	1
1	1	0	1	1	0	1	1	1	0	1	1	1	1
1	1	0	1	1	0	1	1	1	1	0	0	0	1
1	1	0	1	1	0	1	1	1	1	0	0	1	1
1	1	0	1	1	0	1	1	1	1	0	1	0	1
1	1	0	1	1	0	1	1	1	1	0	1	1	1
1	1	0	1	1	0	1	1	1	1	1	0	0	1
1	1	0	1	1	0	1	1	1	1	1	0	1	1
1	1	0	1	1	0	1	1	1	1	1	1	0	1
1	1	0	1	1	0	1	1	1	1	1	1	1	1
1	1	0	1	1	1	0	0	0	0	0	0	0	1
1	1	0	1	1	1	0	0	0	0	0	0	1	1
1	1	0	1	1	1	0	0	0	0	0	1	0	1
1	1	0	1	1	1	0	0	0	0	0	1	1	1
1	1	0	1	1	1	0	0	0	0	1	0	0	1
1	1	0	1	1	1	0	0	0	0	1	0	1	1
1	1	0	1	1	1	0	0	0	0	1	1	0	1
1	1	0	1	1	1	0	0	0	0	1	1	1	1
1	1	0	1	1	1	0	0	0	1	0	0	0	1
1	1	0	1	1	1	0	0	0	1	0	0	1	1
1	1	0	1	1	1	0	0	0	1	0	1	0	1

1	1	0	1	1	1	0	0	0	1	0	1	1	1
1	1	0	1	1	1	0	0	0	1	1	0	0	1
1	1	0	1	1	1	0	0	0	1	1	0	1	1
1	1	0	1	1	1	0	0	0	1	1	1	0	1
1	1	0	1	1	1	0	0	0	1	1	1	1	1
1	1	0	1	1	1	0	0	1	0	0	0	0	1
1	1	0	1	1	1	0	0	1	0	0	0	1	1
1	1	0	1	1	1	0	0	1	0	0	1	0	1
1	1	0	1	1	1	0	0	1	0	0	1	1	1
1	1	0	1	1	1	0	0	1	0	1	0	0	1
1	1	0	1	1	1	0	0	1	0	1	0	1	1
1	1	0	1	1	1	0	0	1	0	1	1	0	1
1	1	0	1	1	1	0	0	1	0	1	1	1	1
1	1	0	1	1	1	0	0	1	1	0	0	0	1
1	1	0	1	1	1	0	0	1	1	0	0	1	1
1	1	0	1	1	1	0	0	1	1	0	1	0	1
1	1	0	1	1	1	0	0	1	1	0	1	1	1
1	1	0	1	1	1	0	0	1	1	1	0	0	1
1	1	0	1	1	1	0	0	1	1	1	0	1	1
1	1	0	1	1	1	0	0	1	1	1	1	0	1
1	1	0	1	1	1	0	0	1	1	1	1	1	1
1	1	0	1	1	1	0	1	0	0	0	0	0	1
1	1	0	1	1	1	0	1	0	0	0	0	1	1
1	1	0	1	1	1	0	1	0	0	0	1	0	1
1	1	0	1	1	1	0	1	0	0	0	1	1	1
1	1	0	1	1	1	0	1	0	0	1	0	0	1
1	1	0	1	1	1	0	1	0	0	1	0	1	1
1	1	0	1	1	1	0	1	0	0	1	1	0	1
1	1	0	1	1	1	0	1	0	0	1	1	1	1
1	1	0	1	1	1	0	1	0	1	0	0	0	1
1	1	0	1	1	1	0	1	0	1	0	0	1	1
1	1	0	1	1	1	0	1	0	1	0	1	0	1
1	1	0	1	1	1	0	1	0	1	0	1	1	1
1	1	0	1	1	1	0	1	0	1	1	0	0	1
1	1	0	1	1	1	0	1	0	1	1	0	1	1
1	1	0	1	1	1	0	1	0	1	1	1	0	1
1	1	0	1	1	1	0	1	0	1	1	1	1	1
1	1	0	1	1	1	0	1	1	0	0	0	0	1
1	1	0	1	1	1	0	1	1	0	0	0	1	1
1	1	0	1	1	1	0	1	1	0	0	1	0	1
1	1	0	1	1	1	0	1	1	0	0	1	1	1
1	1	0	1	1	1	0	1	1	0	1	0	0	1
1	1	0	1	1	1	0	1	1	0	1	0	1	1
1	1	0	1	1	1	0	1	1	0	1	1	0	1
1	1	0	1	1	1	0	1	1	0	1	1	1	1
1	1	0	1	1	1	0	1	1	1	0	0	0	1

1	1	0	1	1	1	0	1	1	1	0	0	1	1
1	1	0	1	1	1	0	1	1	1	0	1	0	1
1	1	0	1	1	1	0	1	1	1	0	1	1	1
1	1	0	1	1	1	0	1	1	1	1	0	0	1
1	1	0	1	1	1	0	1	1	1	1	0	1	1
1	1	0	1	1	1	0	1	1	1	1	1	0	1
1	1	0	1	1	1	0	1	1	1	1	1	1	1
1	1	0	1	1	1	1	0	0	0	0	0	0	1
1	1	0	1	1	1	1	0	0	0	0	0	1	1
1	1	0	1	1	1	1	0	0	0	0	1	0	1
1	1	0	1	1	1	1	0	0	0	0	1	1	1
1	1	0	1	1	1	1	0	0	0	1	0	0	1
1	1	0	1	1	1	1	0	0	0	1	0	1	1
1	1	0	1	1	1	1	0	0	0	1	1	0	1
1	1	0	1	1	1	1	0	0	0	1	1	1	1
1	1	0	1	1	1	1	0	0	1	0	0	0	1
1	1	0	1	1	1	1	0	0	1	0	0	1	1
1	1	0	1	1	1	1	0	0	1	0	1	0	1
1	1	0	1	1	1	1	0	0	1	0	1	1	1
1	1	0	1	1	1	1	0	0	1	1	0	0	1
1	1	0	1	1	1	1	0	0	1	1	0	1	1
1	1	0	1	1	1	1	0	0	1	1	1	0	1
1	1	0	1	1	1	1	0	0	1	1	1	1	1
1	1	0	1	1	1	1	0	1	0	0	0	0	1
1	1	0	1	1	1	1	0	1	0	0	0	1	1
1	1	0	1	1	1	1	0	1	0	0	1	0	1
1	1	0	1	1	1	1	0	1	0	0	1	1	1
1	1	0	1	1	1	1	0	1	0	1	0	0	1
1	1	0	1	1	1	1	0	1	0	1	0	1	1
1	1	0	1	1	1	1	0	1	0	1	1	0	1
1	1	0	1	1	1	1	0	1	0	1	1	1	1
1	1	0	1	1	1	1	0	1	1	0	0	0	1
1	1	0	1	1	1	1	0	1	1	0	0	1	1
1	1	0	1	1	1	1	0	1	1	0	1	0	1
1	1	0	1	1	1	1	0	1	1	0	1	1	1
1	1	0	1	1	1	1	0	1	1	1	0	0	1
1	1	0	1	1	1	1	0	1	1	1	0	1	1
1	1	0	1	1	1	1	0	1	1	1	1	0	1
1	1	0	1	1	1	1	0	1	1	1	1	1	1
1	1	0	1	1	1	1	1	0	0	1	0	0	1
1	1	0	1	1	1	1	1	0	0	0	0	1	1
1	1	0	1	1	1	1	1	0	0	0	1	0	1
1	1	0	1	1	1	1	1	0	0	0	1	1	1
1	1	0	1	1	1	1	1	0	0	0	0	0	1
1	1	0	1	1	1	1	1	0	0	1	0	1	1
1	1	0	1	1	1	1	1	0	0	1	1	0	1

1	1	0	1	1	1	1	1	0	0	1	1	1	1
1	1	0	1	1	1	1	1	0	1	1	0	0	1
1	1	0	1	1	1	1	1	0	1	0	0	1	1
1	1	0	1	1	1	1	1	0	1	0	1	0	1
1	1	0	1	1	1	1	1	0	1	0	1	1	1
1	1	0	1	1	1	1	1	0	1	0	0	0	1
1	1	0	1	1	1	1	1	0	1	1	0	1	1
1	1	0	1	1	1	1	1	0	1	1	1	0	1
1	1	0	1	1	1	1	1	0	1	1	1	1	1
1	1	0	1	1	1	1	1	1	0	1	0	0	1
1	1	0	1	1	1	1	1	1	0	0	0	1	1
1	1	0	1	1	1	1	1	1	0	0	1	0	1
1	1	0	1	1	1	1	1	1	0	0	1	1	1
1	1	0	1	1	1	1	1	1	0	0	0	0	1
1	1	0	1	1	1	1	1	1	0	1	0	1	1
1	1	0	1	1	1	1	1	1	0	1	1	0	1
1	1	0	1	1	1	1	1	1	0	1	1	1	1
1	1	0	1	1	1	1	1	1	1	1	0	0	1
1	1	0	1	1	1	1	1	1	1	0	0	1	1
1	1	0	1	1	1	1	1	1	1	0	1	0	1
1	1	0	1	1	1	1	1	1	1	0	1	1	1
1	1	0	1	1	1	1	1	1	1	0	0	0	1
1	1	0	1	1	1	1	1	1	1	1	0	1	1
1	1	0	1	1	1	1	1	1	1	1	1	0	1
1	1	0	1	1	1	1	1	1	1	1	1	1	1
1	1	1	0	0	0	0	0	0	0	0	0	0	1
1	1	1	0	0	0	0	0	0	0	0	0	1	1
1	1	1	0	0	0	0	0	0	0	0	1	0	1
1	1	1	0	0	0	0	0	0	0	0	1	1	1
1	1	1	0	0	0	0	0	0	0	1	0	0	1
1	1	1	0	0	0	0	0	0	0	1	0	1	1
1	1	1	0	0	0	0	0	0	0	1	1	0	1
1	1	1	0	0	0	0	0	0	0	1	1	1	1
1	1	1	0	0	0	0	0	0	1	0	0	0	1
1	1	1	0	0	0	0	0	0	1	0	0	1	1
1	1	1	0	0	0	0	0	0	1	0	1	0	1
1	1	1	0	0	0	0	0	0	1	0	1	1	1
1	1	1	0	0	0	0	0	0	1	1	0	0	1
1	1	1	0	0	0	0	0	0	1	1	0	1	1
1	1	1	0	0	0	0	0	0	1	1	1	0	1
1	1	1	0	0	0	0	0	0	1	1	1	1	1
1	1	1	0	0	0	0	0	1	0	0	0	0	1
1	1	1	0	0	0	0	0	1	0	0	0	1	1
1	1	1	0	0	0	0	0	1	0	0	1	0	1
1	1	1	0	0	0	0	0	1	0	0	1	1	1
1	1	1	0	0	0	0	0	1	0	1	0	0	1

1	1	1	0	0	0	0	0	1	0	1	0	1	1
1	1	1	0	0	0	0	0	1	0	1	1	0	1
1	1	1	0	0	0	0	0	1	0	1	1	1	1
1	1	1	0	0	0	0	0	1	1	0	0	0	1
1	1	1	0	0	0	0	0	1	1	0	0	1	1
1	1	1	0	0	0	0	0	1	1	0	1	0	1
1	1	1	0	0	0	0	0	1	1	0	1	1	1
1	1	1	0	0	0	0	0	1	1	1	0	0	1
1	1	1	0	0	0	0	0	1	1	1	0	1	1
1	1	1	0	0	0	0	0	1	1	1	1	0	1
1	1	1	0	0	0	0	0	1	1	1	1	1	1
1	1	1	0	0	0	0	1	0	0	0	0	0	1
1	1	1	0	0	0	0	1	0	0	0	0	1	1
1	1	1	0	0	0	0	1	0	0	0	1	0	1
1	1	1	0	0	0	0	1	0	0	0	1	1	1
1	1	1	0	0	0	0	1	0	0	1	0	0	1
1	1	1	0	0	0	0	1	0	0	1	0	1	1
1	1	1	0	0	0	0	1	0	0	1	1	0	1
1	1	1	0	0	0	0	1	0	0	1	1	1	1
1	1	1	0	0	0	0	1	0	1	0	0	0	1
1	1	1	0	0	0	0	1	0	1	0	0	1	1
1	1	1	0	0	0	0	1	0	1	0	1	0	1
1	1	1	0	0	0	0	1	0	1	0	1	1	1
1	1	1	0	0	0	0	1	0	1	1	0	0	1
1	1	1	0	0	0	0	1	0	1	1	0	1	1
1	1	1	0	0	0	0	1	0	1	1	1	0	1
1	1	1	0	0	0	0	1	0	1	1	1	1	1
1	1	1	0	0	0	0	1	1	0	0	0	0	1
1	1	1	0	0	0	0	1	1	0	0	0	1	1
1	1	1	0	0	0	0	1	1	0	0	1	0	1
1	1	1	0	0	0	0	1	1	0	0	1	1	1
1	1	1	0	0	0	0	1	1	0	1	0	0	1
1	1	1	0	0	0	0	1	1	0	1	0	1	1
1	1	1	0	0	0	0	1	1	0	1	1	0	1
1	1	1	0	0	0	0	1	1	0	1	1	1	1
1	1	1	0	0	0	0	1	1	1	0	0	0	1
1	1	1	0	0	0	0	1	1	1	0	0	1	1
1	1	1	0	0	0	0	1	1	1	0	1	0	1
1	1	1	0	0	0	0	1	1	1	0	1	1	1
1	1	1	0	0	0	0	1	1	1	1	0	0	1
1	1	1	0	0	0	0	1	1	1	1	0	1	1
1	1	1	0	0	0	0	1	1	1	1	1	0	1
1	1	1	0	0	0	0	1	1	1	1	1	1	1
1	1	1	0	0	0	1	0	0	0	0	0	0	1
1	1	1	0	0	0	1	0	0	0	0	0	1	1
1	1	1	0	0	0	1	0	0	0	0	1	0	1

1	1	1	0	0	0	1	0	0	0	0	1	1	1
1	1	1	0	0	0	1	0	0	0	1	0	0	1
1	1	1	0	0	0	1	0	0	0	1	0	1	1
1	1	1	0	0	0	1	0	0	0	1	1	0	1
1	1	1	0	0	0	1	0	0	0	1	1	1	1
1	1	1	0	0	0	1	0	0	1	0	0	0	1
1	1	1	0	0	0	1	0	0	1	0	0	1	1
1	1	1	0	0	0	1	0	0	1	0	1	0	1
1	1	1	0	0	0	1	0	0	1	0	1	1	1
1	1	1	0	0	0	1	0	0	1	1	0	0	1
1	1	1	0	0	0	1	0	0	1	1	0	1	1
1	1	1	0	0	0	1	0	0	1	1	1	0	1
1	1	1	0	0	0	1	0	0	1	1	1	1	1
1	1	1	0	0	0	1	0	1	0	0	0	0	1
1	1	1	0	0	0	1	0	1	0	0	0	1	1
1	1	1	0	0	0	1	0	1	0	0	1	0	1
1	1	1	0	0	0	1	0	1	0	0	1	1	1
1	1	1	0	0	0	1	0	1	0	1	0	0	1
1	1	1	0	0	0	1	0	1	0	1	0	1	1
1	1	1	0	0	0	1	0	1	0	1	1	0	1
1	1	1	0	0	0	1	0	1	0	1	1	1	1
1	1	1	0	0	0	1	0	1	1	0	0	0	1
1	1	1	0	0	0	1	0	1	1	0	0	1	1
1	1	1	0	0	0	1	0	1	1	0	1	0	1
1	1	1	0	0	0	1	0	1	1	0	1	1	1
1	1	1	0	0	0	1	0	1	1	1	0	0	1
1	1	1	0	0	0	1	0	1	1	1	0	1	1
1	1	1	0	0	0	1	0	1	1	1	1	0	1
1	1	1	0	0	0	1	0	1	1	1	1	1	1
1	1	1	0	0	0	1	1	0	0	0	0	0	1
1	1	1	0	0	0	1	1	0	0	0	0	1	1
1	1	1	0	0	0	1	1	0	0	0	1	0	1
1	1	1	0	0	0	1	1	0	0	0	1	1	1
1	1	1	0	0	0	1	1	0	0	1	0	0	1
1	1	1	0	0	0	1	1	0	0	1	0	1	1
1	1	1	0	0	0	1	1	0	0	1	1	0	1
1	1	1	0	0	0	1	1	0	0	1	1	1	1
1	1	1	0	0	0	1	1	0	1	0	0	0	1
1	1	1	0	0	0	1	1	0	1	0	0	1	1
1	1	1	0	0	0	1	1	0	1	0	1	0	1
1	1	1	0	0	0	1	1	0	1	0	1	1	1
1	1	1	0	0	0	1	1	0	1	1	0	0	1
1	1	1	0	0	0	1	1	0	1	1	0	1	1
1	1	1	0	0	0	1	1	0	1	1	1	0	1
1	1	1	0	0	0	1	1	0	1	1	1	1	1
1	1	1	0	0	0	1	1	1	0	0	0	0	1

1	1	1	0	0	0	1	1	1	0	0	0	1	1
1	1	1	0	0	0	1	1	1	0	0	1	0	1
1	1	1	0	0	0	1	1	1	0	0	1	1	1
1	1	1	0	0	0	1	1	1	0	1	0	0	1
1	1	1	0	0	0	1	1	1	0	1	0	1	1
1	1	1	0	0	0	1	1	1	0	1	1	0	1
1	1	1	0	0	0	1	1	1	0	1	1	1	1
1	1	1	0	0	0	1	1	1	1	0	0	0	1
1	1	1	0	0	0	1	1	1	1	0	0	1	1
1	1	1	0	0	0	1	1	1	1	0	1	0	1
1	1	1	0	0	0	1	1	1	1	0	1	1	1
1	1	1	0	0	0	1	1	1	1	1	0	0	1
1	1	1	0	0	0	1	1	1	1	1	0	1	1
1	1	1	0	0	0	1	1	1	1	1	1	0	1
1	1	1	0	0	0	1	1	1	1	1	1	1	1
1	1	1	0	0	1	0	0	0	0	0	0	0	1
1	1	1	0	0	1	0	0	0	0	0	0	1	1
1	1	1	0	0	1	0	0	0	0	0	1	0	1
1	1	1	0	0	1	0	0	0	0	0	1	1	1
1	1	1	0	0	1	0	0	0	0	1	0	0	1
1	1	1	0	0	1	0	0	0	0	1	0	1	1
1	1	1	0	0	1	0	0	0	0	1	1	0	1
1	1	1	0	0	1	0	0	0	0	1	1	1	1
1	1	1	0	0	1	0	0	0	1	0	0	0	1
1	1	1	0	0	1	0	0	0	1	0	0	1	1
1	1	1	0	0	1	0	0	0	1	0	1	0	1
1	1	1	0	0	1	0	0	0	1	0	1	1	1
1	1	1	0	0	1	0	0	0	1	1	0	0	1
1	1	1	0	0	1	0	0	0	1	1	0	1	1
1	1	1	0	0	1	0	0	0	1	1	1	0	1
1	1	1	0	0	1	0	0	0	1	1	1	1	1
1	1	1	0	0	1	0	0	1	0	0	0	0	1
1	1	1	0	0	1	0	0	1	0	0	0	1	1
1	1	1	0	0	1	0	0	1	0	0	1	0	1
1	1	1	0	0	1	0	0	1	0	0	1	1	1
1	1	1	0	0	1	0	0	1	0	1	0	0	1
1	1	1	0	0	1	0	0	1	0	1	0	1	1
1	1	1	0	0	1	0	0	1	0	1	1	0	1
1	1	1	0	0	1	0	0	1	0	1	1	1	1
1	1	1	0	0	1	0	0	1	1	0	0	0	1
1	1	1	0	0	1	0	0	1	1	0	0	1	1
1	1	1	0	0	1	0	0	1	1	0	1	0	1
1	1	1	0	0	1	0	0	1	1	0	1	1	1
1	1	1	0	0	1	0	0	1	1	1	0	0	1
1	1	1	0	0	1	0	0	1	1	1	0	1	1
1	1	1	0	0	1	0	0	1	1	1	1	0	1

1	1	1	0	0	1	0	0	1	1	1	1	1	1
1	1	1	0	0	1	0	1	0	0	0	0	0	1
1	1	1	0	0	1	0	1	0	0	0	0	1	1
1	1	1	0	0	1	0	1	0	0	0	1	0	1
1	1	1	0	0	1	0	1	0	0	0	1	1	1
1	1	1	0	0	1	0	1	0	0	1	0	0	1
1	1	1	0	0	1	0	1	0	0	1	0	1	1
1	1	1	0	0	1	0	1	0	0	1	1	0	1
1	1	1	0	0	1	0	1	0	0	1	1	1	1
1	1	1	0	0	1	0	1	0	1	0	0	0	1
1	1	1	0	0	1	0	1	0	1	0	0	1	1
1	1	1	0	0	1	0	1	0	1	0	1	0	1
1	1	1	0	0	1	0	1	0	1	0	1	1	1
1	1	1	0	0	1	0	1	0	1	1	0	0	1
1	1	1	0	0	1	0	1	0	1	1	0	1	1
1	1	1	0	0	1	0	1	0	1	1	1	0	1
1	1	1	0	0	1	0	1	0	1	1	1	1	1
1	1	1	0	0	1	0	1	1	0	0	0	0	1
1	1	1	0	0	1	0	1	1	0	0	0	1	1
1	1	1	0	0	1	0	1	1	0	0	1	0	1
1	1	1	0	0	1	0	1	1	0	0	1	1	1
1	1	1	0	0	1	0	1	1	0	1	0	0	1
1	1	1	0	0	1	0	1	1	0	1	0	1	1
1	1	1	0	0	1	0	1	1	0	1	1	0	1
1	1	1	0	0	1	0	1	1	0	1	1	1	1
1	1	1	0	0	1	0	1	1	1	0	0	0	1
1	1	1	0	0	1	0	1	1	1	0	0	1	1
1	1	1	0	0	1	0	1	1	1	0	1	0	1
1	1	1	0	0	1	0	1	1	1	0	1	1	1
1	1	1	0	0	1	0	1	1	1	1	0	0	1
1	1	1	0	0	1	0	1	1	1	1	0	1	1
1	1	1	0	0	1	0	1	1	1	1	1	0	1
1	1	1	0	0	1	0	1	1	1	1	1	1	1
1	1	1	0	0	1	1	0	0	0	0	0	0	1
1	1	1	0	0	1	1	0	0	0	0	0	1	1
1	1	1	0	0	1	1	0	0	0	0	1	0	1
1	1	1	0	0	1	1	0	0	0	0	1	1	1
1	1	1	0	0	1	1	0	0	0	1	0	0	1
1	1	1	0	0	1	1	0	0	0	1	0	1	1
1	1	1	0	0	1	1	0	0	0	1	1	0	1
1	1	1	0	0	1	1	0	0	0	1	1	1	1
1	1	1	0	0	1	1	0	0	1	0	0	0	1
1	1	1	0	0	1	1	0	0	1	0	0	1	1
1	1	1	0	0	1	1	0	0	1	0	1	0	1
1	1	1	0	0	1	1	0	0	1	0	1	1	1
1	1	1	0	0	1	1	0	0	1	1	0	0	1

1	1	1	0	0	1	1	0	0	1	1	0	1	1
1	1	1	0	0	1	1	0	0	1	1	1	0	1
1	1	1	0	0	1	1	0	0	1	1	1	1	1
1	1	1	0	0	1	1	0	1	0	0	0	0	1
1	1	1	0	0	1	1	0	1	0	0	0	1	1
1	1	1	0	0	1	1	0	1	0	0	1	0	1
1	1	1	0	0	1	1	0	1	0	0	1	1	1
1	1	1	0	0	1	1	0	1	0	1	0	0	1
1	1	1	0	0	1	1	0	1	0	1	0	1	1
1	1	1	0	0	1	1	0	1	0	1	1	0	1
1	1	1	0	0	1	1	0	1	0	1	1	1	1
1	1	1	0	0	1	1	0	1	1	0	0	0	1
1	1	1	0	0	1	1	0	1	1	0	0	1	1
1	1	1	0	0	1	1	0	1	1	0	1	0	1
1	1	1	0	0	1	1	0	1	1	0	1	1	1
1	1	1	0	0	1	1	0	1	1	1	0	0	1
1	1	1	0	0	1	1	0	1	1	1	0	1	1
1	1	1	0	0	1	1	0	1	1	1	1	0	1
1	1	1	0	0	1	1	0	1	1	1	1	1	1
1	1	1	0	0	1	1	1	0	0	1	0	0	1
1	1	1	0	0	1	1	1	0	0	0	0	1	1
1	1	1	0	0	1	1	1	0	0	0	1	0	1
1	1	1	0	0	1	1	1	0	0	0	1	1	1
1	1	1	0	0	1	1	1	0	0	0	0	0	1
1	1	1	0	0	1	1	1	0	0	1	0	1	1
1	1	1	0	0	1	1	1	0	0	1	1	0	1
1	1	1	0	0	1	1	1	0	0	1	1	1	1
1	1	1	0	0	1	1	1	0	1	1	0	0	1
1	1	1	0	0	1	1	1	0	1	0	0	1	1
1	1	1	0	0	1	1	1	0	1	0	1	0	1
1	1	1	0	0	1	1	1	0	1	0	1	1	1
1	1	1	0	0	1	1	1	0	1	0	0	0	1
1	1	1	0	0	1	1	1	0	1	1	0	1	1
1	1	1	0	0	1	1	1	0	1	1	1	0	1
1	1	1	0	0	1	1	1	0	1	1	1	1	1
1	1	1	0	0	1	1	1	1	0	1	0	0	1
1	1	1	0	0	1	1	1	1	0	0	0	1	1
1	1	1	0	0	1	1	1	1	0	0	1	0	1
1	1	1	0	0	1	1	1	1	0	0	1	1	1
1	1	1	0	0	1	1	1	1	0	0	0	0	1
1	1	1	0	0	1	1	1	1	0	1	0	1	1
1	1	1	0	0	1	1	1	1	0	1	1	0	1
1	1	1	0	0	1	1	1	1	0	1	1	1	1
1	1	1	0	0	1	1	1	1	1	1	0	0	1
1	1	1	0	0	1	1	1	1	1	0	0	1	1
1	1	1	0	0	1	1	1	1	1	0	1	0	1

1	1	1	0	0	1	1	1	1	1	0	1	1	1
1	1	1	0	0	1	1	1	1	1	0	0	0	1
1	1	1	0	0	1	1	1	1	1	1	0	1	1
1	1	1	0	0	1	1	1	1	1	1	1	0	1
1	1	1	0	0	1	1	1	1	1	1	1	1	1
1	1	1	0	1	0	0	0	0	0	0	0	0	1
1	1	1	0	1	0	0	0	0	0	0	0	1	1
1	1	1	0	1	0	0	0	0	0	0	1	0	1
1	1	1	0	1	0	0	0	0	0	0	1	1	1
1	1	1	0	1	0	0	0	0	0	1	0	0	1
1	1	1	0	1	0	0	0	0	0	1	0	1	1
1	1	1	0	1	0	0	0	0	0	1	1	0	1
1	1	1	0	1	0	0	0	0	0	1	1	1	1
1	1	1	0	1	0	0	0	0	1	0	0	0	1
1	1	1	0	1	0	0	0	0	1	0	0	1	1
1	1	1	0	1	0	0	0	0	1	0	1	0	1
1	1	1	0	1	0	0	0	0	1	0	1	1	1
1	1	1	0	1	0	0	0	0	1	1	0	0	1
1	1	1	0	1	0	0	0	0	1	1	0	1	1
1	1	1	0	1	0	0	0	0	1	1	1	0	1
1	1	1	0	1	0	0	0	0	1	1	1	1	1
1	1	1	0	1	0	0	0	1	0	0	0	0	1
1	1	1	0	1	0	0	0	1	0	0	0	1	1
1	1	1	0	1	0	0	0	1	0	0	1	0	1
1	1	1	0	1	0	0	0	1	0	0	1	1	1
1	1	1	0	1	0	0	0	1	0	1	0	0	1
1	1	1	0	1	0	0	0	1	0	1	0	1	1
1	1	1	0	1	0	0	0	1	0	1	1	0	1
1	1	1	0	1	0	0	0	1	0	1	1	1	1
1	1	1	0	1	0	0	0	1	1	0	0	0	1
1	1	1	0	1	0	0	0	1	1	0	0	1	1
1	1	1	0	1	0	0	0	1	1	0	1	0	1
1	1	1	0	1	0	0	0	1	1	0	1	1	1
1	1	1	0	1	0	0	0	1	1	1	0	0	1
1	1	1	0	1	0	0	0	1	1	1	0	1	1
1	1	1	0	1	0	0	0	1	1	1	1	0	1
1	1	1	0	1	0	0	0	1	1	1	1	1	1
1	1	1	0	1	0	0	1	0	0	0	0	0	1
1	1	1	0	1	0	0	1	0	0	0	0	1	1
1	1	1	0	1	0	0	1	0	0	0	1	0	1
1	1	1	0	1	0	0	1	0	0	0	1	1	1
1	1	1	0	1	0	0	1	0	0	1	0	0	1
1	1	1	0	1	0	0	1	0	0	1	0	1	1
1	1	1	0	1	0	0	1	0	0	1	1	0	1
1	1	1	0	1	0	0	1	0	0	1	1	1	1
1	1	1	0	1	0	0	1	0	1	0	0	0	1

1	1	1	0	1	0	0	1	0	1	0	0	1	1
1	1	1	0	1	0	0	1	0	1	0	1	0	1
1	1	1	0	1	0	0	1	0	1	0	1	1	1
1	1	1	0	1	0	0	1	0	1	1	0	0	1
1	1	1	0	1	0	0	1	0	1	1	0	1	1
1	1	1	0	1	0	0	1	0	1	1	1	0	1
1	1	1	0	1	0	0	1	0	1	1	1	1	1
1	1	1	0	1	0	0	1	1	0	0	0	0	1
1	1	1	0	1	0	0	1	1	0	0	0	1	1
1	1	1	0	1	0	0	1	1	0	0	1	0	1
1	1	1	0	1	0	0	1	1	0	0	1	1	1
1	1	1	0	1	0	0	1	1	0	1	0	0	1
1	1	1	0	1	0	0	1	1	0	1	0	1	1
1	1	1	0	1	0	0	1	1	0	1	1	0	1
1	1	1	0	1	0	0	1	1	0	1	1	1	1
1	1	1	0	1	0	0	1	1	1	0	0	0	1
1	1	1	0	1	0	0	1	1	1	0	0	1	1
1	1	1	0	1	0	0	1	1	1	0	1	0	1
1	1	1	0	1	0	0	1	1	1	0	1	1	1
1	1	1	0	1	0	0	1	1	1	1	0	0	1
1	1	1	0	1	0	0	1	1	1	1	0	1	1
1	1	1	0	1	0	0	1	1	1	1	1	0	1
1	1	1	0	1	0	0	1	1	1	1	1	1	1
1	1	1	0	1	0	1	0	0	0	0	0	0	1
1	1	1	0	1	0	1	0	0	0	0	0	1	1
1	1	1	0	1	0	1	0	0	0	0	1	0	1
1	1	1	0	1	0	1	0	0	0	0	1	1	1
1	1	1	0	1	0	1	0	0	0	1	0	0	1
1	1	1	0	1	0	1	0	0	0	1	0	1	1
1	1	1	0	1	0	1	0	0	0	1	1	0	1
1	1	1	0	1	0	1	0	0	0	1	1	1	1
1	1	1	0	1	0	1	0	0	1	0	0	0	1
1	1	1	0	1	0	1	0	0	1	0	0	1	1
1	1	1	0	1	0	1	0	0	1	0	1	0	1
1	1	1	0	1	0	1	0	0	1	0	1	1	1
1	1	1	0	1	0	1	0	0	1	1	0	0	1
1	1	1	0	1	0	1	0	0	1	1	0	1	1
1	1	1	0	1	0	1	0	0	1	1	1	0	1
1	1	1	0	1	0	1	0	0	1	1	1	1	1
1	1	1	0	1	0	1	0	1	0	0	0	0	1
1	1	1	0	1	0	1	0	1	0	0	0	1	1
1	1	1	0	1	0	1	0	1	0	0	1	0	1
1	1	1	0	1	0	1	0	1	0	0	1	1	1
1	1	1	0	1	0	1	0	1	0	1	0	0	1
1	1	1	0	1	0	1	0	1	0	1	0	1	1
1	1	1	0	1	0	1	0	1	0	1	1	0	1

1	1	1	0	1	0	1	0	1	0	1	1	1	1
1	1	1	0	1	0	1	0	1	1	0	0	0	1
1	1	1	0	1	0	1	0	1	1	0	0	1	1
1	1	1	0	1	0	1	0	1	1	0	1	0	1
1	1	1	0	1	0	1	0	1	1	0	1	1	1
1	1	1	0	1	0	1	0	1	1	1	0	0	1
1	1	1	0	1	0	1	0	1	1	1	0	1	1
1	1	1	0	1	0	1	0	1	1	1	1	0	1
1	1	1	0	1	0	1	0	1	1	1	1	1	1
1	1	1	0	1	0	1	1	0	0	0	0	0	1
1	1	1	0	1	0	1	1	0	0	0	0	1	1
1	1	1	0	1	0	1	1	0	0	0	1	0	1
1	1	1	0	1	0	1	1	0	0	0	1	1	1
1	1	1	0	1	0	1	1	0	0	1	0	0	1
1	1	1	0	1	0	1	1	0	0	1	0	1	1
1	1	1	0	1	0	1	1	0	0	1	1	0	1
1	1	1	0	1	0	1	1	0	0	1	1	1	1
1	1	1	0	1	0	1	1	0	1	0	0	0	1
1	1	1	0	1	0	1	1	0	1	0	0	1	1
1	1	1	0	1	0	1	1	0	1	0	1	0	1
1	1	1	0	1	0	1	1	0	1	0	1	1	1
1	1	1	0	1	0	1	1	0	1	1	0	0	1
1	1	1	0	1	0	1	1	0	1	1	0	1	1
1	1	1	0	1	0	1	1	0	1	1	1	0	1
1	1	1	0	1	0	1	1	0	1	1	1	1	1
1	1	1	0	1	0	1	1	1	0	0	0	0	1
1	1	1	0	1	0	1	1	1	0	0	0	1	1
1	1	1	0	1	0	1	1	1	0	0	1	0	1
1	1	1	0	1	0	1	1	1	0	0	1	1	1
1	1	1	0	1	0	1	1	1	0	1	0	0	1
1	1	1	0	1	0	1	1	1	0	1	0	1	1
1	1	1	0	1	0	1	1	1	0	1	1	0	1
1	1	1	0	1	0	1	1	1	0	1	1	1	1
1	1	1	0	1	0	1	1	1	1	0	0	0	1
1	1	1	0	1	0	1	1	1	1	0	0	1	1
1	1	1	0	1	0	1	1	1	1	0	1	0	1
1	1	1	0	1	0	1	1	1	1	0	1	1	1
1	1	1	0	1	0	1	1	1	1	1	0	0	1
1	1	1	0	1	0	1	1	1	1	1	0	1	1
1	1	1	0	1	0	1	1	1	1	1	1	0	1
1	1	1	0	1	0	1	1	1	1	1	1	1	1
1	1	1	0	1	1	0	0	0	0	0	0	0	1
1	1	1	0	1	1	0	0	0	0	0	0	1	1
1	1	1	0	1	1	0	0	0	0	0	1	0	1
1	1	1	0	1	1	0	0	0	0	0	1	1	1
1	1	1	0	1	1	0	0	0	0	1	0	0	1

1	1	1	0	1	1	0	0	0	0	1	0	1	1
1	1	1	0	1	1	0	0	0	0	1	1	0	1
1	1	1	0	1	1	0	0	0	0	1	1	1	1
1	1	1	0	1	1	0	0	0	1	0	0	0	1
1	1	1	0	1	1	0	0	0	1	0	0	1	1
1	1	1	0	1	1	0	0	0	1	0	1	0	1
1	1	1	0	1	1	0	0	0	1	0	1	1	1
1	1	1	0	1	1	0	0	0	1	1	0	0	1
1	1	1	0	1	1	0	0	0	1	1	0	1	1
1	1	1	0	1	1	0	0	0	1	1	1	0	1
1	1	1	0	1	1	0	0	0	1	1	1	1	1
1	1	1	0	1	1	0	0	1	0	0	0	0	1
1	1	1	0	1	1	0	0	1	0	0	0	1	1
1	1	1	0	1	1	0	0	1	0	0	1	0	1
1	1	1	0	1	1	0	0	1	0	0	1	1	1
1	1	1	0	1	1	0	0	1	0	1	0	0	1
1	1	1	0	1	1	0	0	1	0	1	0	1	1
1	1	1	0	1	1	0	0	1	0	1	1	0	1
1	1	1	0	1	1	0	0	1	0	1	1	1	1
1	1	1	0	1	1	0	0	1	1	0	0	0	1
1	1	1	0	1	1	0	0	1	1	0	0	1	1
1	1	1	0	1	1	0	0	1	1	0	1	0	1
1	1	1	0	1	1	0	0	1	1	0	1	1	1
1	1	1	0	1	1	0	0	1	1	1	0	0	1
1	1	1	0	1	1	0	0	1	1	1	0	1	1
1	1	1	0	1	1	0	0	1	1	1	1	0	1
1	1	1	0	1	1	0	0	1	1	1	1	1	1
1	1	1	0	1	1	0	1	0	0	0	0	0	1
1	1	1	0	1	1	0	1	0	0	0	0	1	1
1	1	1	0	1	1	0	1	0	0	0	1	0	1
1	1	1	0	1	1	0	1	0	0	0	1	1	1
1	1	1	0	1	1	0	1	0	0	1	0	0	1
1	1	1	0	1	1	0	1	0	0	1	0	1	1
1	1	1	0	1	1	0	1	0	0	1	1	0	1
1	1	1	0	1	1	0	1	0	0	1	1	1	1
1	1	1	0	1	1	0	1	0	1	0	0	0	1
1	1	1	0	1	1	0	1	0	1	0	0	1	1
1	1	1	0	1	1	0	1	0	1	0	1	0	1
1	1	1	0	1	1	0	1	0	1	0	1	1	1
1	1	1	0	1	1	0	1	0	1	1	0	0	1
1	1	1	0	1	1	0	1	0	1	1	0	1	1
1	1	1	0	1	1	0	1	0	1	1	1	0	1
1	1	1	0	1	1	0	1	0	1	1	1	1	1
1	1	1	0	1	1	0	1	1	0	0	0	0	1
1	1	1	0	1	1	0	1	1	0	0	0	1	1
1	1	1	0	1	1	0	1	1	0	0	1	0	1

1	1	1	0	1	1	0	1	1	0	0	1	1	1
1	1	1	0	1	1	0	1	1	0	1	0	0	1
1	1	1	0	1	1	0	1	1	0	1	0	1	1
1	1	1	0	1	1	0	1	1	0	1	1	0	1
1	1	1	0	1	1	0	1	1	0	1	1	1	1
1	1	1	0	1	1	0	1	1	1	0	0	0	1
1	1	1	0	1	1	0	1	1	1	0	0	1	1
1	1	1	0	1	1	0	1	1	1	0	1	0	1
1	1	1	0	1	1	0	1	1	1	0	1	1	1
1	1	1	0	1	1	0	1	1	1	1	0	0	1
1	1	1	0	1	1	0	1	1	1	1	0	1	1
1	1	1	0	1	1	0	1	1	1	1	1	0	1
1	1	1	0	1	1	0	1	1	1	1	1	1	1
1	1	1	0	1	1	1	0	0	0	0	0	0	1
1	1	1	0	1	1	1	0	0	0	0	0	1	1
1	1	1	0	1	1	1	0	0	0	0	1	0	1
1	1	1	0	1	1	1	0	0	0	0	1	1	1
1	1	1	0	1	1	1	0	0	0	1	0	0	1
1	1	1	0	1	1	1	0	0	0	1	0	1	1
1	1	1	0	1	1	1	0	0	0	1	1	0	1
1	1	1	0	1	1	1	0	0	0	1	1	1	1
1	1	1	0	1	1	1	0	0	1	0	0	0	1
1	1	1	0	1	1	1	0	0	1	0	0	1	1
1	1	1	0	1	1	1	0	0	1	0	1	0	1
1	1	1	0	1	1	1	0	0	1	0	1	1	1
1	1	1	0	1	1	1	0	0	1	1	0	0	1
1	1	1	0	1	1	1	0	0	1	1	0	1	1
1	1	1	0	1	1	1	0	0	1	1	1	0	1
1	1	1	0	1	1	1	0	0	1	1	1	1	1
1	1	1	0	1	1	1	0	1	0	0	0	0	1
1	1	1	0	1	1	1	0	1	0	0	0	1	1
1	1	1	0	1	1	1	0	1	0	0	1	0	1
1	1	1	0	1	1	1	0	1	0	0	1	1	1
1	1	1	0	1	1	1	0	1	0	1	0	0	1
1	1	1	0	1	1	1	0	1	0	1	0	1	1
1	1	1	0	1	1	1	0	1	0	1	1	0	1
1	1	1	0	1	1	1	0	1	0	1	1	1	1
1	1	1	0	1	1	1	0	1	1	0	0	0	1
1	1	1	0	1	1	1	0	1	1	0	0	1	1
1	1	1	0	1	1	1	0	1	1	0	1	0	1
1	1	1	0	1	1	1	0	1	1	0	1	1	1
1	1	1	0	1	1	1	0	1	1	1	0	0	1
1	1	1	0	1	1	1	0	1	1	1	0	1	1
1	1	1	0	1	1	1	0	1	1	1	1	0	1
1	1	1	0	1	1	1	0	1	1	1	1	1	1
1	1	1	0	1	1	1	1	0	0	1	0	0	1

1	1	1	0	1	1	1	1	0	0	0	0	1	1
1	1	1	0	1	1	1	1	0	0	0	1	0	1
1	1	1	0	1	1	1	1	0	0	0	1	1	1
1	1	1	0	1	1	1	1	0	0	0	0	0	1
1	1	1	0	1	1	1	1	0	0	1	0	1	1
1	1	1	0	1	1	1	1	0	0	1	1	0	1
1	1	1	0	1	1	1	1	0	0	1	1	1	1
1	1	1	0	1	1	1	1	0	1	1	0	0	1
1	1	1	0	1	1	1	1	0	1	0	0	1	1
1	1	1	0	1	1	1	1	0	1	0	1	0	1
1	1	1	0	1	1	1	1	0	1	0	1	1	1
1	1	1	0	1	1	1	1	0	1	0	0	0	1
1	1	1	0	1	1	1	1	0	1	1	0	1	1
1	1	1	0	1	1	1	1	0	1	1	1	0	1
1	1	1	0	1	1	1	1	0	1	1	1	1	1
1	1	1	0	1	1	1	1	1	0	1	0	0	1
1	1	1	0	1	1	1	1	1	0	0	0	1	1
1	1	1	0	1	1	1	1	1	0	0	1	0	1
1	1	1	0	1	1	1	1	1	0	0	1	1	1
1	1	1	0	1	1	1	1	1	0	0	0	0	1
1	1	1	0	1	1	1	1	1	0	1	0	1	1
1	1	1	0	1	1	1	1	1	0	1	1	0	1
1	1	1	0	1	1	1	1	1	0	1	1	1	1
1	1	1	0	1	1	1	1	1	1	1	0	0	1
1	1	1	0	1	1	1	1	1	1	0	0	1	1
1	1	1	0	1	1	1	1	1	1	0	1	0	1
1	1	1	0	1	1	1	1	1	1	0	1	1	1
1	1	1	0	1	1	1	1	1	1	0	0	0	1
1	1	1	0	1	1	1	1	1	1	1	0	1	1
1	1	1	0	1	1	1	1	1	1	1	1	0	1
1	1	1	0	1	1	1	1	1	1	1	1	1	1
1	1	1	1	0	0	0	0	0	0	0	0	0	1
1	1	1	1	0	0	0	0	0	0	0	0	1	1
1	1	1	1	0	0	0	0	0	0	0	1	0	1
1	1	1	1	0	0	0	0	0	0	0	1	1	1
1	1	1	1	0	0	0	0	0	0	1	0	0	1
1	1	1	1	0	0	0	0	0	0	1	0	1	1
1	1	1	1	0	0	0	0	0	0	1	1	0	1
1	1	1	1	0	0	0	0	0	0	1	1	1	1
1	1	1	1	0	0	0	0	0	1	0	0	0	1
1	1	1	1	0	0	0	0	0	1	0	0	1	1
1	1	1	1	0	0	0	0	0	1	0	1	0	1
1	1	1	1	0	0	0	0	0	1	0	1	1	1
1	1	1	1	0	0	0	0	0	1	1	0	0	1
1	1	1	1	0	0	0	0	0	1	1	0	1	1
1	1	1	1	0	0	0	0	0	1	1	1	0	1

1	1	1	1	0	0	0	0	0	1	1	1	1	1
1	1	1	1	0	0	0	0	1	0	0	0	0	1
1	1	1	1	0	0	0	0	1	0	0	0	1	1
1	1	1	1	0	0	0	0	1	0	0	1	0	1
1	1	1	1	0	0	0	0	1	0	0	1	1	1
1	1	1	1	0	0	0	0	1	0	1	0	0	1
1	1	1	1	0	0	0	0	1	0	1	0	1	1
1	1	1	1	0	0	0	0	1	0	1	1	0	1
1	1	1	1	0	0	0	0	1	0	1	1	1	1
1	1	1	1	0	0	0	0	1	1	0	0	0	1
1	1	1	1	0	0	0	0	1	1	0	0	1	1
1	1	1	1	0	0	0	0	1	1	0	1	0	1
1	1	1	1	0	0	0	0	1	1	0	1	1	1
1	1	1	1	0	0	0	0	1	1	1	0	0	1
1	1	1	1	0	0	0	0	1	1	1	0	1	1
1	1	1	1	0	0	0	0	1	1	1	1	0	1
1	1	1	1	0	0	0	0	1	1	1	1	1	1
1	1	1	1	0	0	0	1	0	0	0	0	0	1
1	1	1	1	0	0	0	1	0	0	0	0	1	1
1	1	1	1	0	0	0	1	0	0	0	1	0	1
1	1	1	1	0	0	0	1	0	0	0	1	1	1
1	1	1	1	0	0	0	1	0	0	1	0	0	1
1	1	1	1	0	0	0	1	0	0	1	0	1	1
1	1	1	1	0	0	0	1	0	0	1	1	0	1
1	1	1	1	0	0	0	1	0	0	1	1	1	1
1	1	1	1	0	0	0	1	0	1	0	0	0	1
1	1	1	1	0	0	0	1	0	1	0	0	1	1
1	1	1	1	0	0	0	1	0	1	0	1	0	1
1	1	1	1	0	0	0	1	0	1	0	1	1	1
1	1	1	1	0	0	0	1	0	1	1	0	0	1
1	1	1	1	0	0	0	1	0	1	1	0	1	1
1	1	1	1	0	0	0	1	0	1	1	1	0	1
1	1	1	1	0	0	0	1	0	1	1	1	1	1
1	1	1	1	0	0	0	1	1	0	0	0	0	1
1	1	1	1	0	0	0	1	1	0	0	0	1	1
1	1	1	1	0	0	0	1	1	0	0	1	0	1
1	1	1	1	0	0	0	1	1	0	0	1	1	1
1	1	1	1	0	0	0	1	1	0	1	0	0	1
1	1	1	1	0	0	0	1	1	0	1	0	1	1
1	1	1	1	0	0	0	1	1	0	1	1	0	1
1	1	1	1	0	0	0	1	1	0	1	1	1	1
1	1	1	1	0	0	0	1	1	1	0	0	0	1
1	1	1	1	0	0	0	1	1	1	0	0	1	1
1	1	1	1	0	0	0	1	1	1	0	1	0	1
1	1	1	1	0	0	0	1	1	1	0	1	1	1
1	1	1	1	0	0	0	1	1	1	1	0	0	1

1	1	1	1	0	0	0	1	1	1	1	0	1	1
1	1	1	1	0	0	0	1	1	1	1	1	0	1
1	1	1	1	0	0	0	1	1	1	1	1	1	1
1	1	1	1	0	0	1	0	0	0	0	0	0	1
1	1	1	1	0	0	1	0	0	0	0	0	1	1
1	1	1	1	0	0	1	0	0	0	0	1	0	1
1	1	1	1	0	0	1	0	0	0	0	1	1	1
1	1	1	1	0	0	1	0	0	0	1	0	0	1
1	1	1	1	0	0	1	0	0	0	1	0	1	1
1	1	1	1	0	0	1	0	0	0	1	1	0	1
1	1	1	1	0	0	1	0	0	0	1	1	1	1
1	1	1	1	0	0	1	0	0	1	0	0	0	1
1	1	1	1	0	0	1	0	0	1	0	0	1	1
1	1	1	1	0	0	1	0	0	1	0	1	0	1
1	1	1	1	0	0	1	0	0	1	0	1	1	1
1	1	1	1	0	0	1	0	0	1	1	0	0	1
1	1	1	1	0	0	1	0	0	1	1	0	1	1
1	1	1	1	0	0	1	0	0	1	1	1	0	1
1	1	1	1	0	0	1	0	0	1	1	1	1	1
1	1	1	1	0	0	1	0	1	0	0	0	0	1
1	1	1	1	0	0	1	0	1	0	0	0	1	1
1	1	1	1	0	0	1	0	1	0	0	1	0	1
1	1	1	1	0	0	1	0	1	0	0	1	1	1
1	1	1	1	0	0	1	0	1	0	1	0	0	1
1	1	1	1	0	0	1	0	1	0	1	0	1	1
1	1	1	1	0	0	1	0	1	0	1	1	0	1
1	1	1	1	0	0	1	0	1	0	1	1	1	1
1	1	1	1	0	0	1	0	1	1	0	0	0	1
1	1	1	1	0	0	1	0	1	1	0	0	1	1
1	1	1	1	0	0	1	0	1	1	0	1	0	1
1	1	1	1	0	0	1	0	1	1	0	1	1	1
1	1	1	1	0	0	1	0	1	1	1	0	0	1
1	1	1	1	0	0	1	0	1	1	1	0	1	1
1	1	1	1	0	0	1	0	1	1	1	1	0	1
1	1	1	1	0	0	1	0	1	1	1	1	1	1
1	1	1	1	0	0	1	1	0	0	0	0	0	1
1	1	1	1	0	0	1	1	0	0	0	0	1	1
1	1	1	1	0	0	1	1	0	0	0	1	0	1
1	1	1	1	0	0	1	1	0	0	0	1	1	1
1	1	1	1	0	0	1	1	0	0	1	0	0	1
1	1	1	1	0	0	1	1	0	0	1	0	1	1
1	1	1	1	0	0	1	1	0	0	1	1	0	1
1	1	1	1	0	0	1	1	0	0	1	1	1	1
1	1	1	1	0	0	1	1	0	1	0	0	0	1
1	1	1	1	0	0	1	1	0	1	0	0	1	1
1	1	1	1	0	0	1	1	0	1	0	1	0	1

1	1	1	1	0	0	1	1	0	1	0	1	1	1
1	1	1	1	0	0	1	1	0	1	1	0	0	1
1	1	1	1	0	0	1	1	0	1	1	0	1	1
1	1	1	1	0	0	1	1	0	1	1	1	0	1
1	1	1	1	0	0	1	1	0	1	1	1	1	1
1	1	1	1	0	0	1	1	1	0	0	0	0	1
1	1	1	1	0	0	1	1	1	0	0	0	1	1
1	1	1	1	0	0	1	1	1	0	0	1	0	1
1	1	1	1	0	0	1	1	1	0	0	1	1	1
1	1	1	1	0	0	1	1	1	0	1	0	0	1
1	1	1	1	0	0	1	1	1	0	1	0	1	1
1	1	1	1	0	0	1	1	1	0	1	1	0	1
1	1	1	1	0	0	1	1	1	0	1	1	1	1
1	1	1	1	0	0	1	1	1	1	0	0	0	1
1	1	1	1	0	0	1	1	1	1	0	0	1	1
1	1	1	1	0	0	1	1	1	1	0	1	0	1
1	1	1	1	0	0	1	1	1	1	0	1	1	1
1	1	1	1	0	0	1	1	1	1	1	0	0	1
1	1	1	1	0	0	1	1	1	1	1	0	1	1
1	1	1	1	0	0	1	1	1	1	1	1	0	1
1	1	1	1	0	0	1	1	1	1	1	1	1	1
1	1	1	1	0	1	0	0	0	0	0	0	0	1
1	1	1	1	0	1	0	0	0	0	0	0	1	1
1	1	1	1	0	1	0	0	0	0	0	1	0	1
1	1	1	1	0	1	0	0	0	0	0	1	1	1
1	1	1	1	0	1	0	0	0	0	1	0	0	1
1	1	1	1	0	1	0	0	0	0	1	0	1	1
1	1	1	1	0	1	0	0	0	0	1	1	0	1
1	1	1	1	0	1	0	0	0	0	1	1	1	1
1	1	1	1	0	1	0	0	0	1	0	0	0	1
1	1	1	1	0	1	0	0	0	1	0	0	1	1
1	1	1	1	0	1	0	0	0	1	0	1	0	1
1	1	1	1	0	1	0	0	0	1	0	1	1	1
1	1	1	1	0	1	0	0	0	1	1	0	0	1
1	1	1	1	0	1	0	0	0	1	1	0	1	1
1	1	1	1	0	1	0	0	0	1	1	1	0	1
1	1	1	1	0	1	0	0	0	1	1	1	1	1
1	1	1	1	0	1	0	0	1	0	0	0	0	1
1	1	1	1	0	1	0	0	1	0	0	0	1	1
1	1	1	1	0	1	0	0	1	0	0	1	0	1
1	1	1	1	0	1	0	0	1	0	0	1	1	1
1	1	1	1	0	1	0	0	1	0	1	0	0	1
1	1	1	1	0	1	0	0	1	0	1	0	1	1
1	1	1	1	0	1	0	0	1	0	1	1	0	1
1	1	1	1	0	1	0	0	1	0	1	1	1	1
1	1	1	1	0	1	0	0	1	1	0	0	0	1

1	1	1	1	0	1	0	0	1	1	0	0	1	1
1	1	1	1	0	1	0	0	1	1	0	1	0	1
1	1	1	1	0	1	0	0	1	1	0	1	1	1
1	1	1	1	0	1	0	0	1	1	1	0	0	1
1	1	1	1	0	1	0	0	1	1	1	0	1	1
1	1	1	1	0	1	0	0	1	1	1	1	0	1
1	1	1	1	0	1	0	0	1	1	1	1	1	1
1	1	1	1	0	1	0	1	0	0	0	0	0	1
1	1	1	1	0	1	0	1	0	0	0	0	1	1
1	1	1	1	0	1	0	1	0	0	0	1	0	1
1	1	1	1	0	1	0	1	0	0	0	1	1	1
1	1	1	1	0	1	0	1	0	0	1	0	0	1
1	1	1	1	0	1	0	1	0	0	1	0	1	1
1	1	1	1	0	1	0	1	0	0	1	1	0	1
1	1	1	1	0	1	0	1	0	0	1	1	1	1
1	1	1	1	0	1	0	1	0	1	0	0	0	1
1	1	1	1	0	1	0	1	0	1	0	0	1	1
1	1	1	1	0	1	0	1	0	1	0	1	0	1
1	1	1	1	0	1	0	1	0	1	0	1	1	1
1	1	1	1	0	1	0	1	0	1	1	0	0	1
1	1	1	1	0	1	0	1	0	1	1	0	1	1
1	1	1	1	0	1	0	1	0	1	1	1	0	1
1	1	1	1	0	1	0	1	0	1	1	1	1	1
1	1	1	1	0	1	0	1	1	0	0	0	0	1
1	1	1	1	0	1	0	1	1	0	0	0	1	1
1	1	1	1	0	1	0	1	1	0	0	1	0	1
1	1	1	1	0	1	0	1	1	0	0	1	1	1
1	1	1	1	0	1	0	1	1	0	1	0	0	1
1	1	1	1	0	1	0	1	1	0	1	0	1	1
1	1	1	1	0	1	0	1	1	0	1	1	0	1
1	1	1	1	0	1	0	1	1	0	1	1	1	1
1	1	1	1	0	1	0	1	1	1	0	0	0	1
1	1	1	1	0	1	0	1	1	1	0	0	1	1
1	1	1	1	0	1	0	1	1	1	0	1	0	1
1	1	1	1	0	1	0	1	1	1	0	1	1	1
1	1	1	1	0	1	0	1	1	1	1	0	0	1
1	1	1	1	0	1	0	1	1	1	1	0	1	1
1	1	1	1	0	1	0	1	1	1	1	1	0	1
1	1	1	1	0	1	0	1	1	1	1	1	1	1
1	1	1	1	0	1	1	0	0	0	0	0	0	1
1	1	1	1	0	1	1	0	0	0	0	0	1	1
1	1	1	1	0	1	1	0	0	0	0	1	0	1
1	1	1	1	0	1	1	0	0	0	0	1	1	1
1	1	1	1	0	1	1	0	0	0	1	0	0	1
1	1	1	1	0	1	1	0	0	0	1	0	1	1
1	1	1	1	0	1	1	0	0	0	1	1	0	1

1	1	1	1	0	1	1	0	0	0	1	1	1	1
1	1	1	1	0	1	1	0	0	1	0	0	0	1
1	1	1	1	0	1	1	0	0	1	0	0	1	1
1	1	1	1	0	1	1	0	0	1	0	1	0	1
1	1	1	1	0	1	1	0	0	1	0	1	1	1
1	1	1	1	0	1	1	0	0	1	1	0	0	1
1	1	1	1	0	1	1	0	0	1	1	0	1	1
1	1	1	1	0	1	1	0	0	1	1	1	0	1
1	1	1	1	0	1	1	0	0	1	1	1	1	1
1	1	1	1	0	1	1	0	1	0	0	0	0	1
1	1	1	1	0	1	1	0	1	0	0	0	1	1
1	1	1	1	0	1	1	0	1	0	0	1	0	1
1	1	1	1	0	1	1	0	1	0	0	1	1	1
1	1	1	1	0	1	1	0	1	0	1	0	0	1
1	1	1	1	0	1	1	0	1	0	1	0	1	1
1	1	1	1	0	1	1	0	1	0	1	1	0	1
1	1	1	1	0	1	1	0	1	0	1	1	1	1
1	1	1	1	0	1	1	0	1	1	0	0	0	1
1	1	1	1	0	1	1	0	1	1	0	0	1	1
1	1	1	1	0	1	1	0	1	1	0	1	0	1
1	1	1	1	0	1	1	0	1	1	0	1	1	1
1	1	1	1	0	1	1	0	1	1	1	0	0	1
1	1	1	1	0	1	1	0	1	1	1	0	1	1
1	1	1	1	0	1	1	0	1	1	1	1	0	1
1	1	1	1	0	1	1	0	1	1	1	1	1	1
1	1	1	1	0	1	1	1	0	0	1	0	0	1
1	1	1	1	0	1	1	1	0	0	0	0	1	1
1	1	1	1	0	1	1	1	0	0	0	1	0	1
1	1	1	1	0	1	1	1	0	0	0	1	1	1
1	1	1	1	0	1	1	1	0	0	0	0	0	1
1	1	1	1	0	1	1	1	0	0	1	0	1	1
1	1	1	1	0	1	1	1	0	0	1	1	0	1
1	1	1	1	0	1	1	1	0	0	1	1	1	1
1	1	1	1	0	1	1	1	0	1	1	0	0	1
1	1	1	1	0	1	1	1	0	1	0	0	1	1
1	1	1	1	0	1	1	1	0	1	0	1	0	1
1	1	1	1	0	1	1	1	0	1	0	1	1	1
1	1	1	1	0	1	1	1	0	1	0	0	0	1
1	1	1	1	0	1	1	1	0	1	1	0	1	1
1	1	1	1	0	1	1	1	0	1	1	1	0	1
1	1	1	1	0	1	1	1	0	1	1	1	1	1
1	1	1	1	0	1	1	1	1	0	1	0	0	1
1	1	1	1	0	1	1	1	1	0	0	0	1	1
1	1	1	1	0	1	1	1	1	0	0	1	0	1
1	1	1	1	0	1	1	1	1	0	0	1	1	1
1	1	1	1	0	1	1	1	1	0	0	1	1	1
1	1	1	1	0	1	1	1	1	0	0	0	0	1

1	1	1	1	0	1	1	1	1	0	1	0	1	1
1	1	1	1	0	1	1	1	1	0	1	1	0	1
1	1	1	1	0	1	1	1	1	0	1	1	1	1
1	1	1	1	0	1	1	1	1	1	1	0	0	1
1	1	1	1	0	1	1	1	1	1	0	0	1	1
1	1	1	1	0	1	1	1	1	1	0	1	0	1
1	1	1	1	0	1	1	1	1	1	0	1	1	1
1	1	1	1	0	1	1	1	1	1	0	0	0	1
1	1	1	1	0	1	1	1	1	1	1	0	1	1
1	1	1	1	0	1	1	1	1	1	1	1	0	1
1	1	1	1	0	1	1	1	1	1	1	1	1	1
1	1	1	1	1	0	0	0	0	0	0	0	0	1
1	1	1	1	1	0	0	0	0	0	0	0	1	1
1	1	1	1	1	0	0	0	0	0	0	1	0	1
1	1	1	1	1	0	0	0	0	0	0	1	1	1
1	1	1	1	1	0	0	0	0	0	1	0	0	1
1	1	1	1	1	0	0	0	0	0	1	0	1	1
1	1	1	1	1	0	0	0	0	0	1	1	0	1
1	1	1	1	1	0	0	0	0	0	1	1	1	1
1	1	1	1	1	0	0	0	0	1	0	0	0	1
1	1	1	1	1	0	0	0	0	1	0	0	1	1
1	1	1	1	1	0	0	0	0	1	0	1	0	1
1	1	1	1	1	0	0	0	0	1	0	1	1	1
1	1	1	1	1	0	0	0	0	1	1	0	0	1
1	1	1	1	1	0	0	0	0	1	1	0	1	1
1	1	1	1	1	0	0	0	0	1	1	1	0	1
1	1	1	1	1	0	0	0	0	1	1	1	1	1
1	1	1	1	1	0	0	0	1	0	0	0	0	1
1	1	1	1	1	0	0	0	1	0	0	0	1	1
1	1	1	1	1	0	0	0	1	0	0	1	0	1
1	1	1	1	1	0	0	0	1	0	0	1	1	1
1	1	1	1	1	0	0	0	1	0	1	0	0	1
1	1	1	1	1	0	0	0	1	0	1	0	1	1
1	1	1	1	1	0	0	0	1	0	1	1	0	1
1	1	1	1	1	0	0	0	1	0	1	1	1	1
1	1	1	1	1	0	0	0	1	1	0	0	0	1
1	1	1	1	1	0	0	0	1	1	0	0	1	1
1	1	1	1	1	0	0	0	1	1	0	1	0	1
1	1	1	1	1	0	0	0	1	1	0	1	1	1
1	1	1	1	1	0	0	0	1	1	1	0	0	1
1	1	1	1	1	0	0	0	1	1	1	0	1	1
1	1	1	1	1	0	0	0	1	1	1	1	0	1
1	1	1	1	1	0	0	0	1	1	1	1	1	1
1	1	1	1	1	0	0	1	0	0	0	0	0	1
1	1	1	1	1	0	0	1	0	0	0	0	1	1
1	1	1	1	1	0	0	1	0	0	0	1	0	1

1	1	1	1	1	0	0	1	0	0	0	1	1	1
1	1	1	1	1	0	0	1	0	0	1	0	0	1
1	1	1	1	1	0	0	1	0	0	1	0	1	1
1	1	1	1	1	0	0	1	0	0	1	1	0	1
1	1	1	1	1	0	0	1	0	0	1	1	1	1
1	1	1	1	1	0	0	1	0	1	0	0	0	1
1	1	1	1	1	0	0	1	0	1	0	0	1	1
1	1	1	1	1	0	0	1	0	1	0	1	0	1
1	1	1	1	1	0	0	1	0	1	0	1	1	1
1	1	1	1	1	0	0	1	0	1	1	0	0	1
1	1	1	1	1	0	0	1	0	1	1	0	1	1
1	1	1	1	1	0	0	1	0	1	1	1	0	1
1	1	1	1	1	0	0	1	0	1	1	1	1	1
1	1	1	1	1	0	0	1	1	0	0	0	0	1
1	1	1	1	1	0	0	1	1	0	0	0	1	1
1	1	1	1	1	0	0	1	1	0	0	1	0	1
1	1	1	1	1	0	0	1	1	0	0	1	1	1
1	1	1	1	1	0	0	1	1	0	1	0	0	1
1	1	1	1	1	0	0	1	1	0	1	0	1	1
1	1	1	1	1	0	0	1	1	0	1	1	0	1
1	1	1	1	1	0	0	1	1	0	1	1	1	1
1	1	1	1	1	0	0	1	1	1	0	0	0	1
1	1	1	1	1	0	0	1	1	1	0	0	1	1
1	1	1	1	1	0	0	1	1	1	0	1	0	1
1	1	1	1	1	0	0	1	1	1	0	1	1	1
1	1	1	1	1	0	0	1	1	1	1	0	0	1
1	1	1	1	1	0	0	1	1	1	1	0	1	1
1	1	1	1	1	0	0	1	1	1	1	1	0	1
1	1	1	1	1	0	0	1	1	1	1	1	1	1
1	1	1	1	1	0	1	0	0	0	0	0	0	1
1	1	1	1	1	0	1	0	0	0	0	0	1	1
1	1	1	1	1	0	1	0	0	0	0	1	0	1
1	1	1	1	1	0	1	0	0	0	0	1	1	1
1	1	1	1	1	0	1	0	0	0	1	0	0	1
1	1	1	1	1	0	1	0	0	0	1	0	1	1
1	1	1	1	1	0	1	0	0	0	1	1	0	1
1	1	1	1	1	0	1	0	0	0	1	1	1	1
1	1	1	1	1	0	1	0	0	1	0	0	0	1
1	1	1	1	1	0	1	0	0	1	0	0	1	1
1	1	1	1	1	0	1	0	0	1	0	1	0	1
1	1	1	1	1	0	1	0	0	1	0	1	1	1
1	1	1	1	1	0	1	0	0	1	1	0	0	1
1	1	1	1	1	0	1	0	0	1	1	0	1	1
1	1	1	1	1	0	1	0	0	1	1	1	0	1
1	1	1	1	1	0	1	0	0	1	1	1	1	1
1	1	1	1	1	0	1	0	1	0	0	0	0	1

1	1	1	1	1	0	1	0	1	0	0	0	1	1
1	1	1	1	1	0	1	0	1	0	0	1	0	1
1	1	1	1	1	0	1	0	1	0	0	1	1	1
1	1	1	1	1	0	1	0	1	0	1	0	0	1
1	1	1	1	1	0	1	0	1	0	1	0	1	1
1	1	1	1	1	0	1	0	1	0	1	1	0	1
1	1	1	1	1	0	1	0	1	0	1	1	1	1
1	1	1	1	1	0	1	0	1	1	0	0	0	1
1	1	1	1	1	0	1	0	1	1	0	0	1	1
1	1	1	1	1	0	1	0	1	1	0	1	0	1
1	1	1	1	1	0	1	0	1	1	0	1	1	1
1	1	1	1	1	0	1	0	1	1	1	0	0	1
1	1	1	1	1	0	1	0	1	1	1	0	1	1
1	1	1	1	1	0	1	0	1	1	1	1	0	1
1	1	1	1	1	0	1	0	1	1	1	1	1	1
1	1	1	1	1	0	1	1	0	0	0	0	0	1
1	1	1	1	1	0	1	1	0	0	0	0	1	1
1	1	1	1	1	0	1	1	0	0	0	1	0	1
1	1	1	1	1	0	1	1	0	0	0	1	1	1
1	1	1	1	1	0	1	1	0	0	1	0	0	1
1	1	1	1	1	0	1	1	0	0	1	0	1	1
1	1	1	1	1	0	1	1	0	0	1	1	0	1
1	1	1	1	1	0	1	1	0	0	1	1	1	1
1	1	1	1	1	0	1	1	0	1	0	0	0	1
1	1	1	1	1	0	1	1	0	1	0	0	1	1
1	1	1	1	1	0	1	1	0	1	0	1	0	1
1	1	1	1	1	0	1	1	0	1	0	1	1	1
1	1	1	1	1	0	1	1	0	1	1	0	0	1
1	1	1	1	1	0	1	1	0	1	1	0	1	1
1	1	1	1	1	0	1	1	0	1	1	1	0	1
1	1	1	1	1	0	1	1	0	1	1	1	1	1
1	1	1	1	1	0	1	1	1	0	0	0	0	1
1	1	1	1	1	0	1	1	1	0	0	0	1	1
1	1	1	1	1	0	1	1	1	0	0	1	0	1
1	1	1	1	1	0	1	1	1	0	0	1	1	1
1	1	1	1	1	0	1	1	1	0	1	0	0	1
1	1	1	1	1	0	1	1	1	0	1	0	1	1
1	1	1	1	1	0	1	1	1	0	1	1	0	1
1	1	1	1	1	0	1	1	1	0	1	1	1	1
1	1	1	1	1	0	1	1	1	1	0	0	0	1
1	1	1	1	1	0	1	1	1	1	0	0	1	1
1	1	1	1	1	0	1	1	1	1	0	1	0	1
1	1	1	1	1	0	1	1	1	1	0	1	1	1
1	1	1	1	1	0	1	1	1	1	1	0	0	1
1	1	1	1	1	0	1	1	1	1	1	0	1	1
1	1	1	1	1	0	1	1	1	1	1	1	0	1

1	1	1	1	1	0	1	1	1	1	1	1	1	1
1	1	1	1	1	1	0	0	0	0	0	0	0	1
1	1	1	1	1	1	0	0	0	0	0	0	1	1
1	1	1	1	1	1	0	0	0	0	0	1	0	1
1	1	1	1	1	1	0	0	0	0	0	1	1	1
1	1	1	1	1	1	0	0	0	0	1	0	0	1
1	1	1	1	1	1	0	0	0	0	1	0	1	1
1	1	1	1	1	1	0	0	0	0	1	1	0	1
1	1	1	1	1	1	0	0	0	0	1	1	1	1
1	1	1	1	1	1	0	0	0	1	0	0	0	1
1	1	1	1	1	1	0	0	0	1	0	0	1	1
1	1	1	1	1	1	0	0	0	1	0	1	0	1
1	1	1	1	1	1	0	0	0	1	0	1	1	1
1	1	1	1	1	1	0	0	0	1	1	0	0	1
1	1	1	1	1	1	0	0	0	1	1	0	1	1
1	1	1	1	1	1	0	0	0	1	1	1	0	1
1	1	1	1	1	1	0	0	0	1	1	1	1	1
1	1	1	1	1	1	0	0	1	0	0	0	0	1
1	1	1	1	1	1	0	0	1	0	0	0	1	1
1	1	1	1	1	1	0	0	1	0	0	1	0	1
1	1	1	1	1	1	0	0	1	0	0	1	1	1
1	1	1	1	1	1	0	0	1	0	1	0	0	1
1	1	1	1	1	1	0	0	1	0	1	0	1	1
1	1	1	1	1	1	0	0	1	0	1	1	0	1
1	1	1	1	1	1	0	0	1	0	1	1	1	1
1	1	1	1	1	1	0	0	1	1	0	0	0	1
1	1	1	1	1	1	0	0	1	1	0	0	1	1
1	1	1	1	1	1	0	0	1	1	0	1	0	1
1	1	1	1	1	1	0	0	1	1	0	1	1	1
1	1	1	1	1	1	0	0	1	1	1	0	0	1
1	1	1	1	1	1	0	0	1	1	1	0	1	1
1	1	1	1	1	1	0	0	1	1	1	1	0	1
1	1	1	1	1	1	0	0	1	1	1	1	1	1
1	1	1	1	1	1	0	1	0	0	0	0	0	1
1	1	1	1	1	1	0	1	0	0	0	0	1	1
1	1	1	1	1	1	0	1	0	0	0	1	0	1
1	1	1	1	1	1	0	1	0	0	0	1	1	1
1	1	1	1	1	1	0	1	0	0	1	0	0	1
1	1	1	1	1	1	0	1	0	0	1	0	1	1
1	1	1	1	1	1	0	1	0	0	1	1	0	1
1	1	1	1	1	1	0	1	0	0	1	1	1	1
1	1	1	1	1	1	0	1	0	1	0	0	0	1
1	1	1	1	1	1	0	1	0	1	0	0	1	1
1	1	1	1	1	1	0	1	0	1	0	1	0	1
1	1	1	1	1	1	0	1	0	1	0	1	1	1
1	1	1	1	1	1	0	1	0	1	1	0	0	1

1	1	1	1	1	1	0	1	0	1	1	0	1	1
1	1	1	1	1	1	0	1	0	1	1	1	0	1
1	1	1	1	1	1	0	1	0	1	1	1	1	1
1	1	1	1	1	1	0	1	1	0	0	0	0	1
1	1	1	1	1	1	0	1	1	0	0	0	1	1
1	1	1	1	1	1	0	1	1	0	0	1	0	1
1	1	1	1	1	1	0	1	1	0	0	1	1	1
1	1	1	1	1	1	0	1	1	0	1	0	0	1
1	1	1	1	1	1	0	1	1	0	1	0	1	1
1	1	1	1	1	1	0	1	1	0	1	1	0	1
1	1	1	1	1	1	0	1	1	0	1	1	1	1
1	1	1	1	1	1	0	1	1	1	0	0	0	1
1	1	1	1	1	1	0	1	1	1	0	0	1	1
1	1	1	1	1	1	0	1	1	1	0	1	0	1
1	1	1	1	1	1	0	1	1	1	0	1	1	1
1	1	1	1	1	1	0	1	1	1	1	0	0	1
1	1	1	1	1	1	0	1	1	1	1	0	1	1
1	1	1	1	1	1	0	1	1	1	1	1	0	1
1	1	1	1	1	1	0	1	1	1	1	1	1	1
1	1	1	1	1	1	1	0	0	0	0	0	0	1
1	1	1	1	1	1	1	0	0	0	0	0	1	1
1	1	1	1	1	1	1	0	0	0	0	1	0	1
1	1	1	1	1	1	1	0	0	0	0	1	1	1
1	1	1	1	1	1	1	0	0	0	1	0	0	1
1	1	1	1	1	1	1	0	0	0	1	0	1	1
1	1	1	1	1	1	1	0	0	0	1	1	0	1
1	1	1	1	1	1	1	0	0	0	1	1	1	1
1	1	1	1	1	1	1	0	0	1	0	0	0	1
1	1	1	1	1	1	1	0	0	1	0	0	1	1
1	1	1	1	1	1	1	0	0	1	0	1	0	1
1	1	1	1	1	1	1	0	0	1	0	1	1	1
1	1	1	1	1	1	1	0	0	1	1	0	0	1
1	1	1	1	1	1	1	0	0	1	1	0	1	1
1	1	1	1	1	1	1	0	0	1	1	1	0	1
1	1	1	1	1	1	1	0	0	1	1	1	1	1
1	1	1	1	1	1	1	0	1	0	0	0	0	1
1	1	1	1	1	1	1	0	1	0	0	0	1	1
1	1	1	1	1	1	1	0	1	0	0	1	0	1
1	1	1	1	1	1	1	0	1	0	0	1	1	1
1	1	1	1	1	1	1	0	1	0	1	0	0	1
1	1	1	1	1	1	1	0	1	0	1	0	1	1
1	1	1	1	1	1	1	0	1	0	1	1	0	1
1	1	1	1	1	1	1	0	1	0	1	1	1	1
1	1	1	1	1	1	1	0	1	1	0	0	0	1
1	1	1	1	1	1	1	0	1	1	0	0	1	1
1	1	1	1	1	1	1	0	1	1	0	1	0	1

1	1	1	1	1	1	1	0	1	1	0	1	1	1
1	1	1	1	1	1	1	0	1	1	1	0	0	1
1	1	1	1	1	1	1	0	1	1	1	0	1	1
1	1	1	1	1	1	1	0	1	1	1	1	0	1
1	1	1	1	1	1	1	0	1	1	1	1	1	1
1	1	1	1	1	1	1	1	0	0	1	0	0	1
1	1	1	1	1	1	1	1	0	0	0	0	1	1
1	1	1	1	1	1	1	1	0	0	0	1	0	1
1	1	1	1	1	1	1	1	0	0	0	1	1	1
1	1	1	1	1	1	1	1	0	0	0	0	0	1
1	1	1	1	1	1	1	1	0	0	1	0	1	1
1	1	1	1	1	1	1	1	0	0	1	1	0	1
1	1	1	1	1	1	1	1	0	0	1	1	1	1
1	1	1	1	1	1	1	1	0	1	1	0	0	1
1	1	1	1	1	1	1	1	0	1	0	0	1	1
1	1	1	1	1	1	1	1	0	1	0	1	0	1
1	1	1	1	1	1	1	1	0	1	0	1	1	1
1	1	1	1	1	1	1	1	0	1	0	0	0	1
1	1	1	1	1	1	1	1	0	1	1	0	1	1
1	1	1	1	1	1	1	1	0	1	1	1	0	1
1	1	1	1	1	1	1	1	0	1	1	1	1	1
1	1	1	1	1	1	1	1	1	0	1	0	0	1
1	1	1	1	1	1	1	1	1	0	0	0	1	1
1	1	1	1	1	1	1	1	1	0	0	1	0	1
1	1	1	1	1	1	1	1	1	0	0	1	1	1
1	1	1	1	1	1	1	1	1	0	0	0	0	1
1	1	1	1	1	1	1	1	1	0	1	0	1	1
1	1	1	1	1	1	1	1	1	0	1	1	0	1
1	1	1	1	1	1	1	1	1	0	1	1	1	1
1	1	1	1	1	1	1	1	1	1	1	0	0	1
1	1	1	1	1	1	1	1	1	1	0	0	1	1
1	1	1	1	1	1	1	1	1	1	0	1	0	1
1	1	1	1	1	1	1	1	1	1	0	1	1	1
1	1	1	1	1	1	1	1	1	1	0	0	0	1
1	1	1	1	1	1	1	1	1	1	1	0	1	1
1	1	1	1	1	1	1	1	1	1	1	1	0	1
1	1	1	1	1	1	1	1	1	1	1	1	1	0